GONWUM

VER. 13.00

PRODUCTS CATALOG

Open up the Frontier by CONVUM

INDEX

01 CONVUM

02 Suction Cup

03 Other Equipment for Vacuum

04 Pressure Sensor

05 Non-contact Transfer Equipment

06 Vacuum Switching Valve

07 Other Pneumatic Equipment

How to Use Catalog	P.011
Safety Instructions	P.012
Common Precautions	P.013
Warranty and Disclaimer	P.018
Model Change or Discontinued Model	P.617
Product Index	P.619
Technical Terms	P.621
Network	P.627

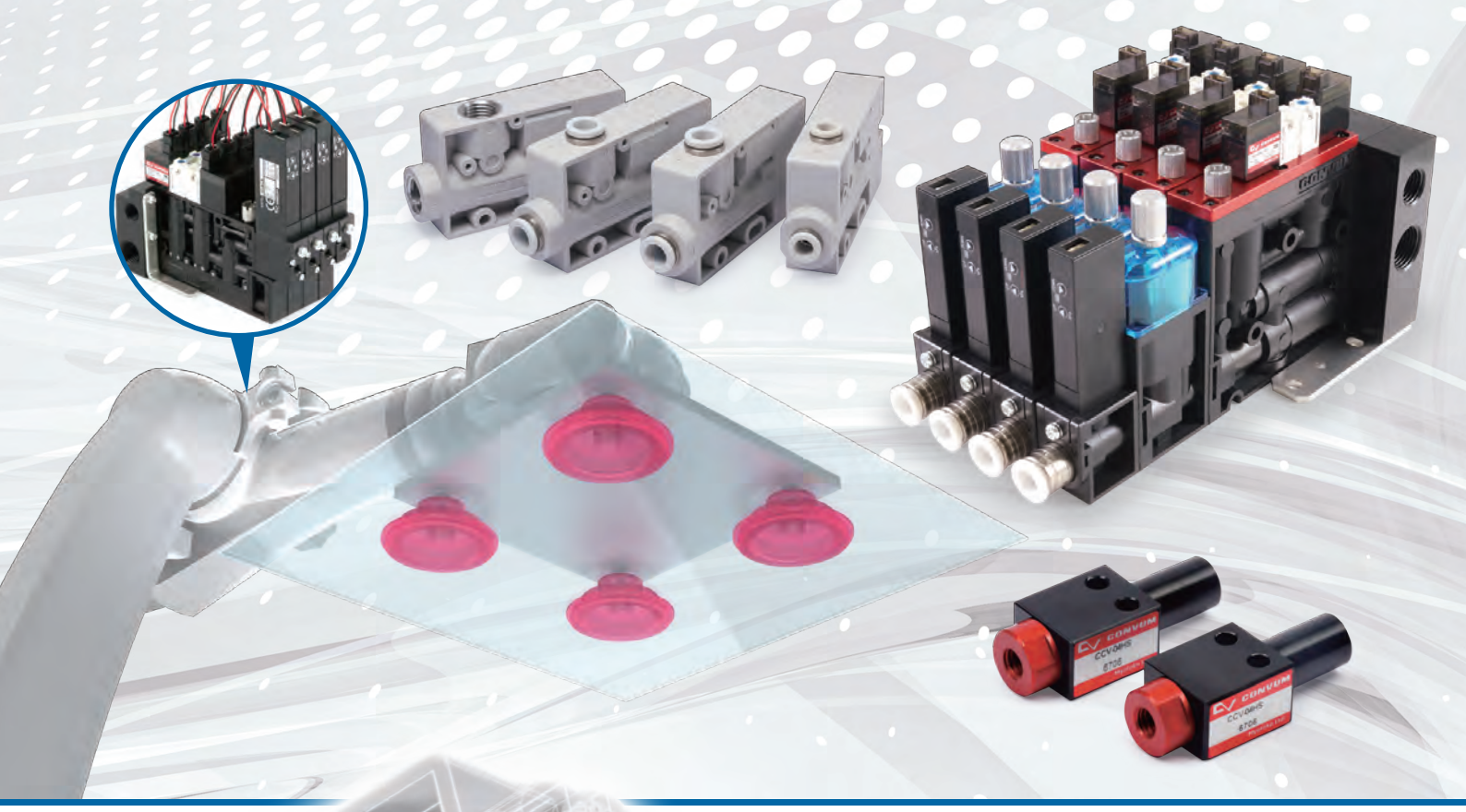

What is CONVUM ?

CONVUM is a registered trademark of Myotoku Ltd.
CONVUM is a vacuum generator that uses compressed air to generate suction (negative pressure).
Compressed air is released (ejected) from the nozzle, therefore earning the name “ejector” or “ejector pump”.

CONVUM (Vacuum ejector) principle

1. Compressed air is supplied to supply port and pass through the nozzle.
2. Compressed air flows into the diffusion chamber at high speed and is ejected in the diffuser.
3. Due to the high speed air flow, it creates a pressure drop (Bernoulli's principle) and air flows from the vacuum port (vacuum generation).
4. Both compressed air from vacuum port are mixed and exhausted through the diffuser.

As described in the right picture, there is no moving part in simple constructed ejector. The benefit is along life circle.

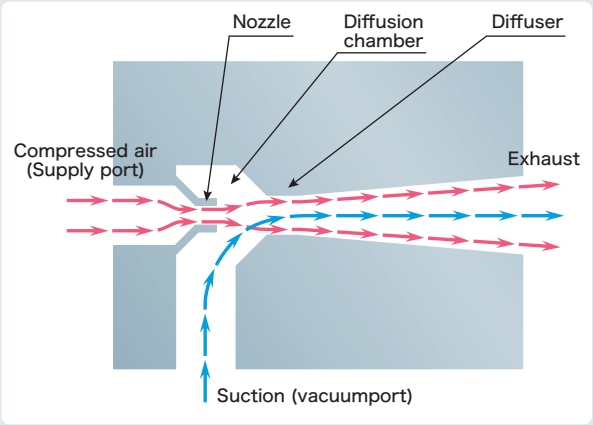

01 CONVUM (Vacuum ejector system)

Line up the vacuum generation expert

Compact Energy-saving CONVUM
SC1 Series
P.035

High Speed CONVUM
SC2 Series
P.047

Medium Size Smart CONVUM
SC3 Series
P.057

20mm Width CONVUM
MC22 Series
P.073

High Vacuum Flow CONVUM
MC72 Series
P.085

Miniature CONVUM
CCV Series
P.099

Standard Resin CONVUM
MCV Series
P.101

Standard CONVUM
CV Series
P.107

Modular Type CONVUM
CVA2 Series
P.117

Energy-saving Mechanical CONVUM
EC1 Series
P.129

Push-in Connector CONVUM
MCA Series
P.135

High Vacuum Level CONVUM
HDV Series
P.143

High Vacuum Suction CONVUM
HFV Series
P.147

Big Vacuum Flow CONVUM
CVZ Series
P.151

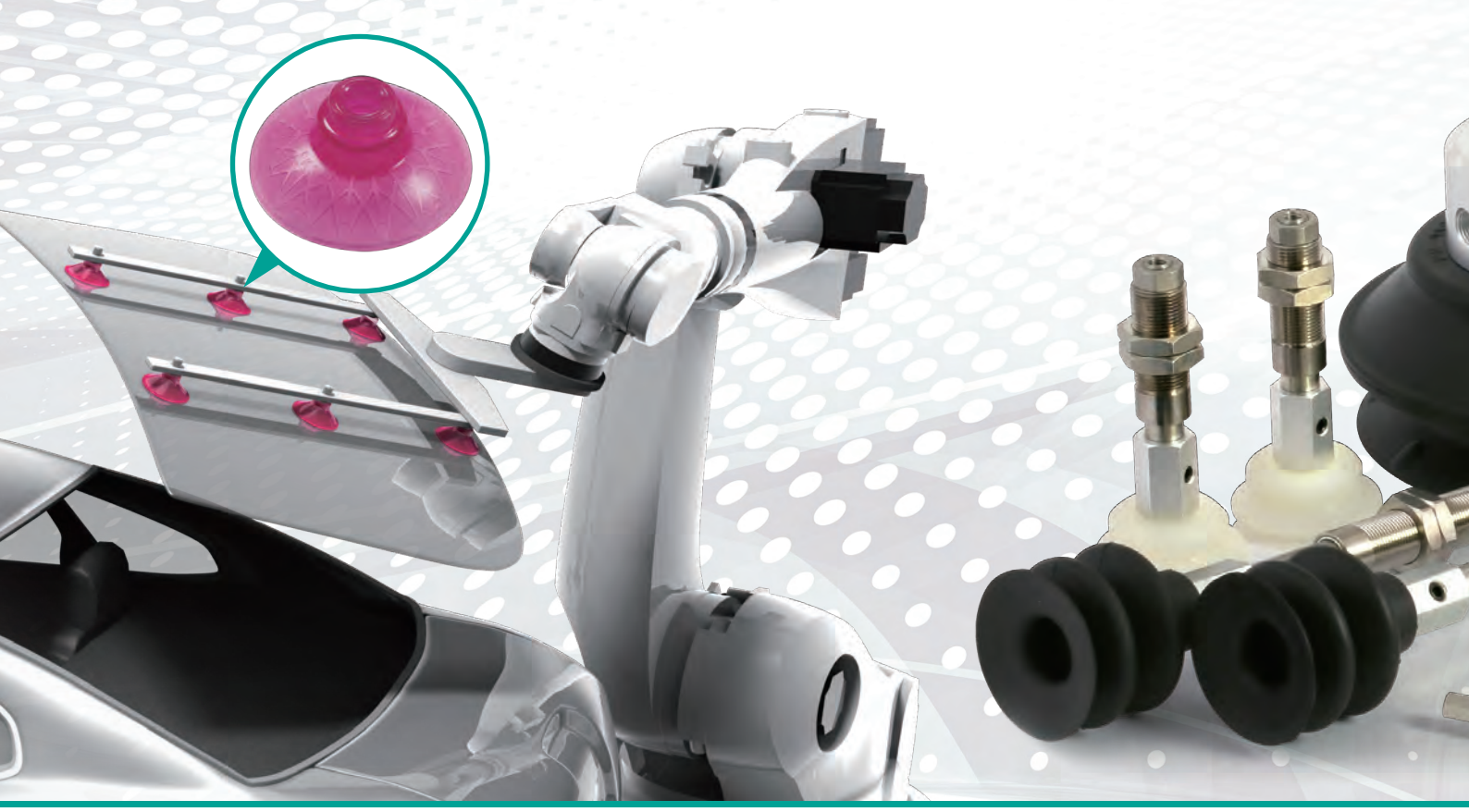

Apply our wide variety of cups and development

	PA Series	Cup with Thin Lip	For workpieces with smooth and pliable surfaces like paper or vinyl sheets	P.177
	PB Series	2 Bellows Cup	For workpieces with the oblique surface	P.201
	PC Series	3 Bellows Cup	For workpieces with the oblique surface or spherical surface	P.225
	PCD Series	Ring Cup	For workpieces that are ring-shaped such as CD and DVD discs	P.251
	PD Series	Foam Cup	For uneven workpieces with surfaces such as those of block tiles	P.259
	PF Series	Flat Cup	For workpieces with smooth and even surfaces	P.277
	PFO Series	Flat Cup with oil grooves	For workpieces with smooth and even surfaces. Also, for workpieces which has an oil film in the surface	P.309
	PH Series	Deep Cup	For workpieces whose surface have the projection, and suction while surrounding the projection	P.323
	PJ Series	2 Bellows Cup	For workpieces with the oblique surface or spherical surface	P.335
	CORE Series	Mark Free Core for PJ series cup	Besides being mark free it also prevents deformation of thin workpieces and adhesion	P.363
	PK2 Series	High Durability Cup/ Flat type	For automobile steel sheets etc.	P.367
	PK2B Series	High Durability Cup/ 2 Bellows type	For automobile steel sheets etc.	P.373

02 Suction Cup

capabilities to suction your all work piece

	PK2L Series	High Durability Cup/ Oval type	For automobile steel sheets etc.	P.381
	PL Series	Multiple Bellows Cup	For uneven or soft work pieces	P.389
	PN Series	Cup with Thin Lip	For workpieces with smooth and pliable surfaces like paper or vinyl sheets	P.395
	PN-B Series	Cup for Pouch Film/ 2bellows type	For workpieces with smooth and pliable such as pouch film vinyl sheets	P.427
	PP Series	Cube Cup	For small workpieces such as semiconductor chips	P.435
	PQ Series	Non-rotation Cup	For workpieces with smooth and pliable surfaces, and works that resist rotation of cups	P.441
	PR Series	Cup for Round Bar	For workpieces with cylindrical shape	P.447
	PU Series	Swivel Cup	For workpieces whose surfaces are not horizontal	P.459
	PW Series	Oval Cup	Where suction space is limited and when hoist force is desired	P.483
	RA Series	Mark Free Cup	For workpieces that are sensitive to marks, such as semiconductor chips and glass products	P.497
	SM Series	Metal Detectable Suction Cup	For detecting the cup fragments by the metal detectors	P.499
	TN Series	Setting Screw	Setting screws for variety cups	P.503

03 Other Equipments for Vacuum

Excellent usability and maintenance performance

Vacuum Filter
VF Series
P.523

Vacuum In-line Filter
VFL Series
P.527

Miniature Vacuum In-line Filter
VFL-M5 Series
P.531

Workpieces Drop Prevention Check Valve
FPV Series
P.533

Silencer for CONVUM
MS Series
P.539

Vacuum Check Valve
CH-01 Series
P.541

04 Pressure Sensor

Easy to see, easy to understand, compact

Dual Display 3 Colors
Digital Pressure Sensor
MPS-35 Series P.549

Digital Display Pressure Sensor
with Solenoid Valve Control
MPS-10 Series P.567

Digital Display
Pressure Sensor
MPS-23 Series P.555

Digital Display Pressure Sensor
with Solenoid Valve Control
MVS-201 Series P.573

Slim Type Digital Display
Pressure Sensor
MPS-9 Series P.561

Electronic Pressure Sensor
MVS-030AB Series P.579

05 Non-contact Transfer Equipments

Make it possible to realize non-contact conveying with Myotoku air technology

Non-contact Cup
COP Series
P.585

Slim Type
Non-contact Cup
COPS Series
P.591

06 Switching Valve

Control The vacuum circuit flexibly

Vacuum Switching
Valve Unit
MPV3 Series
P.599

07 Other Pneumatic Equipments

The expert at supporting the system

Miniature Cylinder
with Push-in Connector

MKY Series

P.613

Miniature Cylinder
with Barb Connector

TKY

P.615

How to Use This Catalog

Make sure to read next page「Safety instructions」.

Recommend! ..... Model satisfy general usage function with product advantages. Please use it for your reference.

RoHS ..... Certified with RoHS directive regulations.

Selection Guide ••→ P.### ..... Explaining how to select convum, suction type, shape for your workpiece.

How to Order

Our products have wide variation with size, materials, functions and options.
Please ask us with customized type number which is assigned respective item.

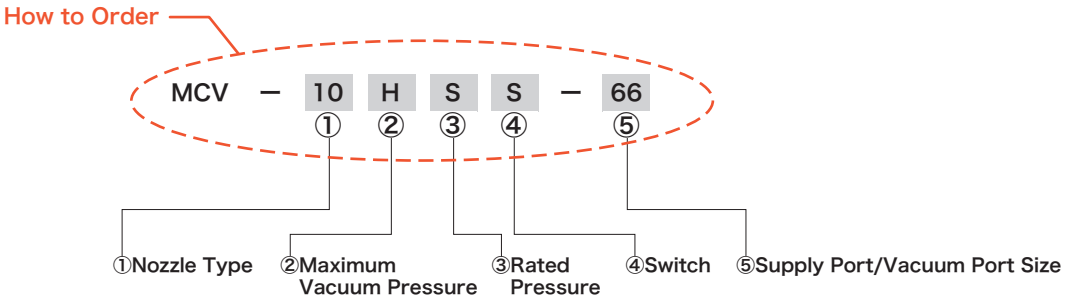

Dimensions

Note that shown drawing is neither actual size or same scales in this catalogue even if the drawings shown in the same page!

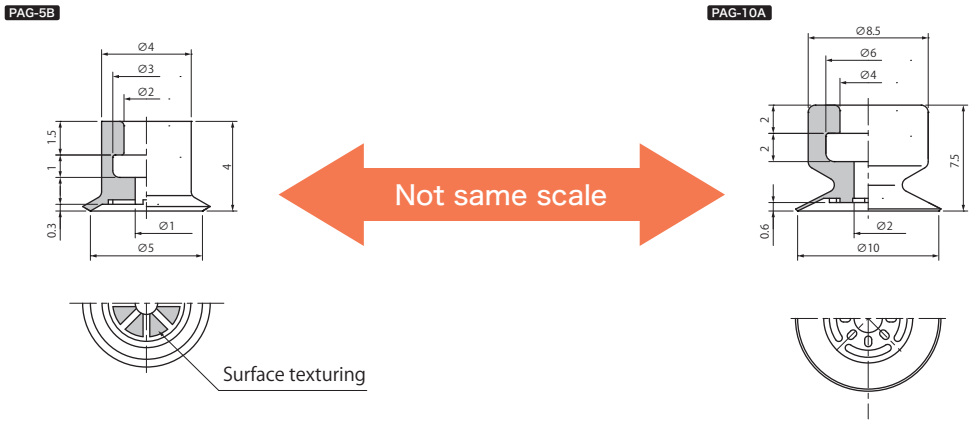

Safety instructions

Make sure to read these cautions before use.
Make sure to also read and understand the "Safety instructions for each series of products".

These safety instructions are intended to prevent hazardous situations and equipment damage. These instructions indicate the level of potential hazard with the labels of 【DANGER】【WARNING】【CAUTION】. They are all important notes for safety and must be followed.

DANGER DANGER symbol is use only when the wrong by handling operation may cause serious human injury or even death and at the same time when your immediate attention to the warning is required.

WARNING WARNING symbol is used when the wrong by handling operation may cause serious human injury or even death.

CAUTION CAUTION symbol is used when the wrong by handling operation may cause slight personal injury or property damage.

Please also refer to JIS B8370※1 and ISO 4414※2. Please respect Labor Safety and Sanitation Law, High Pressure Gas Safety Law and other safety rules.
※1 JIS B8370:Pneumatic fluid power - General rules relating to systems.
※2 ISO 4414:Pneumatic fluid power-Recommendations for the application of equipment to transmission and control systems
Please also note that notes are also written in some cases and may contain very important information regarding product options or use. Please read it careful.

WARNING

● Vacuum and pneumatic equipment shall be selected properly.

The compatibility of the vacuum and pneumatic equipment is the responsibility of the person who designs the equipment or decides its specifications.
Since the products specified here is used under various operating conditions, its compatibility with specific equipment must be decided by the person who designs the equipment or decides its specifications based on necessary analysis and test results.
The expected performance and safety assurance of the equipment will be the responsibility of the person who has determined its compatibility with the product.
This person should also continuously review all specifications of the product referring to its latest catalog information, with a view to giving due consideration to any possibility of equipment failure when configuring the equipment.

● Only personnel with appropriate training should operate machinery and equipment

Inappropriate usage or handling may cause injury, equipment damages or indirect damage. Vacuum and pneumatic equipment is designed as industry usage. The assembly, operation and maintenance of machined or equipment including our products must be performed by an operator who is appropriately trained and experienced.

● Do not operate or reinstall the equipment or machine without a security check before.

・When inspecting or adjusting the equipment, make sure to take measures against the dropping or uncontrolled movements of the actuators.
・Before reinstallation, make sure to switch off power and compressed air supply.
・Before restart, make sure that no parts can break off.

● Use this pneumatic equipment only in accordance with the specifications. Contact CONVUM when using it outside the range of specifications.

・Environments outsides specification, like using in outdoor applications.
・nuclear energy, railways, airplanes, railway cars, ships, medical equipments, food or beverage processing equipment, pharmaceutical equipments, emergency, cutout and similar devices with security issues.
・All machinery which in case of wrong handling or operating might pose hazardous effects on human life or property.

Common precautions ①

Make sure to read these precautions before use.
Make sure to also read and understand the "Safety Instructions"for each series of products.

Design

WARNING

- **Take safety-design measures against accidents that may occur due to decreased vacuum pressure caused by power outages and troubles related to the vacuum sources.**

  If the vacuum pressure is lowered and the suction force of the suction cups is lost, workpieces that are conveyed may drop and cause damage to mechanical equipment and personal injuries. Therefore, make sure to provide safety structures against dropping.

- **Long-time continuous electric connection**

  If you need to use the electromagnetic valve turned on continuously for a long time, please contact us for advice.
  When electric power is continuously connected to the electromagnetic valve for long time, packings and gaskets may be damaged due to heat from the solenoid.

- **When installing the suction cups, do not tighten them too hard.**

CAUTION

- **Be aware of the fact that the diameter of the suction cup will increase by 10% during suction.**

- **When connecting if two or more suction cups to one CONVUM, the workpiece is released from one suction cup, the workpiese will also be released from the other suction cup(s).**

  If a workpiece is released from one suction cup, the vacuum pressure will be lowered, causing the workpieces of the other suction cup(s) to be released.

- **When vacuum is generated, do not operate the electromagnetic valve for vacuum break control. The vacuum will be broken and cause trouble.**

- **Current leakage**

  When using C-R elements in the contact point protection circuit (surge voltage protection), current will leak through the C-R element. If this current leakage becomes big, it will cause malfunction.Therefore, please keep the leakage under 1 mA.

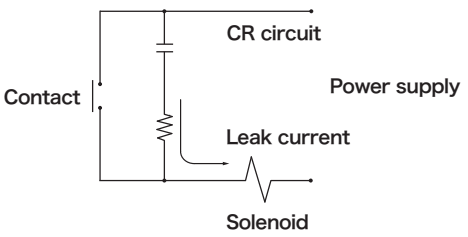

Selection

WARNING

- **Please read and understand the specifications thoroughly.**

  The vacuum equipment introduced in this catalogue has been designed for use with vacuum only, and cannot be used for other purposes.
  Please do not use outside of the specified pressure and temperature ranges, as this will cause damage and malfunction.

- **Please select equipment with suitable flow.**

  Please refer to the selection documentation (CONVUM : P.023, suction cups : P.163) to select CONVUM and suction cups that are suitable for handing the workpiece.

- **When using suction cups to move objects, please also take the degree of acceleration into consideration.**

  When gripping and moving a workpiece with vacuum suction cups, and the mass and area of the workpiece and the degree of acceleration are large, the force of the wind pressure and acceleration may cause release of the workpiece. Please take this into consideration when making your selection.

- **Make sure that the Center of gravity of the workpiece is positioned exactly under the center of the suction cups.**

  If the position of the center of the suction cup and the center of gravity of the workpiece is incorrect when moving, the turning force will be added to the workpiece and cause it to be released from the suction cup.

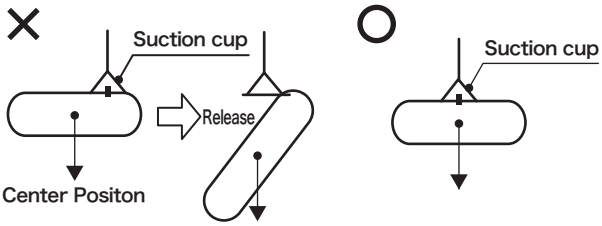

- **When there is no distance between the center of gravity of the workpiece and the suction surface, and the workpiece is heavy, it is necessary to install some kind of mechanism against rolling in the horizontal and to lower the speed of movement.**

  When the center of gravity of the workpiece exactly under the center of the suction cup, and when the workpiece is heavy, rolling occurs in the horizontal direction during movement, and this may cause the wor workpiece to be released from the suction cup.

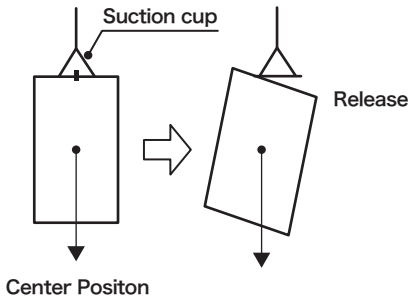

Operating environment

DANGER

- **Do not use in potentially explosive atmospheres.**

WARNING

- **Do not use with corrosive gas, chemical ingredients, water or steam.**
- **Do not use in direct sunlight. Otherwise use a protection cover.**
- **If there is a heat source nearby, protect the device against the heat.**
- **When using a valve with a control panel, make sure that the valve is vented.**
- **Protect the valve with a cover when welding spatter can reach the device.**

  Spatter can burn the valve's plastic surface which might cause fire.
- **When drops of water get in contact with the valve, this might lead to short-circuit or coil-burnout.**

  Use a cover or apply other protective measures.

CAUTION

- **Usage below minimum temperature range**

  When pneumatic devices are used below 5℃, install an air dryer or tale other protective measures to prevent the drain within the compressed air from condensing or freezing.
- **Impact and vibration**

  Apply impacts at 150m/s² or lower and vibration at 40m/s² or lower to the pneumatic devices.
  If these ranges are exceeded this might lead to malfunction.
- **Keep the devices' lead wires as far as possible away from high-voltage devices, high-voltage wires and power lines.**

  The noise might otherwise lead to malfunction.
- **Ion generated circumstance**

  Under ion generated circumstance, deterioration of rubber accelerated. Please consult to us for material that hard to deteriorate.

Air Quality

WARNING

- **Use clean air**

  If the compressed air contains corrosive gas, chemical or saline ingredients, etc., this might cause malfunction or damage.

CAUTION

- **Attach an air filter**

  Use a filter with filtration rate 5μm or below.
- **Install an air dryer**

  When using air with a large part of drain, this might cause malfunction. Using an air dryer lowers the air temperature and reduces drain.
- **Take measures against sludge**

  When compressor oil degrades(sludge) and gets into the pneumatic device, this might cause malfunction. Please use oil which does not emit sludge or install a coalescing filter to prevent sludge getting into the pneumatic devices.

- **Please use non-lubricated air.**

  If use lubricated air, it may lead to lower vacuum pressure due to oil deposits to nozzle and diffuser.
- **If sharing the air line with other equipment, please separate piping for CONVUM and prevent from entering oil to CONVUM.**

Common precautions ②

Make sure to read these precautions before use.
Make sure to also read and understand the "Safety Instructions"for each series of products.

Attachment

WARNING

- **Make sure to install so that there is no looseness in the connection.**

  If the vacuum equipment is not tightened properly, it may come off.

- **Do not start until you have checked that the equipment operated properly.**

  After having made the installation, connect compressed air and electricity, carry put functional and leak tests, check that everything is properly installed, safe and everything works properly, and then start the system.

- **When painting**

  When painting the resin section, depending on the paint and solvents, the resin may be negatively affected.
  Therefore, please contact us in regard to the propriety of the paint.
  Please do not erase, remove or paint over the nameplates or lettering on the vacuum equipment.

- **Make sure that there is space so that maintenance can be carried out.**

- **Pressure (including vacuum pressure) holding**

  Solenoid valve (including vacuum switching) accepts a little amount leakage. Long time use with pressure holding may cause trouble.

CAUTION

- **Do not use any organic solvents to wipe nameplates or model indications.**

  Wiping with organic solvents may erase the indications.

- **Don not use any organic solvents to wipe the resin parts.**

  Wiping with organic solvents may deteriorate resin parts.

- **When tightening the various types of screws, please observe the tightening torques below.**

Screw size	Tightening torque (N・m)
M1.7	0.05
M2	0.07
M2.5	0.16
M3	0.59
M4	1.37

Wiring

CAUTION

- **Do not use spiral piping**

  If using spiral piping for the vacuum lines, it may result in a delay in reaching the maximum vacuum level due to resistance in the piping and also to a lower flow level.
  This may lead to lower vacuum pressure for suction and malfunction of the vacuum sensor.

- **When using manifolds for vacuum units, please pay attention to the diameter of the piping.**

  If there are many manifolds in a series, they may cause insufficient flow. Therefore, make sure to have both supply and exhaust at both ends of the manifolds.When using a common exhaust, the vacuum level may be lowered significantly due to pipe resistance. Therefore, please use piping of a larger diameter.

- **Procedures before carrying out piping**

  Before carrying out piping, make sure flush the pipes and to remove chips and cutting oil as well as other contaminants from the pipe interior.

- **How to wind sealing tape**

  When winding sealing tape on the screws, please leave 1.5-2 threads open.

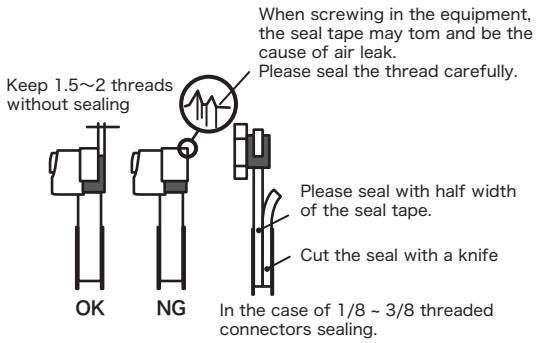

- **How to apply liquid sealing material**

  When applying liquid sealing material to the screws, apply a proper amount to one third of the screws, and then tighten the screws. Be careful not to apply too much, If too much is used, it may enter the device and cause leakage of the sealing, etc. If using zinc chromate in the couplings, it will take a long time to harden, so please be careful.

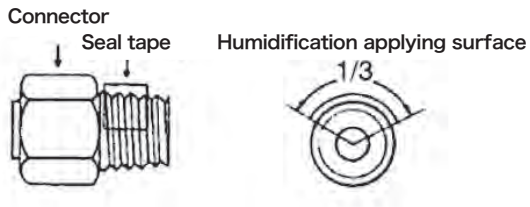

Wiring

WARNING

- **Switch off compressed air and power supply when piping**

When not switch off during piping, bodily harm or property damage by electric shock or randomly moving actuators might occur.

- **Do not connect electrical cables wrongly**

Please check that the cables are connected to the correct electrical poles.
For this refer to the cable colors and symbols.
If you connect the cables wrongly the following might occur:

< Valves without surge killer diode >

In case the wires are not connected to the correct poles, the control switch, internal diode and other electrical components might burn.

< Valves with surge killer diode >

In case the wires are not connected to the correct poles, the valve does not switch.

- **Do not overstretch or twist the lead wire**

As this might disconnect the wire, leave enough clearance.

- **Check the cable isolation**

If the isolation of the lead wire, extension cable, etc. is insufficient, this might lead to damage of the control switch due to overload.

- **Apply the right voltage**

If the wrong voltage is applied to a valve, this might lead to malfunction or coil-burn-out.

- **After wiring check the connections before you connect to the power line.**

Piping

CAUTION

- **The sealing for the M5, M3 couplings is double-sided and therefore no sealing tape or sealing liquid is required.**

- **Do not carry out the piping incorrectly.**

When carrying out piping of the various devices, please refer to the catalogue and the nameplates attached to the products, and make sure not to mix up the compressed-air supply port and the port on the vacuum side.

- **Tightening of screws of piping and couplings.**

When tightening the pipes and screws, please make sure that no chips or sealing material enters the pipes or couplings.
Also make sure to tighten with a torque that is within the specified range.

Port size	Tightening torque (N・m)
M3	0.3 ~ 0.5
M5	1.5 ~ 2.0
R, Rc1/8	7.0 ~ 9.0
R, Rc1/4	12 ~ 14
R, Rc3/8	22 ~ 24
R, Rc1/2	28 ~ 30

- **When tightening couplings to the vacuum units, please use a wrench for the aluminum body part.**

If a wrench is used on the resin parts, it may cause leakage or damage.

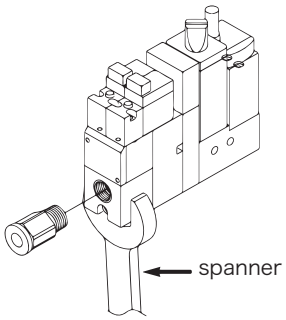

- **Bending of piping**

When bending the piping, do not bend at an angle that is too steep. If bending too steeply, the pipe resistance will be higher, and a boundary will be created on the positive pressure side and the pressure will be lowered, causing the exhaust on the negative pressure side to become slower.

Common precautions ③

Make sure to read these precautions before use.
Make sure to also read and understand the "Safety Instructions"for each series of products.

Piping

CAUTION

• When using push-in connectors

When positive pressure is applied in tube, the tubes expand, and therefore connectors should be sealed or clamped. In the case of vacuum pressure, the tubes contract due to the atmospheric pressure. Due to this, the sealing may deteriorate and cause a lower vacuum pressure. It may also cause troubles such as the tubes coming off.
When using other tubes than those made of polyurethane, polyamide(nylon, soft nylon),please make sure that contraction does not occur.

< Example of troubles in piping >

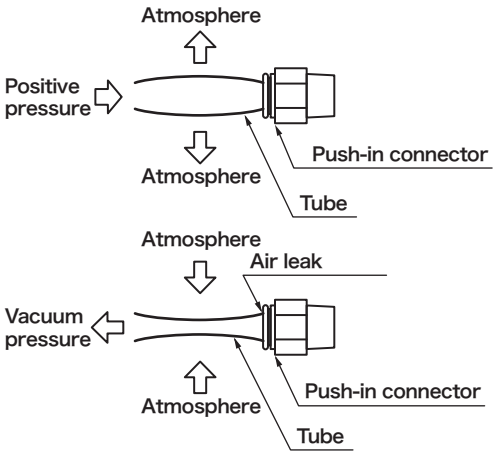

Control

CAUTION

• When breaking the vacuum, do not apply vacuum break control while a workpiece (the object gripped) is held by the suction cup.

When using a CONVUM with a filter or when there is a filter in the piping, excessive stress is applied to the filter, which might cause damage.

• In case of air-operation specifications

Please make sure that pilot air is let out through the exhaust port of the electromagnetic valve after vacuum has been generated or after breaking the vacuum. If using closed center (blocking of all ports) of the 3-position double solenoids, exhaust is not possible and the operation cannot be stopped.

Maintenance

WARNING

• Check before maintenance

After checking that no load can fall down, cut the power and compressed air supply and release the pressure from the devices.

• Check after maintenance

Before restart, check all electrical and pneumatic connections foe leak.

• Manual valve operation

Beware that connected devices are moving, when operating the valve manually.
If there is a locking button for manual operation, unlock it.
Otherwise when the valve is switched on connected devices might work improperly thus posing danger to its environment.

• Disassemble vacuum equipment

Please read manual well, then disassemble vacuum equipment properly.

• Disassembling and reassembling of pneumatic devices should only be done by specialists who have sufficient knowledge.

• Do not lose any parts during dis-and reassembly.

Functionality can not be guaranteed as air leaks and malfunction might be the result.

WARNING

• Discharging of drain

To maintain the air quality, regularly discharge the drain of the air filter is necessary.

• Filter and silencer needs inspection, cleaning and periodical elements exchange.

Clogging may lead to lower vacuum pressure.

Warranty and Disclaimer

1. Warranty

① For any failure or damage reported within the warranty period which is clearly our responsibility, a replacement product or necessary parts will be provided, or repair by our service center free of charge.

② The warranty period of the product is 1 year in service or 1.5 years after the product is delivered, whichever is first.
Also, the product may have specified durability, running distance, please consult our customer support center.

③ The suction cup is a consumable part so it is warranted for a year period after it is delivered. Provided that the deterioration and wearing of rubber material caused by usage is not covered by the warranty even if it's within the warranty period.

2. Disclaimer

① The warranty does not cover these cases below :

- Using without the range of specifications defined on the catalog or the specification documents.
- The reason of failure is not caused by our products.
- Any failure or damage by modification or repair which is not supported by us.
- Any failure caused by the reason which could not be foreseen with the technical knowledge at the time of delivery.
- Any failure or damage by any disaster, accident, act by third party, intentional or negligent act by customer and any other force majeure.

② This warranty applies only to our product independently, and not to any other damage incurred due to the failure of the product.

CONVUM

VACUUM EJECTOR SYSTEM

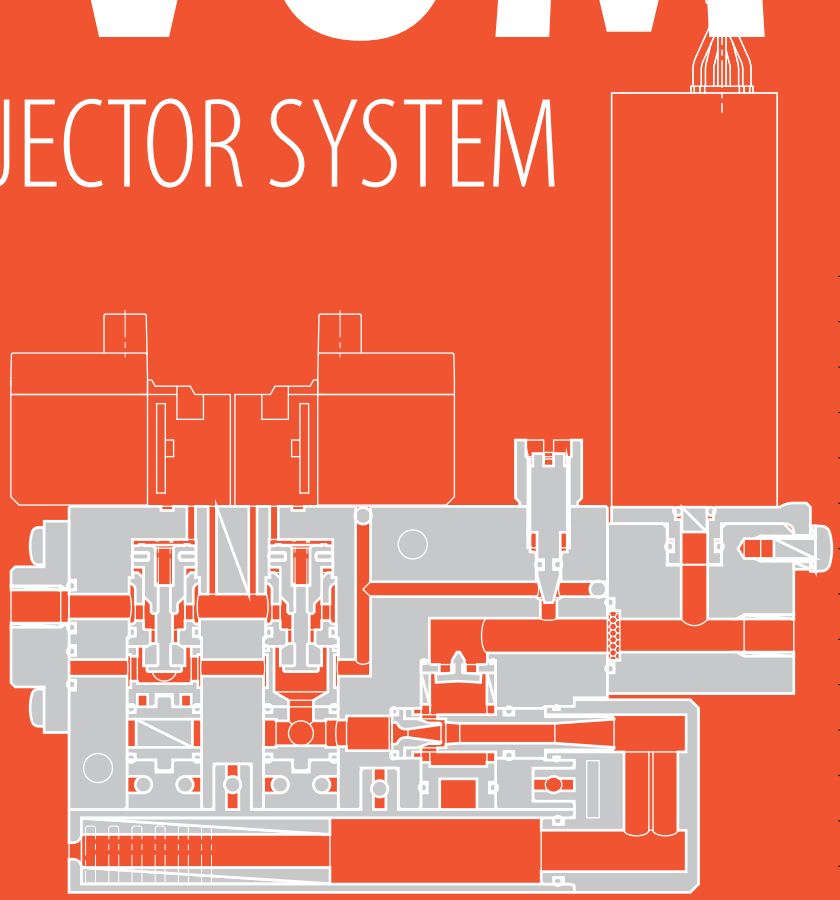

CONVUM Technical Documentation / Selection Guide P.021

CONVUM Common Precautions P.031

CONVUM Basic performance P.033

Compact Energy-saving CONVUM SC1series P.035

High Speed CONVUM SC2 series P.047

Medium Size Smart CONVUM SC3 series P.057

20mm Width CONVUM MC22 series P.073

High Vacuum Flow CONVUM MC72 series P.085

Miniature CONVUM CCV series P.099

Standard Resin CONVUM MCV series P.101

Standard CONVUM CV series P.107

Modular Type CONVUM CVA2 series P.117

Energy-saving Mechanical CONVUM EC1 series P.129

Push-in Connector CONVUM MCA series P.135

High Vacuum Level CONVUM HDV series P.143

High Vacuum Suction CONVUM HFV series P.147

Big Vacuum Flow CONVUM CVZ series P.151

01

CONVUM Technical Documentation

What is vacuum?

What is vacuum?

"Vacuum" or "Negative pressure" is a pressure that is lower than the atmospheric pressure. When evacuating air form a container, the internal pressure of the container becomes lower than the surrounding atmospheric pressure, and "vacuum"is thus created.

Atmospheric pressure

As atmospheric pressure is the mass of air above the ground,it becomes lower at high altitudes and higher at low altitudes.When mentioning atmospheric pressure in general terms, one refers to the atmospheric pressure at sea level. The atmospheric pressure is also low when there is climatic low pressure and high when there is climatic high pressure. Therefore, even if the suction volume is identical, it may happen that the vacuum level does not rise.
The standard state of air used in theoretical calculations is called standard reference air, which has a temperature of 20℃, a relative humidity of 65% and an atmospheric pressure of 0.1 MPa.(JIS B8393)

Vacuum force

The force of vacuum, i.e., the gripping force of vacuum, is the difference in pressure between the atmospheric pressure and the vacuum pressure, and the force with which the atmospheric pressure pushes on the area on the vacuum (area receiving the pressure,gripping area).
Consequently, even when the vacuum gripping force is at maximum, it cannot be higher than the atmospheric pressure. Also, when the atmospheric pressure fluctuates, the gripping force will also fluctuate.

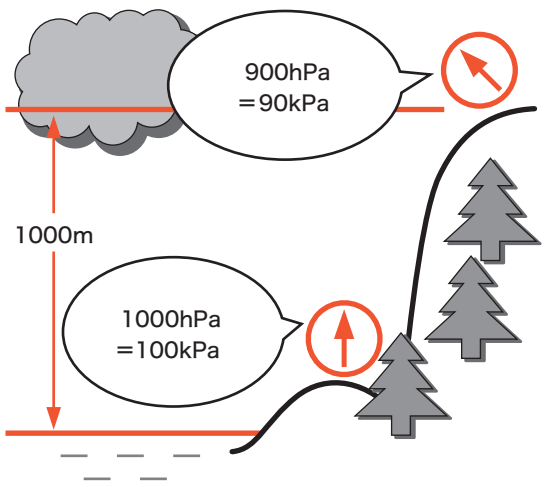

Pressure changes depending on altitude

Absolute pressure and gauge pressure

There are two kind of pressure : "Absolute pressure" and "Gauge pressure".
Absolute pressure is the pressure that is expressed with complete vacuum (zero point) as a basis, and gauge pressure is the pressure that is expressed with the atmospheric pressure (absolute pressure 101 kPa) as a basis. When differentiating between these two, 100kPaabs is used to express absolute pressure and 100kPaG to express gauge pressure. The pressure normally used is the gauge pressure, and therefore, the expressions used in this catalog refer to gauge pressure. Consequently, as the vacuum pressure is lower than the atmospheric pressure it is expressed as -80kPa(minus).

Absolute pressure and gauge pressure

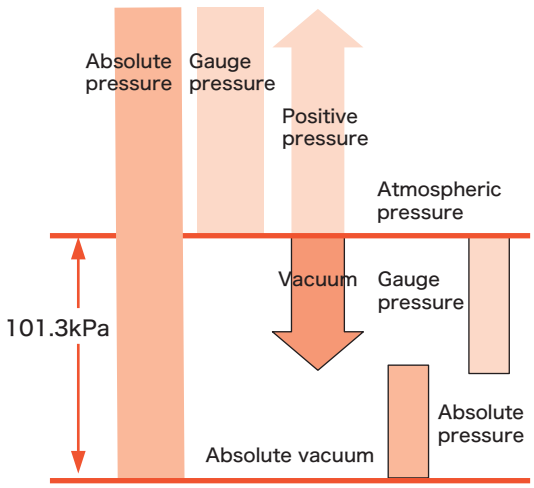

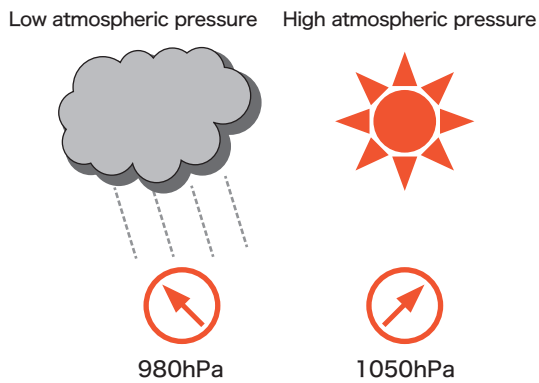

Pressure changes depending on weather

CONVUM (Vacuum ejector) principle

CONVUM is an equipment using compressed air to generate vacuum.
Compressed air is ejected by the nozzle, that's why it is called ejector. Other terms such as ejector pump or vacuum generators also designate this equipment.

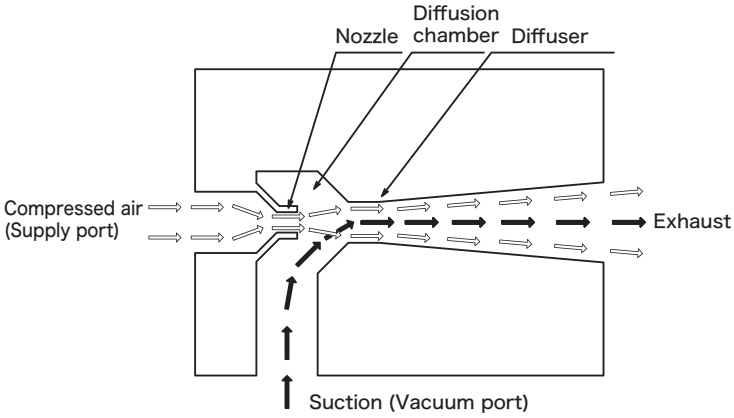

CONVUM vacuum generation principle

① Compressed air is supplied to supply port and pass through the nozzle.

② Compressed air flows into the diffusion chamber at high speed and is ejected in the diffuser.

③ Due to the high speed air flow, it creates a pressure drop (Bernoulli's principle) and air flows from the suction port (vacuum generation).

④ Both compressed air from vacuum port are mixed and exhausted through the diffuser.

As described in the upper picture, there is no moving part in simple constructed ejector. The benefit is along life circle.

Units

Pressure

1MPa=1000kPa

1Pa=1N/m²

Flow

Our catalog use ANR (Atmosphere Normal de Reference) standard L/min(ANR).

Conversion table of units

(Gray indicates conventional unit)

kPa	MPa	bar	kgf/cm²	mmHg
1	$1X10^{-3}$	$1X10^{-2}$	$1.019 X10^{-2}$	7.501
$1X10^{3}$	1	1X10	$1.019 X10^{-2}$	$7.501 X10^{3}$
$1X10^{2}$	$1X10^{-1}$	1	1.019	$7.501 X10^{2}$
$9.807 X10$	$9.807 X10^{-2}$	$9.807 X10^{-1}$	1	$7.355 X10^{2}$
$1.333 X10^{-1}$	$1.333 X10^{-4}$	$1.333 X10^{-3}$	$1.359 X10^{-3}$	1

Force

N	kgf
1	$1.019X10^{-1}$
9.807	1

Pipe screws

Screw type	Number of the thread	Effective diam. (mm)
R, Rc1/8	28	9.147
R, Rc1/4	19	12.301
R, Rc3/8		15.806
R, Rc1/2	14	19.793
R, Rc3/4		25.279
R, Rc1	11	31.770

Note) Threads number per 25.4mm.

Screw table

Screw type\Standard	JIS	Old JIS	British standard	US standard
Tapper male	R	PT	BSPT	NPT
Tapper female	Rc			
Parallel female	Rp	PS	-	-
Parallel male	G	PF	BSPP	NPTF
Parallel female	G			

Note) ISO standard are similar to British standards, but different with US standards.

CONVUM Selection Guide

1.Study of workpiece

Please check below points about the workpiece.

① Characteristic
Surface condition, porosity, conductivity, shape morphing,(paper, vinyl, etc.).

② Shape
Suction surface, flatness (angles checking), shape (long, spherical, oval).

③ Workpiece weight

④ Lifting direction
Horizontal/Vertical

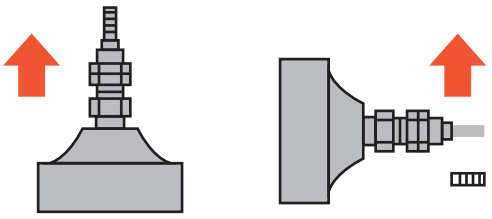

Horizontal lifting　　Vertical lifting

2.Selection of suction cup

1) Vacuum pressure setting

We select the vacuum generation source specifications with a safety margin.
In the case of CONVUM vacuum ejectors -66.6kPa of vacuum level is the minimum value. However, in case of porosity of the workpiece, the vacuum level does not increase enough. A lifting test will be necessary in some cases. Please consult with us.

2) Suction cup diameter selection

In the case of round cup, we use the following formula.

$$D=2\sqrt{\frac{M\times 9.8\times S\times 1000}{\pi\times n\times P}}$$

D : Cup diameter (mm)
M : Workpiece weight (kg)
S : Safety factor　　Horizontal : S=4
　　Vertical : S=8
n : Cup quantity
P : Vacuum pressure (-kPa)

Note) In this example we set the lifting force needed at 9.8N.

We select the cup diameter (D) based on catalog selection requirements.
In the required value is higher than the recommended value, use at least 2 suction cups to make the calculation.
In the case the cup shape is not round, please consult with us.

Calculation of cup diamete diameter → P.165

Calculation example of cup diameter

Horizontal lifting

Round cup calculation

Workpiece weight : M=0.5kg
Vacuum pressure : P=-70kPa
Cup quantity : n=1piece
Safety factor when horizontal lifting : S=4

$$D=2\sqrt{\frac{M\times 9.8\times S\times 1000}{\pi\times n\times P}}$$

$$D=2\sqrt{\frac{0.5\times 9.8\times 4\times 1000}{\pi\times 1\times 70}}$$

$$=18.8\,(mm)$$

The suitable suction cup diameter will be ϕ20.

The real suction surface decreases as the cup diameter is shrinking when generating vacuum. The change depends on the cup material, shape, rubber hardness. Please never forget the safety factor when selecting the suction cups.

3) Suction surface

We calculate the suction surface with cup diameter information.

$$A = \frac{\pi \times D^2}{4 \times 100}$$

A : Suction surface (cm²)
D : Suction cup diameter (mm)

4) Effective suction surface

The cup diameter values do not show the reality. When there is a vacuum generation, the vacuum cup shrinks and its shape may increase. This is what we call the effective suction surface. At that time we call the cup diameter: the effective cup diameter.
The elongation of the effective cup diameter depends on several factors such as the rubber thickness, vacuum pressure rate, friction coefficient etc. but in general it increases about 10%.

5) Theoretical suction force

a. In the case of horizontal lifting

The vacuum pressure is calculated from the suction force.

$$F = 0.1 \times A \times P$$

F : Theoretical suction force (N)
A : Cup suction effective surface (cm²)
P : Vacuum pressure (-kPa)

b. In the case of vertical lifting

The lifting force depends on the suction force of the vacuum pressure and the frictional force of the suction cup against the workpiece.

$$F = \mu \times 0.1 \times A \times P$$

F : Theoretical suction force (N)
μ : Friction coefficient
A : Suction surface (cm²)
P : Vacuum pressure (-kPa)

The frictional force may be very different depending on characteristics of workpiece and cup material. We recommend to measure in real condition of operation.

List of theoretical suction force → P.166

6) Cup rubber material

The cup rubber material is selected depending on the conditions of use, the fluid type, and environment of use. please refer to below tables and contact us for more details.

Please consult us for other materials such as mark-free rubber, high heat resistance (300℃) silicone rubber, antibacterial silicone, non-adhesive rubber, Hydrogenated nitrile rubber (HNBR), Ethylene-propylene (EPDM).

Applications list for major suction cup materials → P.167

7) Shape of the cup

We select the cup shape based on the shape of the workpiece.
Consult us for suction test with a workpiece.

Cup shape	Workpiece
Flat shape	General workpiece Flat workpiece with low flexibility
Deep shape	Spherical workpiece
Bellows shape	In case that buffer function is needed In case that suction of workpiece is diagonal

We also manufacture suction cup in accordance with specific shape.

Shrinkage Allowance of Cup → P.169
Physical Property Data → P.167
Selection of Fitting → P.165

CONVUM Selection Guide

CONVUM (ejector) selection

1) Selection of nozzle diameter

① Suction (air) flow
We select the needed air flow from the characteristic table.

② Time to reach the max. vacuum pressure
We select the nozzle size from the characteristic table. However, depending on tube thickness and length, the time to reach the maximum vacuum pressure may be longer. Please select the nozzle with a margin.

③ Cup diameter
For non-porous workpiece, in case of no air leak and suction with one suction cup, please refer to below table as indication.

Cup diameter	Nozzle size
ϕ 80 or less	ϕ 0.5
ϕ 150 or less	ϕ 1.0
ϕ 200 or less	ϕ 1.5

If there is air leak when suction, please select a nozzle with at least one size up.

④ Suction cup quantity
If you use several cups with one ejector, please select a nozzle size with at least one size up.

2) Selection of vacuum type

We select the vacuum type.

① For heavy work: High vacuum level H type.
For workpiece such as metal sheet, the suction (air) flow is low but the maximum vacuum pressure is high.

② For porous workpiece: High flow L type.
For workpiece such as carton box, the maximum vacuum pressure is low but the suction (air) flow is high.

3) Selection of compressed air supply type

We select a stable compressed air supply source based on rated pressure characteristics. Please set the supply pressure needed when CONVUM is operating.

Rated pressure (MPa)	Compressed air supply type
0.5	S
0.35	R

4) Air passage

If solenoid valve is mounted, we select the air passage type.

① Normally close type
When solenoid valve in ON, vacuum is generated.

② Normally open type
When solenoid valve is OFF, vacuum is generated.

5) Options

In case of unit type, the following options are available. Please check the available options for each series

① Pressure sensor
② Blow-off function
③ Vacuum filter
④ Silencer
⑤ Others

Calculation of air leak from a test

We measure an air leak by connecting a vacuum sensor to a vacuum circuit with an ejector and suction cup.

Test circuit

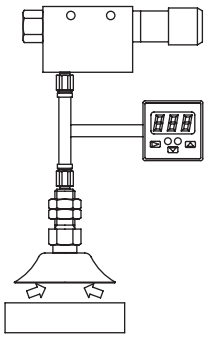

When vacuum is generated with CV-20HS, the vacuum sensor shows -50kPa.
How to calculate the air leak volume?

We calculate the air leak from the exhaust pressure characteristics.

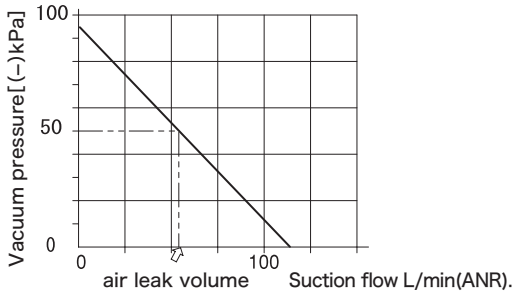

At -50kPa, the air leak is equal to 45 L/min(ANR).

Calculation of time to reach the max. vacuum pressure

1) When using CONVUM

In case of using CONVUM with suction cup: after the solenoid valve for CONVUM turns ON, the time to reach the maximum vacuum pressure inside the vacuum cup is calculated as follows.

$T=(V/C)^{1/\alpha}$

T : Time to reach max. vacuum pressure (s)

V : Volume of piping from the suction cup to the CONVUM (L)

C : Constant value of maximum vacuum pressure (Refer to table 1 of P.030)

α : Factor of CONVUM (Refer to table 1 of P.030)

Note) The following calculation is based on an experiment. This is only an indication.

Table of CONVUM C,α → P.030

Calculation example

We used s suction cup of ϕ10mm connected with a polyurethane tube of ϕ4mm diameter and 1m length to a CONVUM. We calculated the time to reach the maximum vacuum pressure when -80kPa of vacuum pressure is reached.

1) Calculation of the piping volume

$$V=\frac{\pi\times d^2\times L}{4\times 1000}$$

V : Piping volume (L)
d : Piping inner diameter (cm)
L : Tube length (cm)

$$V=\frac{\pi\times 0.4^2\times 100}{4\times 1000}$$

= 0.012(L)

2) Calculation of the time to reach the maximum vacuum pressure

CONVUM is H type and nozzle is ϕ0.5mm, vacuum pressure is -80kPa.
C=0.05, α=1.02

Time to reach the maximum vacuum pressure

$T=(V/C)^{1/\alpha}$
$=(0.012/0.05)^{1/1.02}$
$=0.23$ (s)

2) In the case of using a vacuum pump

When using a vacuum pump: after the vacuum switching valve turns ON, the time to reach the maximum vacuum pressure inside the suction cup is calculated as follows.

$T=2.3\times\alpha\times(V/Q)\times 60\times \mathrm{Log}(101/(101-P))$
$=2.53\times(V/Q)\times 60\times \mathrm{Log}(101/(101-P))$

T : Time to reach max. vacuum pressure (s)

V : Volume of piping from the suction cup to the vacuum switching valve (L)

Q : Vacuum flow of the vacuum switching valve or vacuum pump (L/min)

$$V=\frac{\pi\times d^2\times L}{4\times 1000}$$

V : Piping volume (L)
d : Piping inner diameter (cm)
L : Tube length (cm)
P : Maximum vacuum pressure (-kPa)
α : Coefficient (≒1.1)

Note) This calculation is only for your information.

Calculation example

We used a suction cup of ϕ10mm connected with a polyurethane tube of ϕ4mm diameter and 1m length to a vacuum switching valveMPV3. We calculated the time to reach the maximum vacuum pressure when -80kPa of vacuum pressure is reached.

1) Calculation of the piping volume

$$V=\frac{\pi\times d^2\times L}{4\times 1000}$$

V : Piping volume (L)
d : Piping inner diameter (cm)
L : Tube length (cm)

$$V=\frac{\pi\times 0.4^2\times 100}{4\times 1000}$$

= 0.012(L)

2) Time to reach the maximum vacuum pressure

Based on the catalog
Suction flow : Q=50 (L/min)
Maximum vacuum pressure : -80 (kPa)

Time to reach the maximum vacuum pressure

$T=2.53\times(V/Q)\times 60\times \mathrm{Log}(101/(101-P))$
$=2.53\times(0.012/50)\times 60\times \mathrm{Log}(101/(101-80))$
$=0.024$ (s)

CONVUM Selection Guide

5.Selection of the cup fitting

1) Fitting type

We select the fitting from the below types.

① Fixed fitting type
This is the standard type.

② Spring fitting
This fitting has a spring integrated and is suitable to prevent workpiece damages. The stroke allows an additional operation margin when the bellows type cup is not sufficient.

③ Non-rotation spring fitting
This fitting has a spring integrated with non-rotation construction. It maintains the position of the workpiece when handling. Swivel type, guide type fitting is also available.

2) Port position

We select the port position type from below types.

① Top port connection
The port is located on the top of the fitting.

② Side port connection
The port is located on the side of the fitting.

3) Connectors

We select the type of connector. In the case of M3, M5 port size, push-in connector or barb connector option is available.

6.Piping

5) Piping circuit to the suction cup

The vacuum pressure characteristics can be easily affected by the piping resistance compared with a high positive pressure. Especially, the pipe inner diameter and length can highly affect the time to reach maximum vacuum pressure. Please select the tube with the smallest required inner diameter size and the shortest length.

2) Compressed air supply to CONVUM

Please select the tube with enough inner diameter size to cover the air consumption of the CONVUM.
Here is a reference table.

CONVUM nozzle (mm)	Nylon tube (O.D×I.D)	Urethane tube (O.D×I.D)
ϕ 0.5	ϕ 6 × 4	ϕ 6 × 4
ϕ 0.7		
ϕ 0.9		
ϕ 1.0		
ϕ 1.5	ϕ 8 × 6	ϕ 8 × 5
ϕ 2.0		ϕ 10 × 6.5
ϕ 2.5	ϕ 10 × 7.5	ϕ 12× 8
ϕ 3.0		

7.Solenoid valve for CONVUM

Please select a solenoid with a sufficient effective area. The selection indicate is at least 3 times the size of the CONVUM nozzle diameter.
Here is a reference table.

CONVUM nozzle (mm)	Recommended solenoid valve effective area (mm^2)
ϕ 0.5~1.0	More than 3
ϕ 1.3~1.5	More than 7
ϕ 2.0	More than12
ϕ 2.5	More than18
ϕ 3.0	More than 25

8.Compressor

We select a compressor that has enough capacity to supply stable compressed air volume based on the CONVUM air consumption. The CONVUM air consumption and compressor power is 80L/min(ANR) for reciprocating type compressor which means a power of 735W.Following the calculation below, we may select a compressor with enough power to use a CONVUM.

W=735×R/100× (Q/80)
W : Compressor equivalent power (W)
R : CONVUM operation time (%)
R=T/60×100
T : Handling time per minute (s)
Q : CONVUM air consumption (L/min (ANR))

Calculation example

We use a manifold type of MC22-10HS type with 5 unites mounted. Supply pressure is set at 0.5MPa. The manifold CONVUM is operating 10 seconds and non-operating 20 seconds.
Based on these conditions, the compressor is selected as follows:

CONVUM operating rate

R =20/60×100
=33.3 (%)

Air consumption (from catalog characteristics) for 1 unit.

Q =44 (L/min)
As we used a manifold of 5 units the total air consumption is
Q =44×5×5
=1100 (L/min (ANR))

Compressor power

W=735×R/100× (Q/80)
=735× (33.3/100) × (1100/80)
=3365 (W)
=3.3 (kW)

Please select a compressor with capacity about 3.3kW

CONVUM Selection Guide

Flow characteristics of the equipment

1.Calculation of flow based upon the effective sectional area

The calculation formulas differ depending on the air pressure applied to the pneumatic equipment.
The pressure ratio of the equipment's upstream side and downstream side should be decided and the formula selected.

$$\frac{P_2+0.1}{P_1+0.1} \leq 0.5 \quad \text{In the case of choke flow}$$

$$Q=120S(P_1+0.1)\sqrt{\frac{293}{273+t}} \quad \cdots\cdots\cdots \ (1)$$

$$\frac{P_2+0.1}{P_1+0.1} > 0.5 \quad \text{In the case of subsonic flow}$$

$$Q=240S\sqrt{(P_2+0.1)(P_1-P_2)}\sqrt{\frac{293}{273+t}} \quad \cdots \ (2)$$

S : Effective sectional area [mm²]
P_1 : Gauge pressure on the equipment's upstream side[MPa]
P_2 : Gauge pressure on the equipment's downstream side[MPa]
t : Temperature of the supplied air[℃]

2. Calculation of flow based on conductance at the speed of sound and critical pressure ratio

The formula used to obtain the flow (Q) of the equipment is:

$$\frac{P_2+0.1}{P_1+0.1} \leq b \quad \text{In the case of choke flow}$$

$$Q=600\times C(P_1+0.1)\sqrt{\frac{293}{273+t}} \quad \cdots\cdots\cdots \ (3)$$

$$\frac{P_2+0.1}{P_1+0.1} \geq b \quad \text{In the case of subsonic flow}$$

$$Q=600\times C(P_1+0.1)\sqrt{1-\left[\frac{\frac{P_2+0.1}{P_1+0.1}-b}{1-b}\right]^2}\sqrt{\frac{293}{273+t}}$$

$$\cdots\cdots\cdots \ (4)$$

C : Conductance at the speed of sound[dm³/(S・bar)]
b : Critical pressure ratio [no units]

Calculation example

A Supply an air pressure of 0.3 MPa to an electromagnetic valve with an effective sectional area of 4 mm² and release the downstream side into the atmosphere. Obtain the flow when the valve is opened. (The temperature of the supplied air should be 20℃).
The pressure ratio on the upstream side and the downstream side of the electromagnetic valve is:

$$\frac{0+0.1}{0.3+0.1} = 0.25$$

When the pressure ratio is smaller than 0.5, the flow path is choked and the condition is substituted be formula (1)

$$120\times4(0.3+0.1)\sqrt{\frac{293}{273+20}} = 192[dm^3/\text{min}]$$

B Supply an air pressure of 0.5MPa to the electromagnetic valve when the conductance speed of the sound is 2.0 and the critical pressure ratio is 0.3.
Obtain the flow at 0.2 MPa in the piping on the downstream side. (The temperature of the supplied air should be 20℃.)
The pressure ratio on the upstream side and the downstream side of the electromagnetic valve is:

$$\frac{0.2+0.1}{0.5+0.1} = 0.5$$

As the critical pressure ratio is not reached, it is a subsonic flow.Substitute with formula(4).

$$600\times20(0.5+0.1)\sqrt{1-\left[\frac{\frac{0.2+0.1}{0.5+0.1}-0.3}{1-0.2}\right]^2}\sqrt{\frac{293}{273+20}}$$

$$=600\times1.2\times\sqrt{\frac{5}{16}}\times\sqrt{1}$$

$$=402.5[dm^3/\text{min}]$$

Table1　CONCUM C (constant value of maximum vacuum pressure) , α (factor of CONVUM)

H (High vacuum type)

Vacuum type	Rated pressure type	Nozzle type	C						α
			Vacuum pressure (kPa)						
			-40	-50	-60	-70	-80	-90	
H	S	ϕ 0.5	0.19	0.12	0.08	0.07	0.05	0.03	1.02
		ϕ 0.7	0.42	0.25	0.15	0.12	0.09	0.06	
		ϕ 1.0	0.83	0.50	0.33	0.26	0.20	0.12	1.09
	R		0.82	0.46	0.26	0.20	0.13	0.08	1.06
	S	ϕ 1.3	1.50	0.92	0.53	0.41	0.28	0.18	1.03
		ϕ 1.5	1.85	1.17	0.76	0.60	0.45	0.25	1.00
	R		1.75	1.10	0.65	0.55	0.39	0.24	1.06
	S	ϕ 2.0	3.80	2.30	1.45	1.10	0.86	0.62	1.09
	R		2.85	1.75	1.00	0.80	0.58	0.37	1.17
	S	ϕ 2.5	6.10	3.51	2.11	1.61	1.14	0.69	1.00
		ϕ 3.0	10.3	5.70	3.15	2.45	1.60	0.97	

L (High flow type)

Vacuum type	Rated pressure type	Nozzle type	C			α
			Vacuum pressure (kPa)			
			-40	-50	-60	
L	S	ϕ 0.5	0.26	0.18	0.11	1.06
		ϕ 0.7	0.71	0.50	0.31	1.02
		ϕ 1.0	0.90	0.60	0.25	1.09
		ϕ 1.3	1.60	1.00	0.50	
		ϕ 1.5	2.30	1.60	0.74	
		ϕ 2.0	3.60	2.40	1.00	
		ϕ 2.5	6.80	4.72	3.27	1.00
		ϕ 3.0	10.0	7.40	4.88	

Q (High volume type)

Vacuum type	Rated pressure type	Nozzle type	C	α
			Vacuum pressure (kPa)	
			-40	
Q	S	ϕ 1.0	1.30	1.00
		ϕ 1.5	4.00	
	R	ϕ 1.0	1.00	
		ϕ 1.5	3.20	

CONVUM Common Precautions

Make sure to read these precautions before use. Make sure to also read and understand the "Safety Instructions"for each series of products.

Piping

CAUTION

- CONVUM is vacuum ejector. Please set the supply pressure with the expectation of pressure drop.
- Depending on pipe materials and valve type, even if the connection port diameter is big, the inner diameter of the orifice may be narrow. Please check this carefully.

Compressed air supply port (P port)

- Please supply compressed air with 0.35~0.6MPa.
- In the case of manifold type with 5 or more units, please supply compressed air to both supply ports.
- Please use tube according to CONVUM air consumption characteristics.
- Please separate the supply pressure to actuators and vacuum ejectors. Supply compressed air as close as possible to the compressed air supply source.
- In the case that several ejector units of a manifold operate simultaneously, as the pipe diameter is narrow, the supply pressure may drop suddenly sometimes. In this case please use tube with larger diameter. Also, use push-in connector with smaller width than CONVUM body width.

Suction cup connection port (V port)

- When the pipe is too narrow, the vacuum pressure inside the ejector become high and the vacuum sensor may keep turning ON. Please select a pipe based use conditions. (Do not select extreme narrow pipe)
  Use also push-in connector with smaller width lower than CONVUM body。
- Pipe thickness
  Please use a tube at vacuum pressure side and at vacuum pad side with the same size, thick enough to prevent pressure dropping when CONVUM is operating. If you need to divide the tube at suction cup side, use a thicker tube at vacuum pressure side and thinner tube at pad side.

CONVUM maximum vacuum pressure characteristics

- H type (pressure type): when the supply pressure is high, the vacuum pressure become higher (the absolute pressure is low). Once the vacuum pressure reached maximum volume, constant increasing of compressed air will not increase vacuum pressure, which only increase air consumption. Be careful not to make unnecessary energy loss.

Solenoid internal circuit

CAUTION

• In case of DC24, 12V

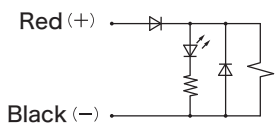

Please connect the solenoid valve with respect of polarity (+) (-). Except DC24, 12V, there is no protection for reverse connection. Please make the connection properly.

• Caution of self-holding solenoid valve

- Minimum 30ms of conduction time is needed to operate self-holding solenoid valve.
- Continuously electricity apply is not necessary when you use the self-holding solenoid valve because parts inside the solenoid will stay in set or reset position after instantaneous electric conduction (over 30ms).
- Please avoid continuously electricity apply.
- Malfunction is likely to occur when the temperature of coil rises under certain working conditions. If continuous electric conduction is necessary, please ensure the conduction time is under 5 minutes, and make sure the non-conduction time (both set and reset is off) is longer than that before subsequent use(duty ratio under 50%).
- Please do not use a circuit that set and reset signal may be energized at the same time.

• Wiring diagram

- CONVUM side/blow-off side

  Wiring of signal type solenoid valve

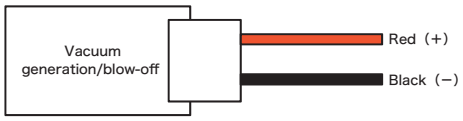

• Wiring diagram

- CONVUM side

  Wiring of self-holding solenoid valve

Rated voltage :DC24V(±10%)

⚠ CAUTION

About chattering of CONVUM

- Vacuum pressure of CONVUM is raised up proportionally with pressure rise of compressed air supply, and reaches maximum vacuum pressure, then sinking gradually.

As specification of CONVUM, chattering would occur around maximum vacuum pressure.
If chattering occurs, noise and instable fluctuation of vacuum would be generated.

Therefore, for the CONVUM with rated pressure 0.5Mpa, we design the CONVUM to have the apex vacuum pressure around 0.45~0.48Mpa. This CONVUM works in optimum condition with compressed air supply at 0.5MPa. If chattering occurs, please adjust supply air pressure to avoid chattering.

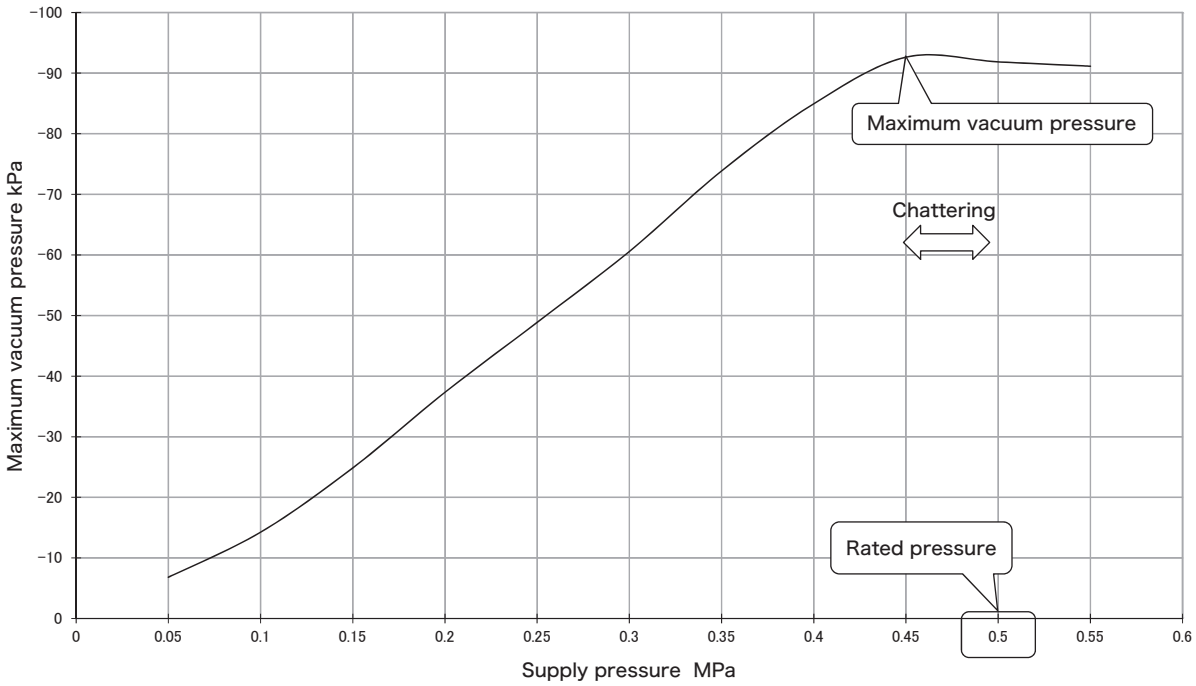

CONVUM Basic Performance

Series/Model Name			SC1	SC2	SC3	MC22	MC72	CCV
			Compact Energy-saving	High Speed	Medium Size Smart	20mm Width	High Vacuum Flow	Miniature
Nozzle	Single	0.4		●				●
		0.5	●	●		●		
		0.7	●			●		
		1.0	●		●	●		
		1.3			●			
		1.5			●		●	
		2.0					●	
		2.5					●	
		3.0						
		4.35						
	Multi-stage	X	●					
		0.5						
		0.7			●			
		1.0			●			
		1.3						
		1.5			●			
Valve	Vacuum generation		●	●	●	●	●	
	Blow-off		●	●	●	●	●	
Pressure sensor	Digital output		●	●	●	●	●	
	Analog output		●	●	●	●	●	
	Mechanical							
Vacuum generation valve type	Normally opened				●	●	●	
	Normally closed		●	●	●	●	●	
	Self-holding		●	●	●	●	●	
Filter			●	●	●	●	●	
Check valve			●		●	●	●	
Silencer			●	●	●	●	●	
The number of manifold			6	8	5	8	5	
Page			P.035	P.047	P.057	P.073	P.085	P.099

	MCV	CV	CVA2	EC1	MCA	HDV	HFV	CVZ
	Standard Resin	Standard	Modular Type	Energy-saving Mechanical	Push-in Connector	High Vacuum Level	High Vacuum Suction	Big Vacuum Flow
		●	●		●			
					●			
	●	●	●		●			
	●			●	●			
	●	●	●					
		●				●		
		●					●	
		●					●	
							●	
				●				
				●				
				●				
								●
			●					
			●					●
	●	●	●					
			●					
			●					
	●	●	●	●		●		●
	P.101	P.107	P.117	P.129	P.135	P.143	P.147	P.151

SC1 Series

Compact Energy-saving CONVUM

RoHS

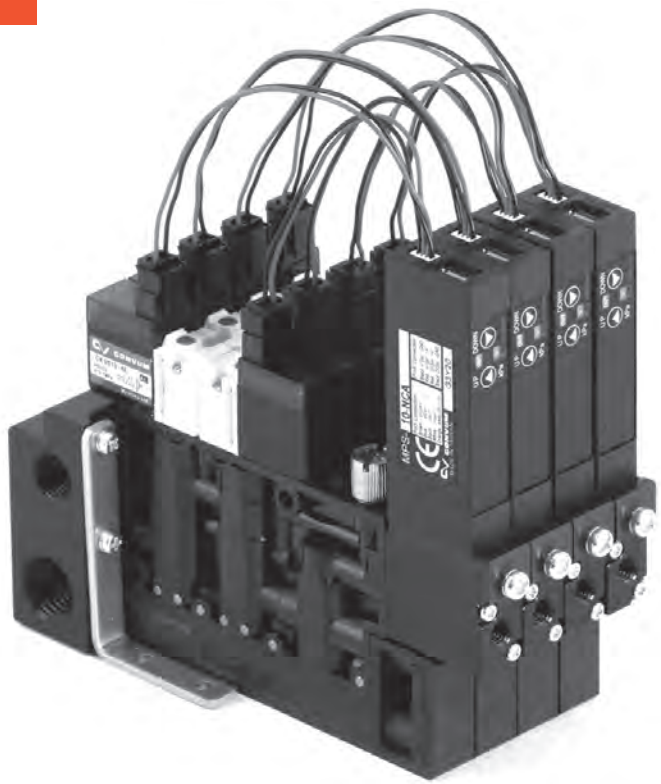

All-in-One Unit

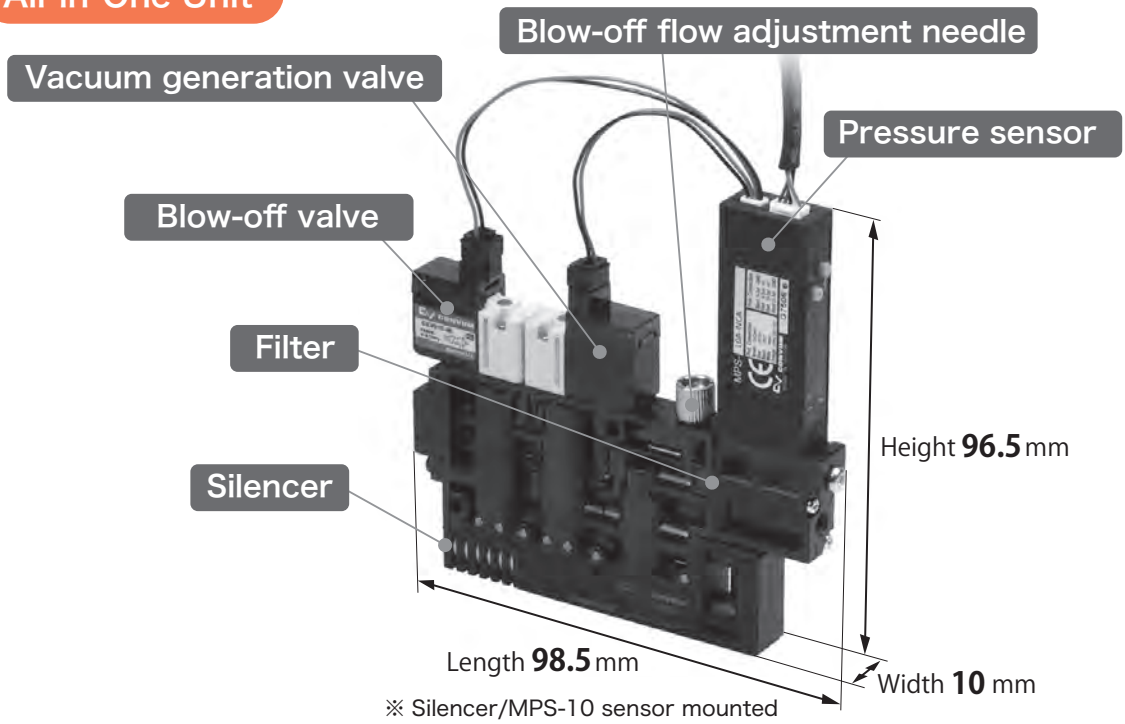

※ Silencer/MPS-10 sensor mounted

Compact/Light weight

- Weight 87g (Single unit, without sensor)
- 10mm width body
- Resin body

※ The photograph is with MPS-10

Air consumption reduced

- Air consumption is only 10L/min(ANR) by special X nozzle.
  50% reduced ※Compared with MC22 series
- When using the energy-saving pressure sensor

Air consumption **can be reduced up to 60%!**
(※ According to our measurement condition)

Electricity rate **can be saved by 28,224 yen per year!**
(※ The work piece without air permeability)

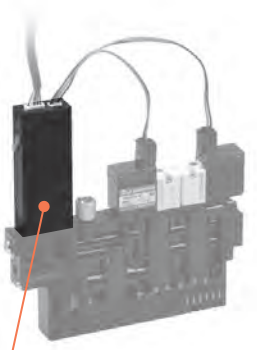

Energy-saving MPS-10
(With solenoid valve control function)

Detail of the sensor ••→ P.567

Comparison of calculation example of annual electricity rate
(mounted with energy-saving sensor MPS-10)

Condition

The number of CONVUM : 20 pcs
Running time : 20 days/month
8 hours/day
50% of the running time is vacuum adsorption time

20×8×0.5=80 hours
=4,800 minutes

Electricity rate is calculated by the compressor
1m³=1.4 yen 1kWh=16yen

MC22-07HS type

Air consumption : 4,800min×22.5L×20 pcs=2,160,000L=2,160m³
Electricity rate : 2,160m³×1.4 yen×12 months= **36,288** yen

SC1X type

Air consumption : 4,800min×10L×20 pcs=960,000L=960m³
Electricity rate : 960m³×1.4 yen×12 months=16,128 yen

In addition, the consumption reduction rate is 50% when using the MPS-10 pressure sensor.
Electricity rate : 16,128 yen×0.5=**8,064** yen

Low noise

Owing to the improvement of silencer structure

Reduced noise level significantly
(Up to 12% reduced)

Reduced **8.7**dB(A)
on average

Nozzle type	Closed the vacuum port			Opened the vacuum port		
	New type	Old type	Reduction value	New type	Old type	Reduction value
X	**52.6**	61.2	8.6	**61.9**	70.2	8.3
5S	**62.2**	70.4	8.2	**66.5**	75.2	8.7
7S	**69.7**	78.5	8.8	**72.8**	81.4	8.6
1S	**74.6**	83.4	8.8	**75.9**	84.6	8.7
5R	**59.3**	68.3	9.0	**65.0**	73.8	8.8
7R	**68.5**	78.0	9.5	**72.0**	80.7	8.7
1R	**75.1**	84.5	9.4	**77.2**	85.9	8.7

※Background noise: 40dB(A), measurement distance: 1m時 unit:dB(A)

In addition to silencer exhaust, concentrated exhaust can be selected

Exhaust the air to outdoor together → **Can be used in the clean room, etc.**

SC1 Compact Energy-saving CONVUM

How to Order

In case of manifold

SC1	M	X	V9	C	S	S	3	1	2	L
	①	②	③	④	⑤	⑥	⑦	⑧	⑨	⑩

① Body Type

S	Single unit

M	Manifold unit

② Nozzle Type

Symbol	Nozzle size [mm]	Rated pressure [MPa]	Maximum vacuum pressure [kPa]	Suction flow [L/min(ANR)]	Air consumption [L/min(ANR)]
X	-	0.5	-90	8.5	
5S	0.5	0.5	-87	5.5	
7S	0.7			11	22.5
1S	1.0			20	50
5R	0.5	0.35		4	10
7R	0.7			9	22.5
1R	1.0			15	55

⑤ Vacuum Generation Valve Type

S	Normally closed
W	Self-holding Note1

Note1) The energy-saving function for the sensor doesn't work if the self-holding valve is selected.

⑥ Exhaust Type

S	Silencer exhaust	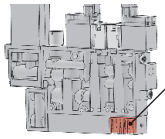 Silencer
C	concentrated exhaust Note1.2	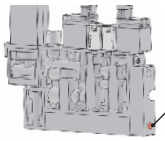 Exhaust port

Note1)Please select check valve (select C in ④) when concentrated exhaust is selected for manifold type. And then it can prevent the air from warp rounding to the vacuum port.

Note2)Concentrated exhaust cannot be selected when 1S or 1R nozzle is selected for single unit.

image of manifold selection

Number of ⑦= Number of ⑧ + Number of ⑨

SC1M##505 Manifold base: 5 stations, CONVUM: 5 Units

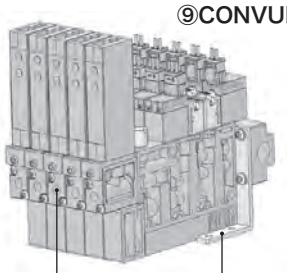

SC1M##523L Manifold base: 5 stations, CONVUM: 3 units, block plate: 2 pieces

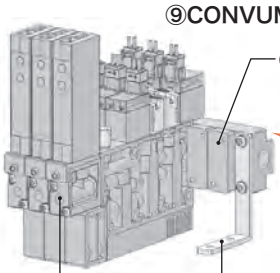

This kind of selection is also available for future system expansion.

Turn the vacuum port towards your side, placed the CONVUM to the left. (L type for ⑩)

③ Pressure Sensor

Symbol	Sensor type	Pressure range [kPa]	Display	Switch output	Analog output	Input specifications
V8	MPS-V81	-100～0	N/A	N/A	DC1～5 V	N/A
V9	MPS-V9	-101.3～0	Digital	NPN1output	DC1～5 V	N/A
10	MPS-10[Note1,2]	-101～500	Digital	NPN1output	DC1～5 V	Sink
ZZ	Without sensor					

Note1)Energy-saving pressure sensor (solenoid valve control function mode)
Note2)Please select check valve (select C in ④) in case of using energy-saving function.
※Please consult with us for PNP output type.

④ Check Valve

Symbol	Check valve
C	With
N	N/A

⑦ Manifold Base

Symbol	No. of stations	Symbol	No. of stations
1	1station	4	4 stations
2	2 stations	5	5 stations
3	3 stations	6	6 stations

⑧ No. of Block Plates

Symbol	No. of block plates	Symbol	No. of block plates
0	N/A	3	3 pieces
1	1 piece	4	4 pieces
2	2 pieces	5	5 pieces

⑨ No. of CONVUM

Symbol	No. of CONVUM	Symbol	No. of CONVUM
1	1 unit	4	4 units
2	2 units	5	5 units
3	3 units	6	6 units

⑩ Position of CONVUM

Blank	Figure of ⑦ and ⑨ are same
R	Placed to the right
L	Placed to the left

※Please turn the vacuum port towards your side, the CONVUM you faced cloud be either left or right upon chosen.

Recommend

These model number below satisfy general needs and functions with product advantages. ※Please feel free to contact us.

Product code	Model number	Specifications				
		Nozzle size (mm)	Pressure sensor		Check valve	Vacuum generation valve type
203900074	SC1S5SV9CSS	0.5	Digital	With	Silencer	Normally closed
203900035	SC1S1SV9CSS	1.0	Digital	With	Silencer	Normally closed
203900079	SC1S5S10CSS	0.5	Digital, energy-saving	With	Silencer	Normally closed
203900011	SC1S1S10CSS	1.0	Digital, energy-saving	With	Silencer	Normally closed

Maintenance Parts

Single Unit

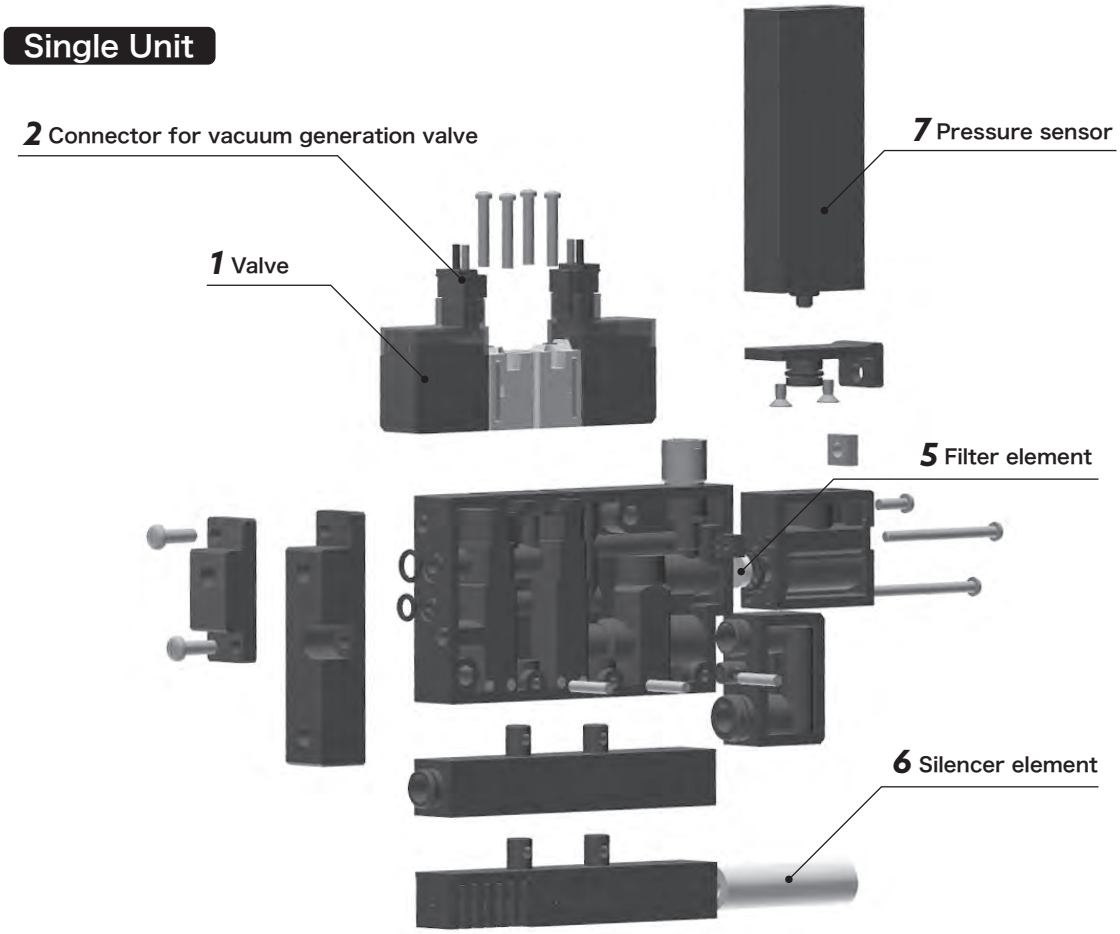

Manifold Unit

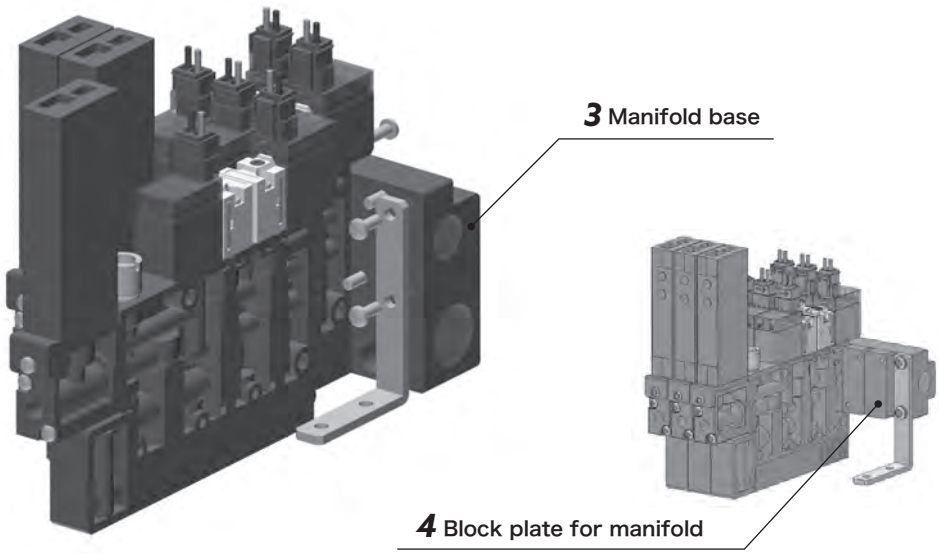

1 Valve

CKV010-4E
Common for vacuum generation and blow-off

※ Lead wire length 300mm
※ Gasket and mounting screw are included

LV290-4E
Self-holding type

※ Lead wire length 300mm
※ Gasket and mounting screw are included

2 Connector for Vacuum Generation Valve
※With lead wire

CA 2 — V4 — 6

Applicable valve

2	CKV010-4E
3	LV290-4E

Lead wire length (mm)

Blank	300
6	600
10	1000
20	2000 Note1
30	3000 Note2

Note1, 2) CKV010-4E only.

3 Manifold Base

SC1 — MB 1

Exhaust type

MB	Individual exhaust
ME	Concentrated exhaust

No. of stations

1	1 station	4	4 stations
2	2 stations	5	5 stations
3	3 stations	6	6 stations

4 Block Plate for Manifold

SC1 — BP B

B	Individual exhaust
E	Concentrated exhaust

※For preventing air leak when reducing the body number of the manifold.

5 Filter Element

SC1 — E (5 pcs in1 set)

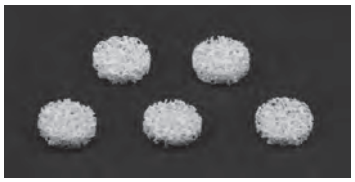

6 Silencer Element ※Single unit only

SC1 — SF

7 Pressure Sensor
※O-ring and mounting screw are included

Model number	Specifications
MPS-V81-SC1	No display, analog output
MPS-V9-SC1	Digital display
MPS-10-SC-B	Energy-saving, digital display (normally closed, sink input)
MPS-10-SC-W	Wire-saving, digital display (self-holding, sink input)

8 Connector Cable for MPS-10 Sensor and Valve

MPS — 10 — VC — SC1 — W

Blank	Normally closed
W	Self-holding

9 Vacuum Port Plate for Single Unit

SC1 — M5

※This parts required when changing from with sensor type unit to without sensor type unit.

Construction

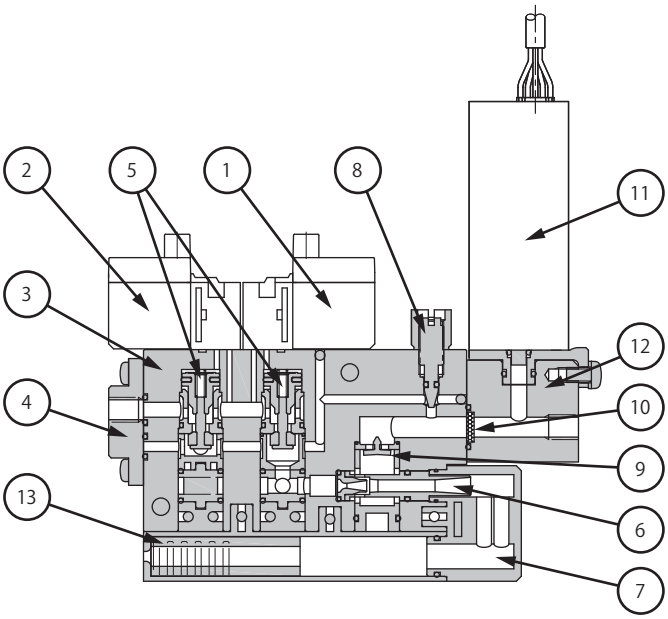

Component Parts

No.	Parts name	Material
1	Vacuum generation valve	-
2	Blow-off valve	-
3	Body	PA
4	Air supply base	Aluminum
5	Poppet valve	Aluminum, SUS, FKM, NBR
6	Nozzle kit	Aluminum, NBR
7	Silencer	PA
8	Blow-off flow adjustment needle	SUS, NBR
9	Check valve	PA, FKM
10	Filter element	PVF
11	Pressure sensor	-
12	Sensor base	PA
13	Silencer element	PVF

Symbol

Normally Closed

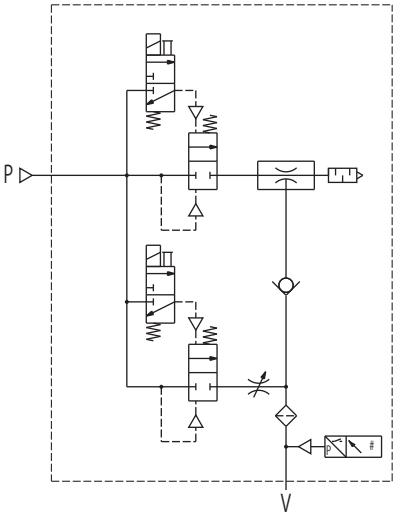

Self-holding

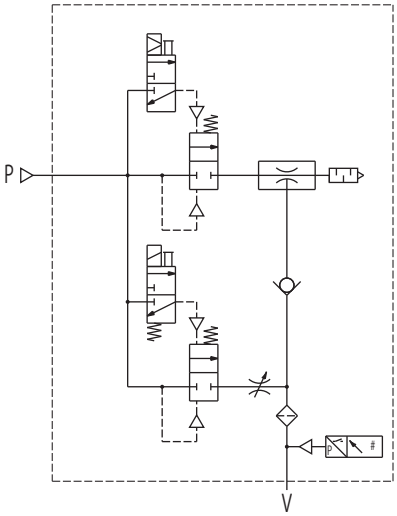

CONVUM Specifications

Description ＼ Model number	Unit	X	5S	7S	1S	5R	7R	1R
Nozzle size	mm	-	0.5	0.7	1.0	0.5	0.7	1.0
Fluid		Non-lubricated compressed air						
Ambient temperature	℃	0～55(No Freezing)						
Operating pressure range	MPa	0.1～0.55						
Vacuum generation valve type		Normally closed(S)/self-holding(W)						
Filter element filtration	μm	350						
Filter Filtration area	mm^2	13.8						
Rated pressure	MPa	0.5	0.5			0.35		
Maximum vacuum pressure	kPa	-90	-87					
Suction flow	L/min(ANR)	8.5	5.5	11	20	4	9	15
Blow-off flow (supply pressure・MPa)	L/min(ANR)	40 (0.5)	40(0.5)			30(0.35)		
Air consumption	L/min(ANR)	10		22.5	50	10	22.5	55

Weight (g)

Specifications			Weight
Single unit	Vacuum generation valve type	Sensor	
Single/ Single for manifold	Normally closed	N/A	87
		With MPS-V81	112
		With MPS-V9	120
		With MPS-10	122
	Self-holding	N/A	90
		With MPS-V81	115
		With MPS-V9	123
		With MPS-10	125

・Manifold Base

Specifications	Stations					
	1	2	3	4	5	6
Individual exhaust	18	25	32	40	47	54
Concentrated exhaust	57	74	90	106	122	138

Calculation of Weight for Manifold Type

Single unit weight×No. of stations+manifold base

Example 1) 5 stations manifold with MPS-9 sensor, self-holding valve and concentrated exhaust
123×5+122 = 737g

Example 2) 4 stations manifold without sensor, with normally closed valve and individual exhaust
87×4+40= 388g

Valve Specifications

Description ＼ Model number		Unit	CKV010-4E	LV290-4E
Valve structures			3 port, direct operated poppet valve	
Rated voltage		V	DC24	
Allowable voltage fluctuation		%	±10	
Power consumption (current value)	Vacuum generation	W(mA)	1(42)	1.3(54)
	Vacuum suspension			1.5(63)
Minimum energization time		ms	-	30
Insulation type			Class B	
Manual override operation			Non-lock	N/A
Display/surge killer			LED/diode	
Lead wire			Lead wire with connector(300mm)	
Weight (with lead wire)		g	15.3	19.5

Pressure Sensor Specifications

Description ＼ Model number		Unit	MPS-V81-SC1	MPS-V9-SC1	MPS-10-SC-B/W
Fluid			Air (vacuum), non-corrosive gas, non-flammable gas		
Diaphragm			Silicon diaphragm		
Rated pressure range		kPa	-100～0	-101.3～0	-101～500
Setting pressure range		kPa	-100～0	-101.3～10	-101～500
Withstand pressure		MPa	0.5	0.3	0.8
Ambient temperature range		℃	0～60(No freezing)	0～50(No freezing)	
Ambient humidity range		%RH	35～85(No condensation)		
Power supply voltage		V	DC12～24±10%, ripple(Vp-p)5% or less		DC24±10%, ripple(Vp-p)5% or less
Current consumption		mA	20	40	50 (not include the driven current for valve)
Switch output	Type		-	NPN open collector 1 output	
	Maximum load current	mA		125	
Analog output			DC1～5(±0.08) linearity 0.5%F.S. output impedance several Ω	DC1～5V(±0.1) linearity1% F.S. output impedance1kΩ	
Digital input(suction/blow off command)			-	-	Non-contact 1 input: 0V or 24V(more than 1msec)
Repeatability		%	-	±0.2F.S. 1digit or less	±0.3F.S. 1digit or less
Temperature characteristic		%	Less than±1F.S. (At standard temperature 25℃, range0～60℃)	Less than±2F.S. (At standard temperature 25℃, range0～50℃)	
Response time		ms	2 or less	1.5 or less	
Hysteresis			-	Variable	
Display	Digital		-	4-digital, 7-segment, red color LED	
	Operation		-	OUT:red color LED (ON lighting)	Output ON/OFF:red color LED Vacuum generation valve ON/OFF:green color LED
Display/set resolution		kPa	-	0.1	1
Protection	Reverse-current protection		With		
	Overvoltage protection		With		
	Output short circuit protection		-	With	
	IP class		IP40		
Vibration resistance			10～55Hz, total amplitude 1.5mm, 50m/s^2 2 hours each direction of XYZ		
Shock resistance		m/s^2	980, 3 times each direction of XYZ	980, 3 times each direction of XYZ	100, 3 times each direction of XYZ
Electrical connection			Grommet	Connector	
Cable			ϕ2.6 3 lead wires 0.82mm^2 2m	5 lead wires, 24AWG, UL AWM 20276, 1000mm Note1	
Connector			-	Maker:JST model :GHR-05V-S	

Note1)The white wire in cable of MPS-9 is not connected.

Performance Charts

X

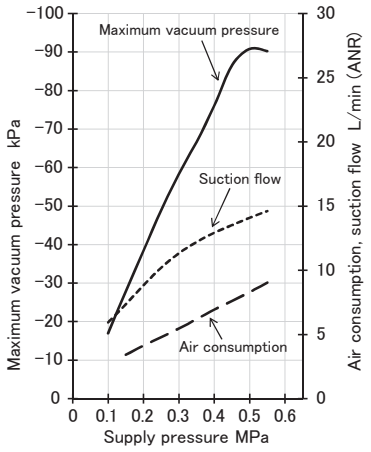

5S

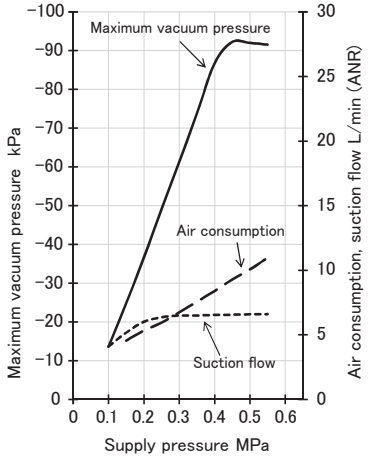

5R

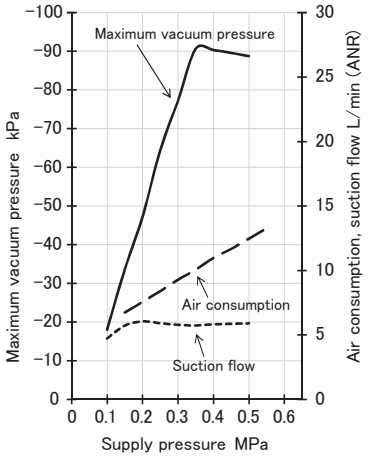

7S

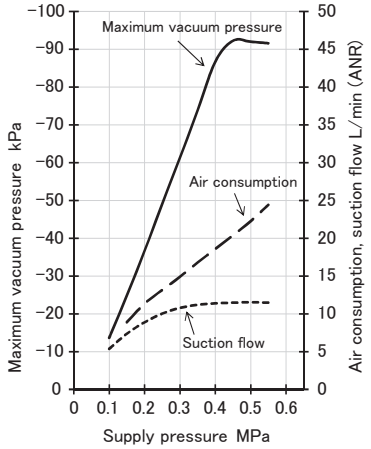

7R

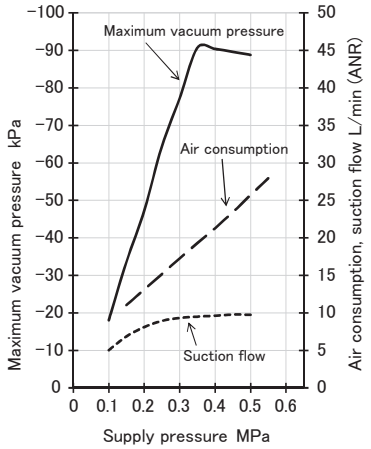

1S

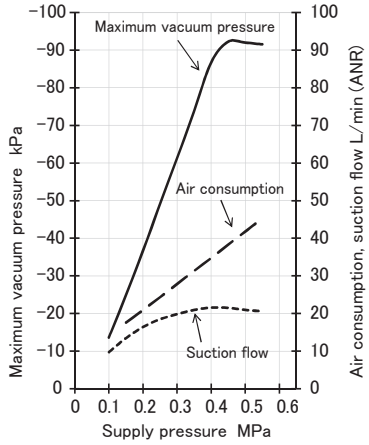

1R

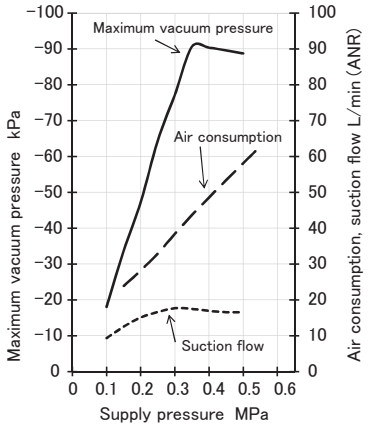

Suction Flow / Vacuum Pressure Characteristics

X

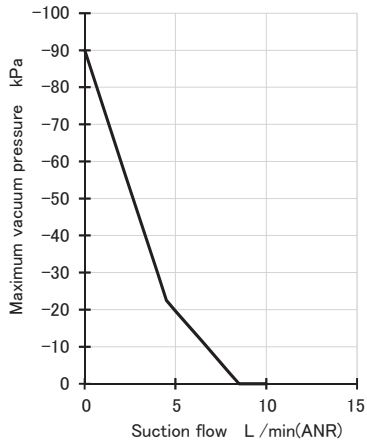

5S

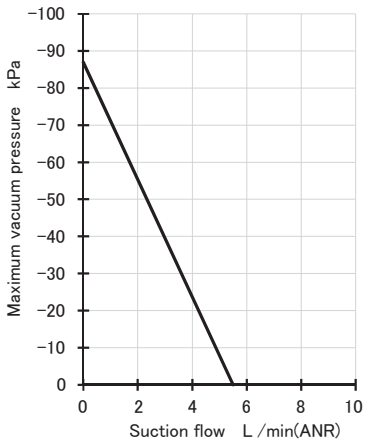

5R

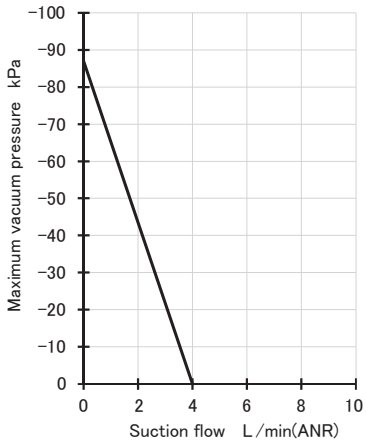

7S

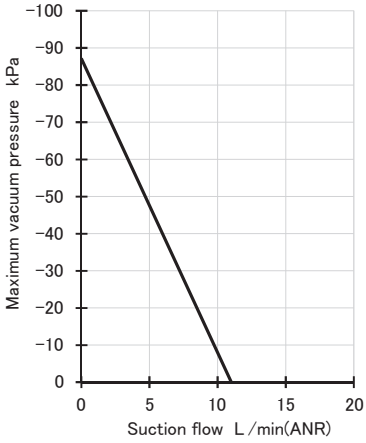

7R

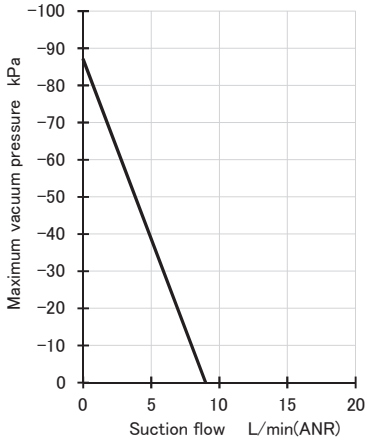

1S

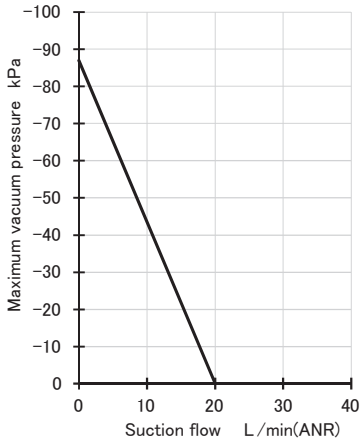

1R

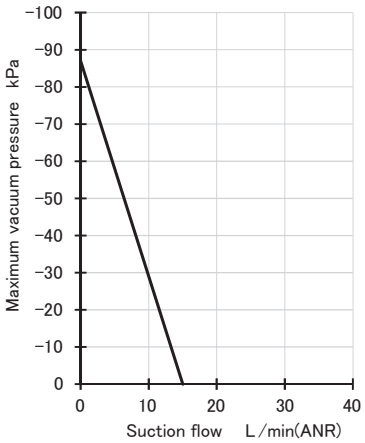

Dimensions

(mm)

Single Unit (concentrated exhaust)

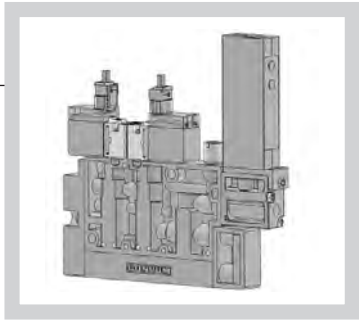

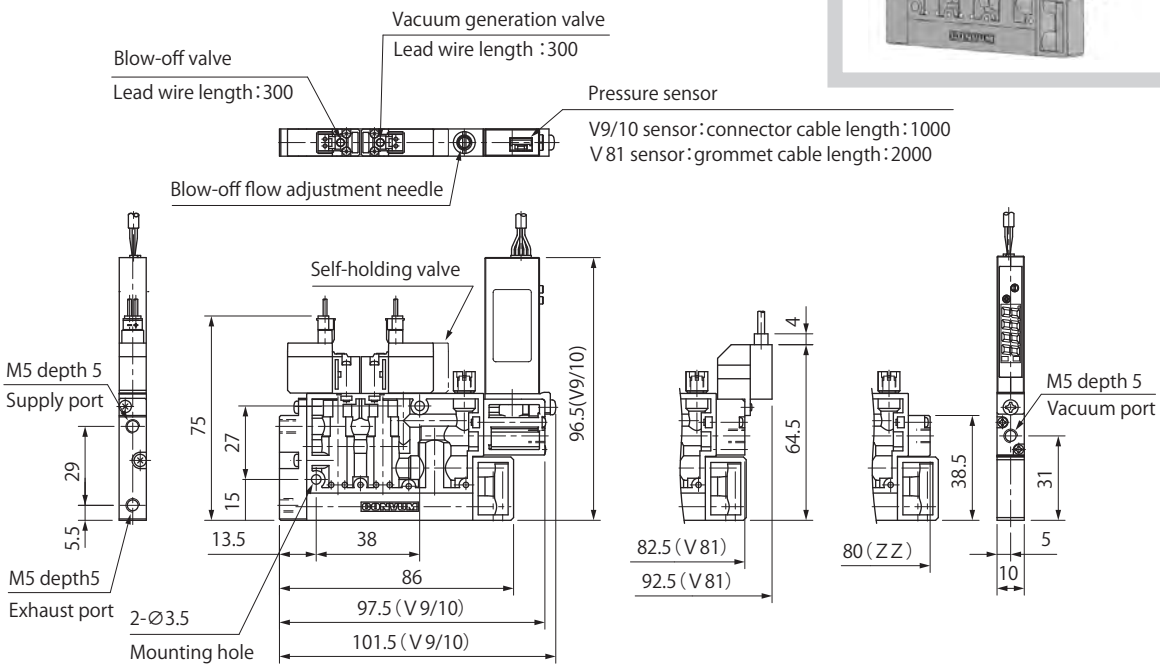

Single Unit (silencer exhaust)

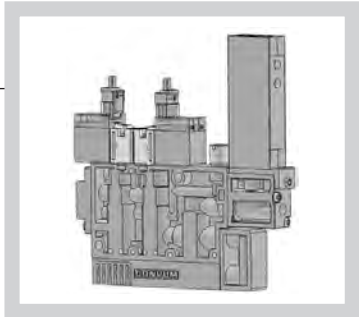

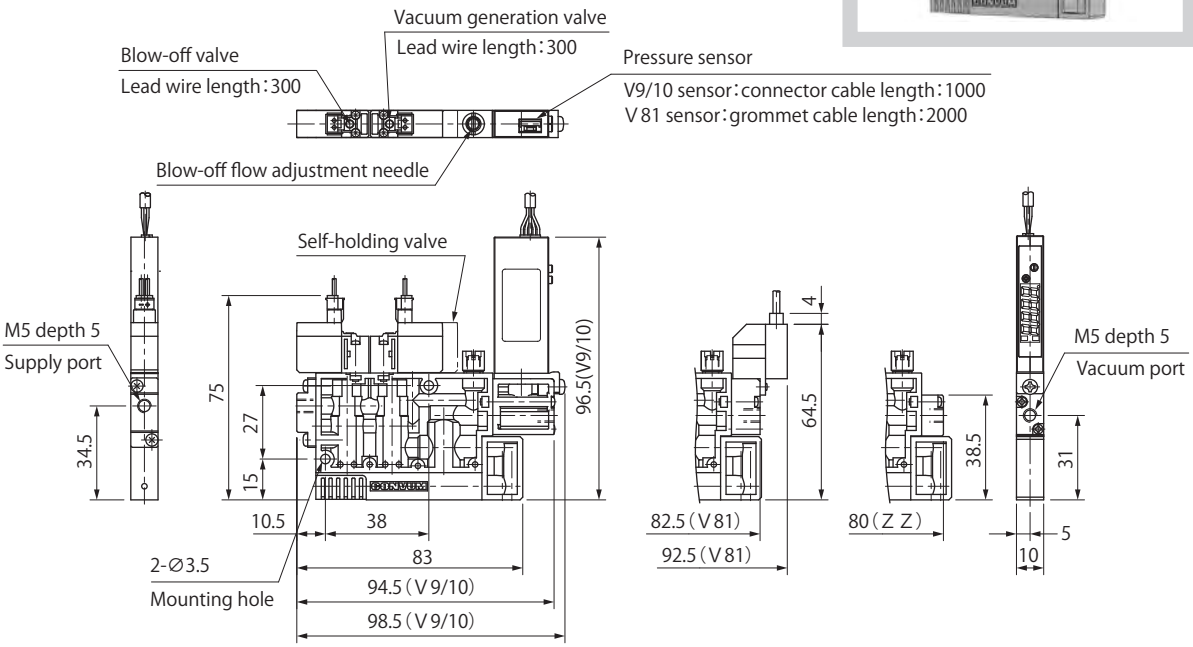

Dimensions

(mm)

Manifold Unit (concentrated exhaust)

n (No. of units)	1	2	3	4	5	6
A	20	30.5	41	51.5	62	72.5
B	27	37.5	48	58.5	69	79.5

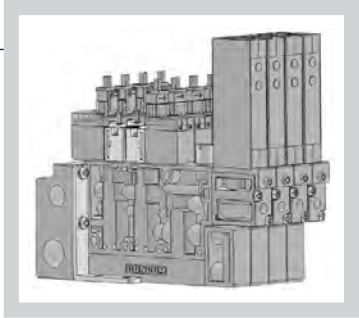

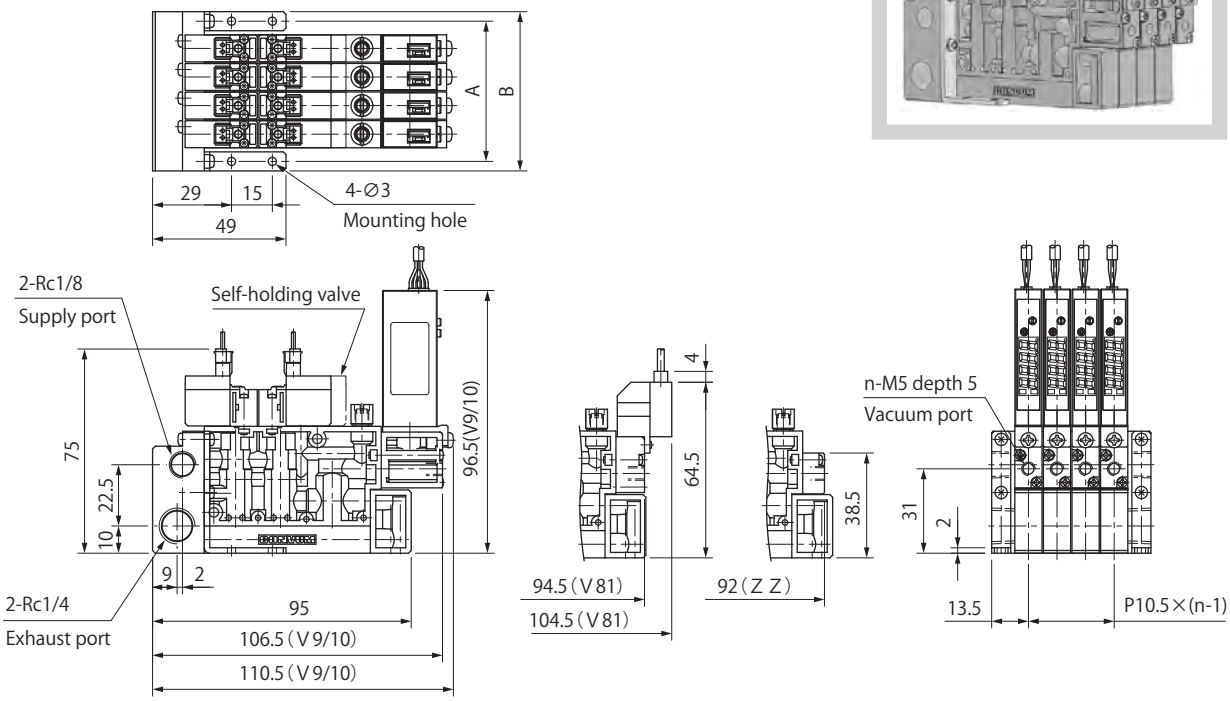

Manifold Unit (silencer exhaust)

n (No. of units)	1	2	3	4	5	6
A	20	30.5	41	51.5	62	72.5
B	27	37.5	48	58.5	69	79.5

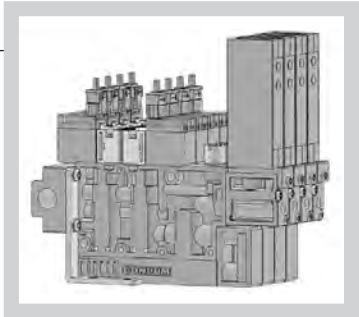

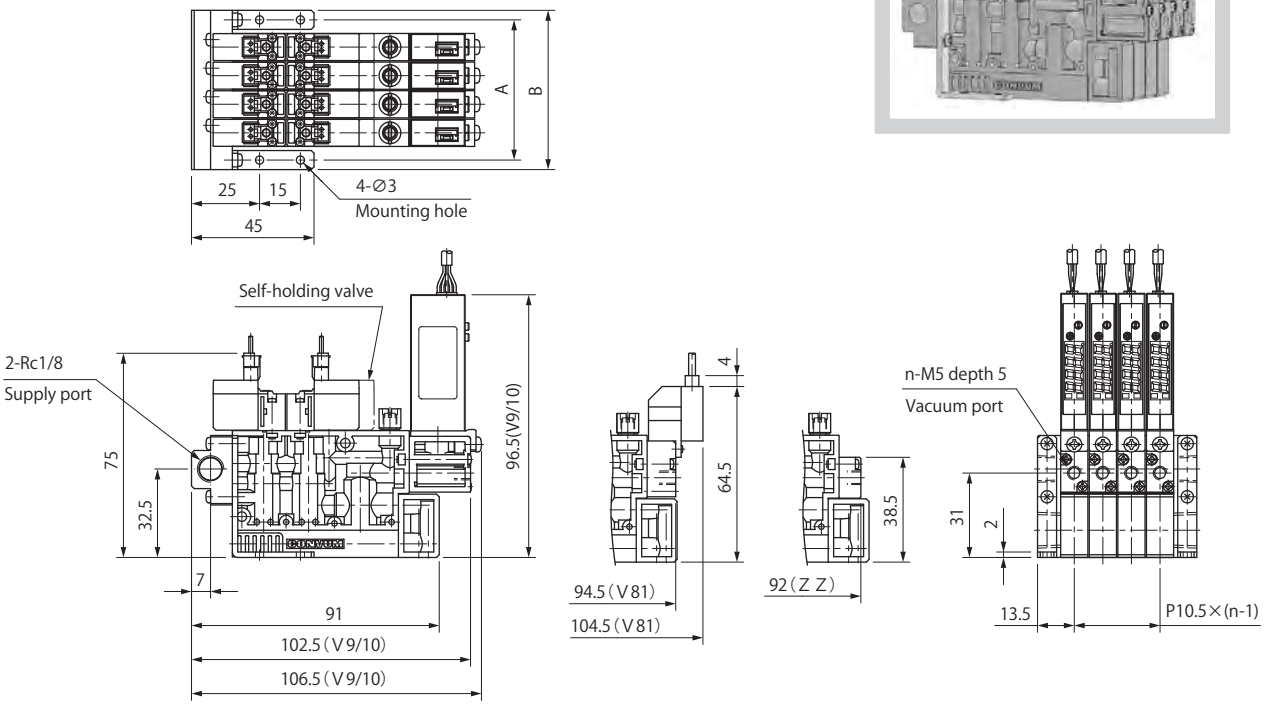

SC2 Series

High Speed CONVUM

RoHS

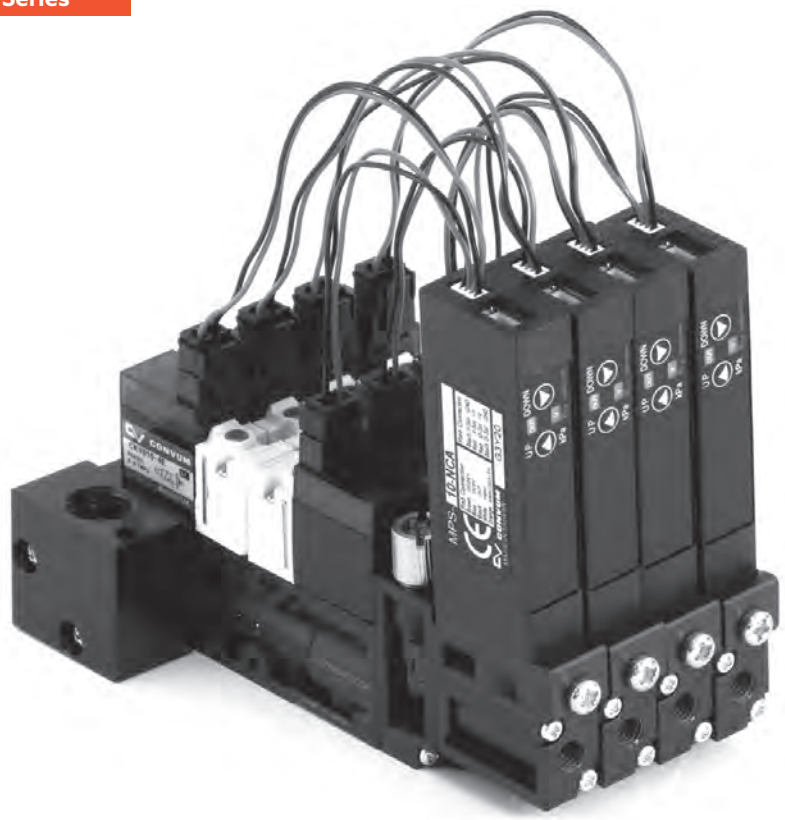

All-in-One Unit

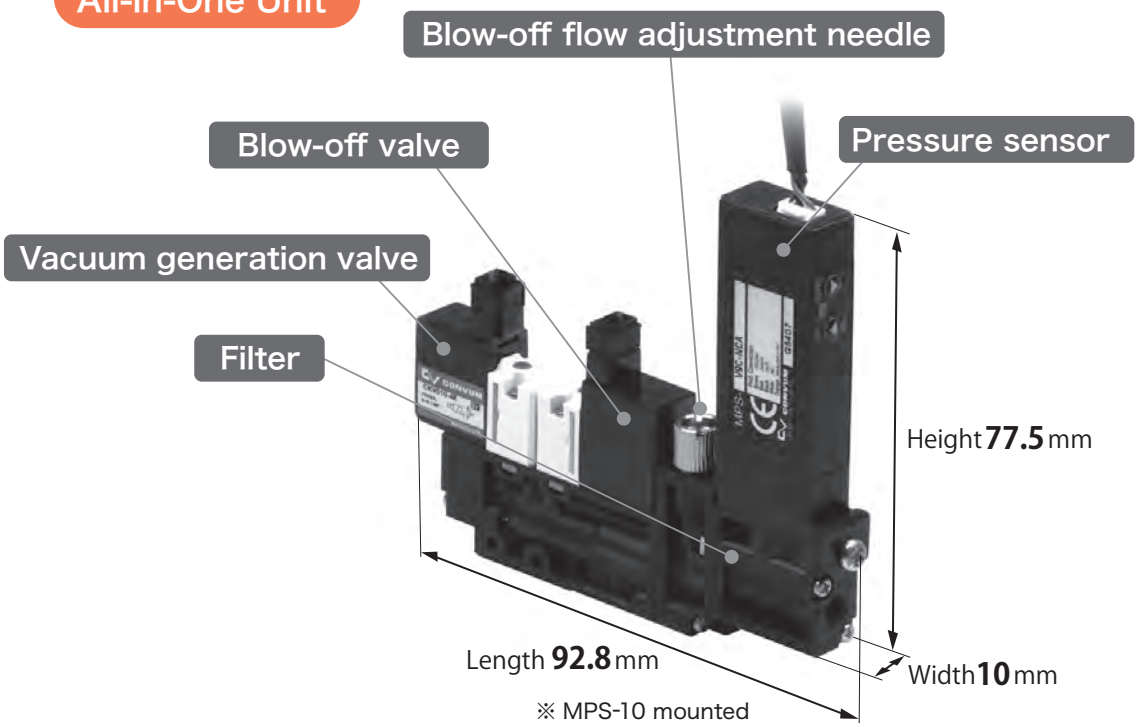

Compact, light weight

- Weight 53g (Single unit/without sensor)
- Width 10mm
- Resin body

※ The photograph is with MPS-10

Quick response

- Vacuum response time **20ms**

※ Condition:05HS type, up to -60kPa
Tube : ϕ4/ϕ2.5X50mm

Less wiring

- Wiring of I/O to PLC only need one five-cable.
  Wiring of vacuum generation/blow-off valve is unnecessary.
  It can save the space for the device, reduce the sequencer loading, and the operation time of electrical wiring.

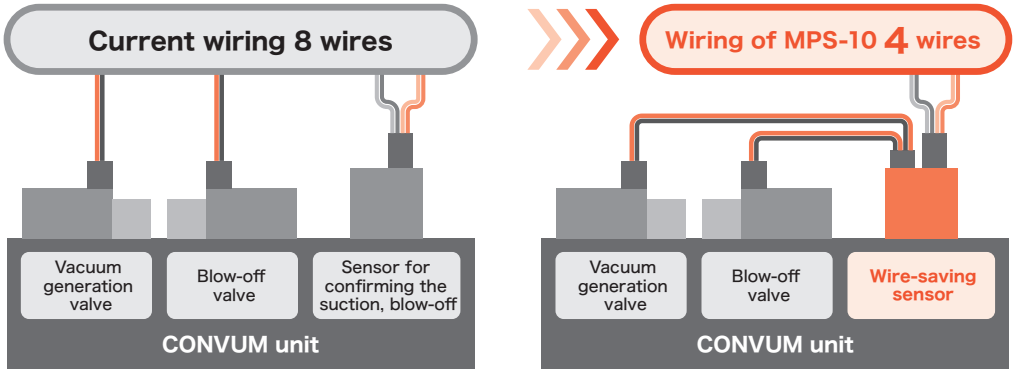

Detail of the sensor ••→ P.567

Up to 8 units can be mounted on the manifold

- Manifold can get the supply air together
- SC2 with different specifications can be putted together according to various purposes

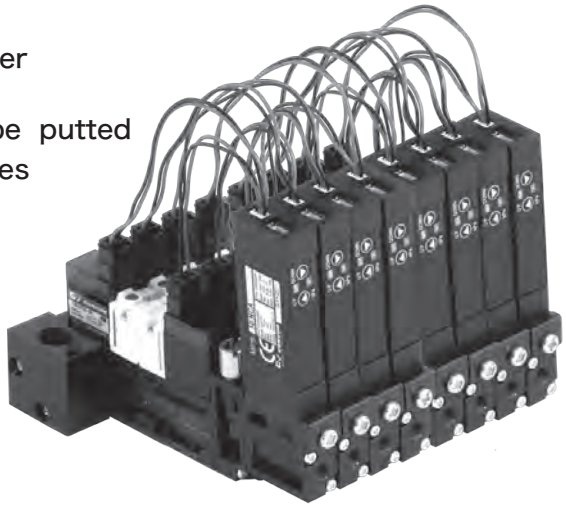

How to Order

In case of manifold

SC2	M	05HS	V9	S	3
	①	②	③	④	⑤

① Body Type

S	Single unit

M	Manifold unit

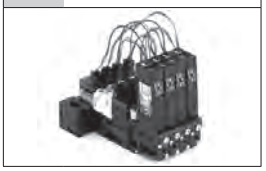

② Nozzle Type

Symbol	Nozzle size [mm]	Rated pressure [MPa]	Maximum vacuum pressure [kPa]	Suction flow [L/min(ANR)]	Air consumption [L/min(ANR)]
04HS	0.4	0.5	-85	2.5	8.5
05HS	0.5		-86.6	5.0	12
05HR		0.4		4.0	

③ Pressure Sensor

Symbol	Sensor type	Pressure range [kPa]	Display	Switch output	Analog output	Input specifications
V8	MPS-V81	-100～0	N/A	N/A	DC1～5V	N/A
V9	MPS-V9	-101.3～0	Digital	NPN 1output	DC1～5V	N/A
10	MPS-10	-101～500	Digital	NPN 1output	DC1～5V	Sink
ZZ	Without sensor					

※Please consult with us for PNP output type.

④ Vacuum Generation Valve Type

S	Normally closed
W	Self-holding

※Please select "S", when "05HR" selected in ②.

⑤ Manifold

Symbol	No. of stations
1	1 station
2	2 stations
3	3 stations
4	4 stations

Symbol	No. of stations
5	5 stations
6	6 stations
7	7 stations
8	8 stations

Recommend These model number below satisfy general needs and functions with product advantages. ※Please feel free to contact us.

Product code	Model number	Specifications		
		Nozzle size (mm)	Pressure sensor	Vacuum generation valve type
204000004	SC2S04HSV9S	0.4	Digital	Normally closed
204000012	SC2S05HSV9S	0.5	Digital	Normally closed
204000008	SC2S04HSV9W	0.4	Digital	Self-holding
204000016	SC2S05HSV9W	0.5	Digital	Self-holding
204000005	SC2S04HS10S	0.4	Reduction of wiring, digital	Normally closed
204000013	SC2S05HS10S	0.5	Reduction of wiring, digital	Normally closed

Maintenance Parts

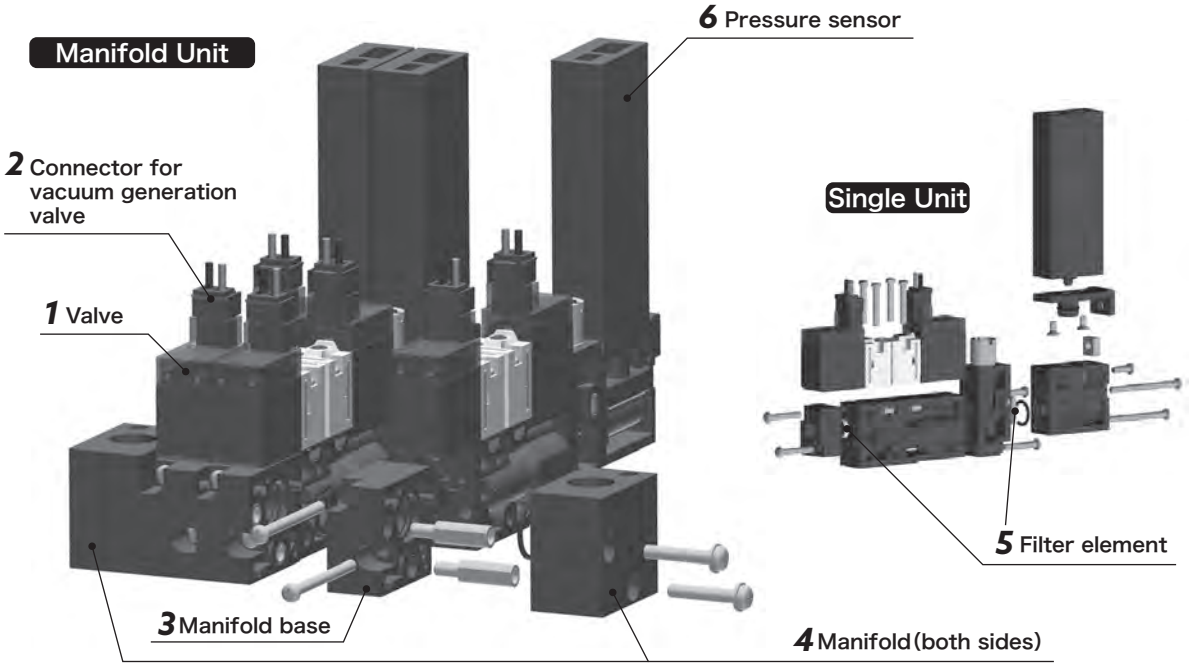

1 Valve

CKV010-4E
Common for vacuum generation and blow-off

※ Lead wire length 300mm
※ Gasket and mounting screw are included

LV290-4E
Self-holding type

※ Lead wire length 300mm
※ Gasket and mounting screw are included

2 Connector for Vacuum Generation Valve
※With lead wire

CA 2 — V4 — 6

Applicable valve

2	CKV010-4E
3	LV290-4E

Lead wire length (mm)

Blank	300
6	600
10	1000
20	2000 Note1
30	3000 Note2

Note1, 2) CKV010-4E only.

3 Manifold Base

SC2 — MB

※For increasing the number of manifold units or change from single unit to manifold unit

4 Manifold (Supply Port Parts of Both Sides)

SC2 — MB — R

5 Filter Element

SC1 — E
(5 per set)

6 Pressure Sensor
※O-ring and mounting screw are include

Model number	Specifications
MPS-V81-SC1	No display, analog output
MPS-V9-SC1	Digital display
MPS-10-SC-B	Wire-saving, digital display (normally closed, sink input)
MPS-10-SC-W	Wire-saving, digital display (self-holding, sink input)

7 Connector Cable for MPS-10 Sensor and Valve

MPS — 10 — VC — SC2 — W

Blank	Normally closed
W	Self-holding

8 Vacuum Port/Supply Port Plate
※Single unit only

SC1 — M5

※For changing from with sensor type to without sensor type

Construction

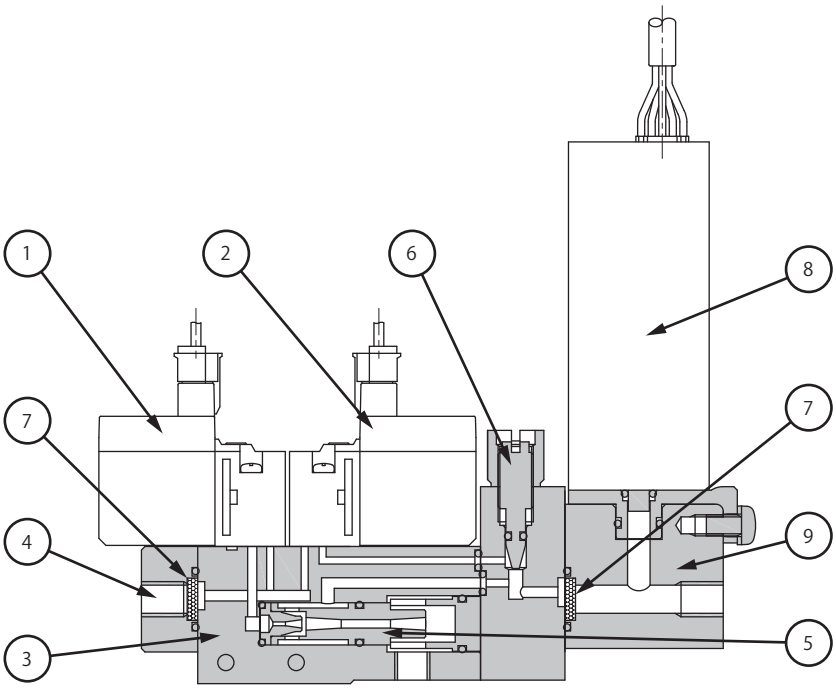

Component Parts

No.	Parts name	Material
1	Vacuum generation valve	-
2	Blow-off valve	-
3	Body	PA
4	Supply port	Aluminum
5	Nozzle kit	Aluminum, NBR
6	Blow-off flow adjustment needle	SUS, NBR
7	Filter element	PVF
8	Pressure sensor	-
9	Sensor base	PA

Symbol

Normally Closed(S)

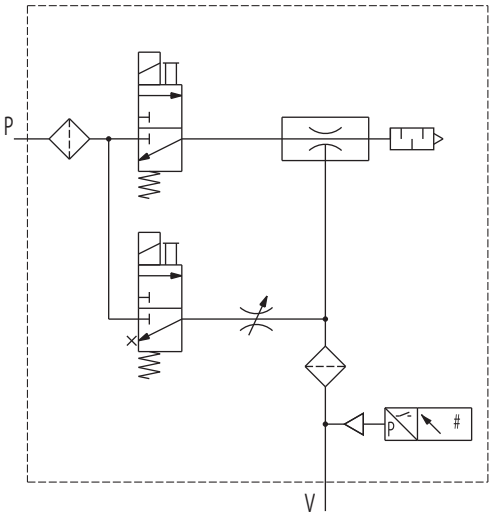

Self-holding(W)

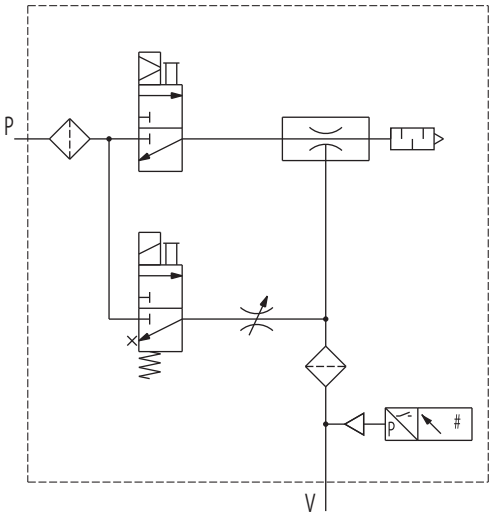

CONVUM Specifications

Description ＼ Model number	Unit	04HS	05HS	05HR
Nozzle size	mm	0.4	0.5	
Fluid		Non-lubricated compressed air		
Ambient temperature	℃	0～55 (No Freezing)		
Operating pressure range	MPa	0.2～0.6		
Vacuum generation valve type		Normally closed(S)/self-holding(W)		
Filter element filtration	μm	350		
Filter filtration area	mm^2	13.8		
Rated pressure	MPa	0.5		0.4
Maximum vacuum pressure	kPa	-85	-86.6	
Suction flow	L/min(ANR)	2.5	5.0	4.0
Blow-off flow (supply pressure・MPa)	L/min(ANR)	9(0.5)		8(0.4)
Air consumption	L/min(ANR)	8.5	12	

Valve Specifications

Description ＼ Model number		Unit	CKV010-4E	LV290-4E
Valve structures			3 port, direct operated poppet valve	
Rated voltage		V	DC24	
Allowable voltage fluctuation		%	±10	
Power consumption (current value)	Vacuum generation	W(mA)	1(42)	1.3(54)
	Vacuum suspension			1.5(63)
Minimum energization time		ms	-	30
Insulation type			Class B	
Manual override operation			Non-lock	N/A
Display/surge killer			LED/diode	
Lead wire			Lead wire with connector(300mm)	
Weight (with lead wire)		g	15.3	19.5

Weight (g)

Specifications			Weight
Single Unit	Vacuum generation valve type	Sensor	
Single	Normally closed	N/A	53
		With MPS-V81	82
		With MPS-V9	90
		With MPS-10	92
	Self-holding	N/A	56
		With MPS-V81	85
		With MPS-V9	93
		With MPS-10	95
Single for manifold	Normally closed	N/A	56
		With MPS-V81	85
		With MPS-V9	93
		With MPS-10	95
	Self-holding	N/A	59
		With MPS-V81	88
		With MPS-V9	96
		With MPS-10	98

・Manifold Base

No. of stations	1～8 stations
Weight	32

Calculation of Weight for Manifold Type

Single for manifold unit weight×No. of stations+manifold base

Example 1) 5 stations manifold with MPS-9 sensor, self-holding valve
96×5+32= 512g

Example 2) 4 stations manifold without sensor and normally closed valve
56×4+32= 256g

Pressure Sensor Specifications

Description ＼ Model number		Unit	MPS-V81-SC1	MPS-V9-SC1	MPS-10-SC-B/W
Fluid			Air (vacuum), non-corrosive gas, non-flammable gas		
Diaphragm			Silicon diaphragm		
Rated pressure range		kPa	-100～0	-101.3～0	-101～500
Setting pressure range		kPa	-100～0	-101.3～10	-101～500
Withstand pressure		MPa	0.5	0.3	0.8
Ambient temperature range		℃	0～60(No freezing)	0～50(No freezing)	
Ambient humidity range		%RH	35～85(No condensation)		
Power supply voltage		V	DC12～24±10%, ripple(Vp-p)5% or less		DC24±10%, ripple(Vp-p)5% or less
Current consumption		mA	20	40	50(not include the driven current for valve)
Switch output	Type		-	NPN open collector 1 output	
	Maximum load current	mA		125	
Analog output			DC1～5(±0.08) linearity 0.5%F.S. output impedance several Ω	DC1～5V(±0.1) linearity1% F.S. output impedance1kΩ	
Digital input(suction/blow off command)			-	-	Non-contact 1 input: 0V or 24V(more than 1msec)
Repeatability		%	-	±0.2F.S. 1digit or less	±0.3F.S. 1digit or less
Temperature characteristic		%	Less than±1F.S. (At standard temperature 25℃, range0～60℃)	Less than±2F.S. (At standard temperature 25℃, range0～50℃)	
Response time		ms	2 or less	1.5 or less	
Hysteresis			-	Variable	
Display	Digital		-	4-digital, 7-segment, red color LED	
	Operation		-	OUT:red color LED (ON lighting)	Output ON/OFF:red color LED Vacuum generation valve ON/OFF:green color LED
Display/set resolution		kPa	-	0.1	1
Protection	Reverse-current protection		With		
	Overvoltage protection		With		
	Output short circuit protection		-	With	
	IP class		IP40		
Vibration resistance			10～55Hz, total amplitude 1.5mm, 50m/s^2 2 hours each direction of XYZ		
Shock resistance		m/s^2	980, 3 times each direction of XYZ	980, 3 times each direction of XYZ	100, 3 times each direction of XYZ
Electrical connection			Grommet	Connector	
Cable			ϕ2.6 3 lead wires 0.82mm^2 2m	5 lead wires, 24AWG, UL AWM 20276, 1000mm Note1	
Connector			-	Maker:JST model :GHR-05V-S	

Note1)The white wire in cable of MPS-9 is not connected.

Performance Charts

04HS

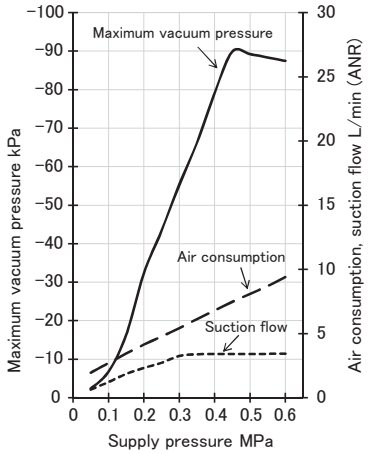

05HS

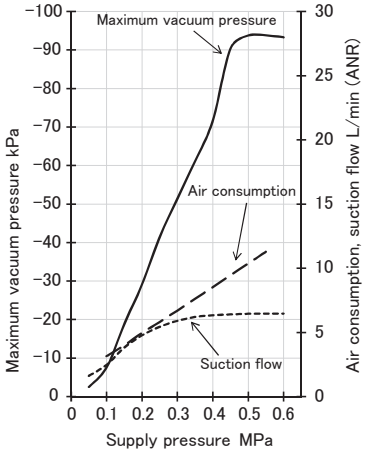

05HR

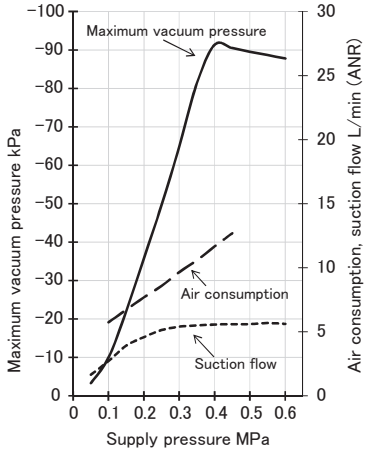

Suction Flow / Vacuum Pressure Characteristics

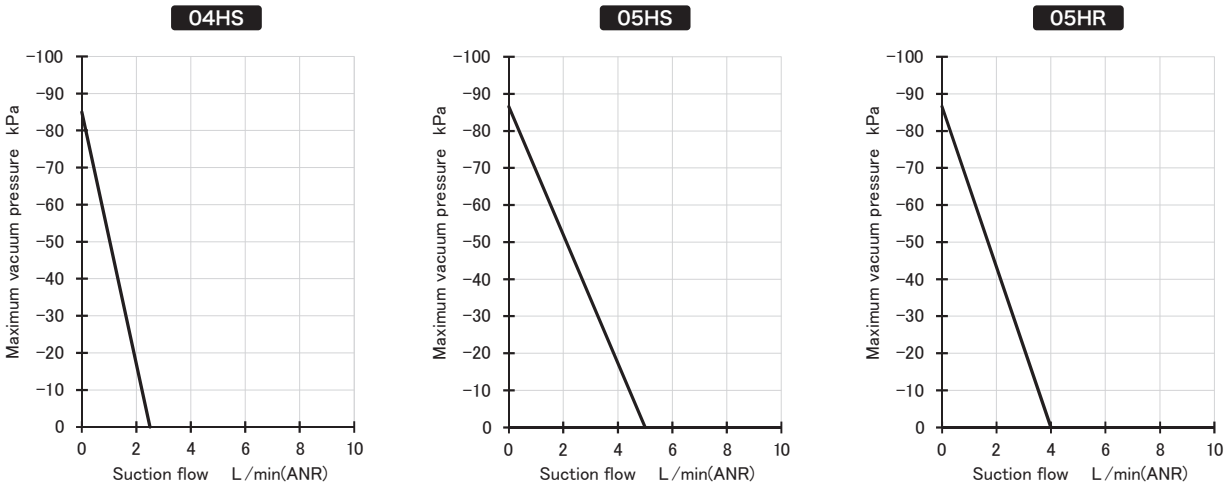

Dimensions

(mm)

Single Unit (without sensor)

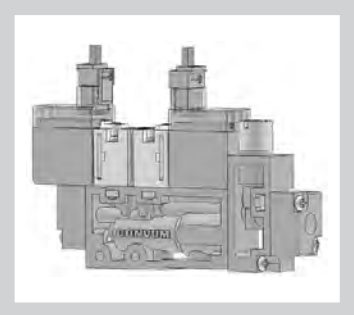

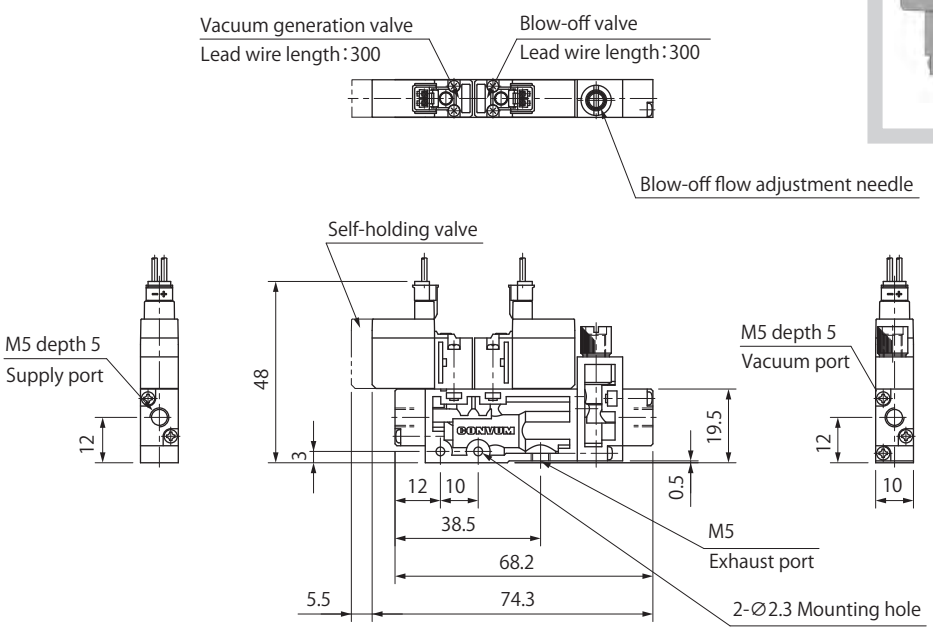

Single Unit (with sensor)

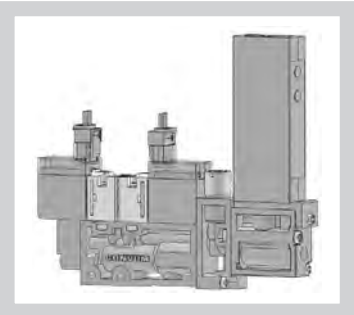

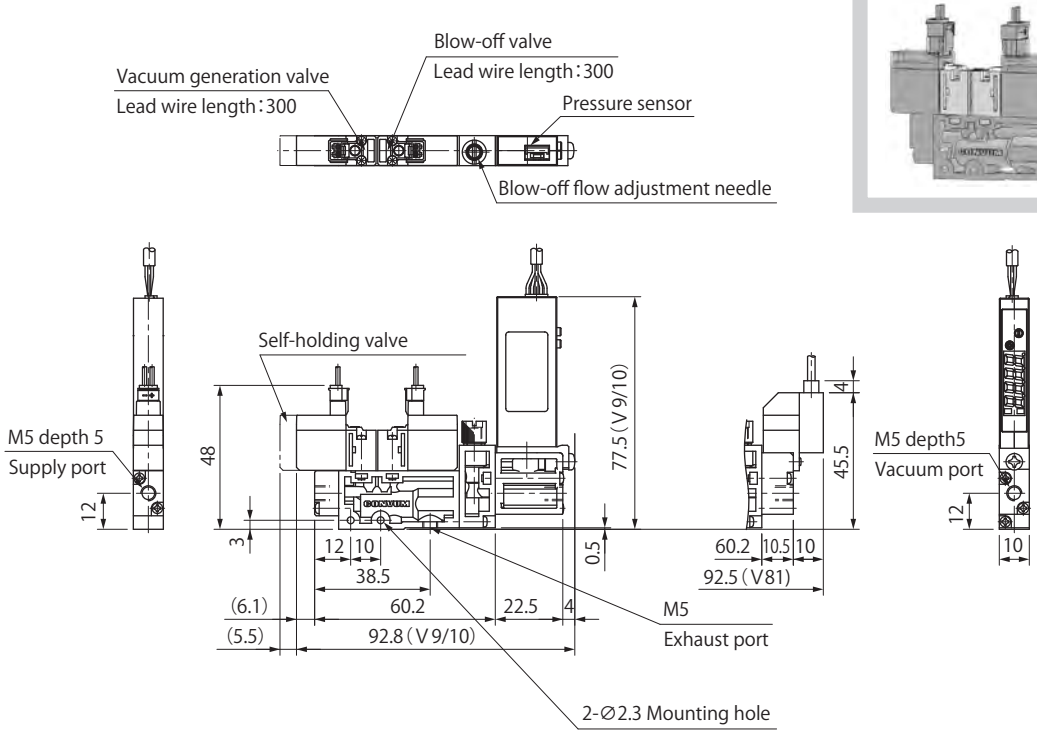

Dimensions

(mm)

Manifold Unit (without sensor)

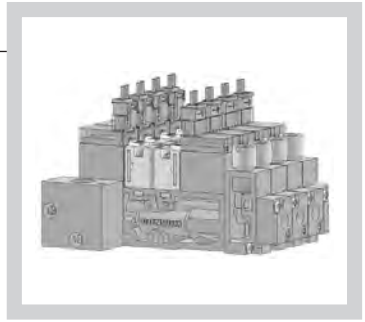

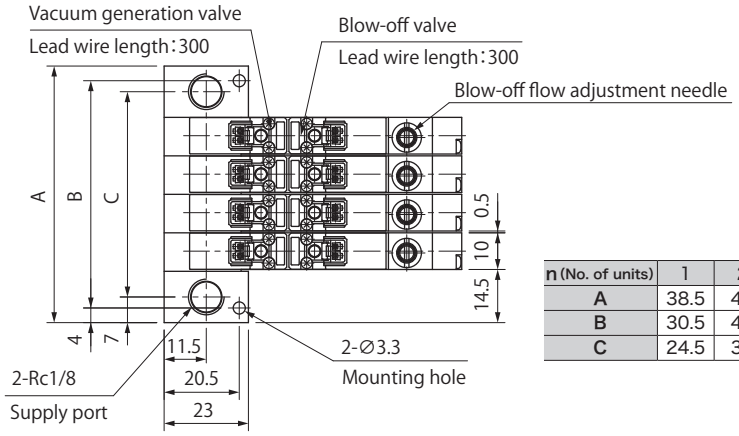

n (No. of units)	1	2	3	4	5	6	7	8
A	38.5	49	59.5	70	80.5	91	101.5	112
B	30.5	40	51.5	62	72.5	83	93.5	104
C	24.5	34	45.5	56	66.5	77	87.5	98

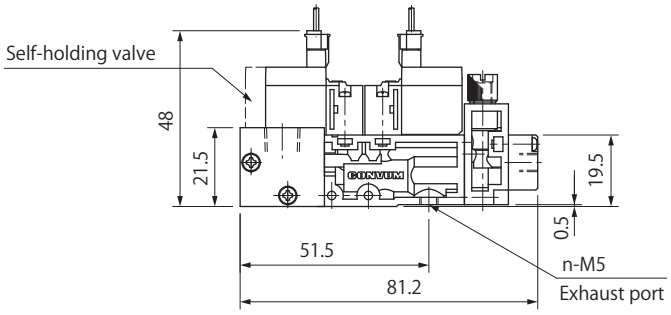

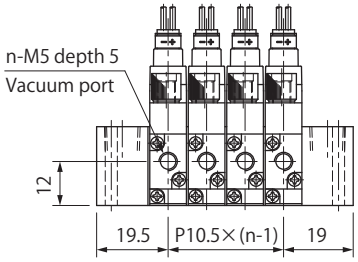

Manifold Unit (with sensor)

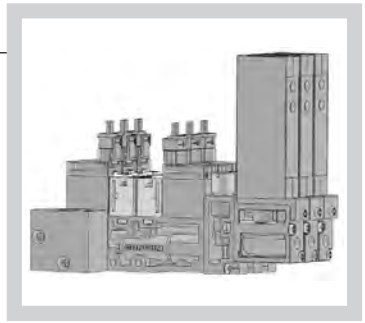

n (No. of units)	1	2	3	4	5	6	7	8
A	38.5	49	59.5	70	80.5	91	101.5	112
B	30.5	40	51.5	62	72.5	83	93.5	104
C	24.5	34	45.5	56	66.5	77	87.5	98

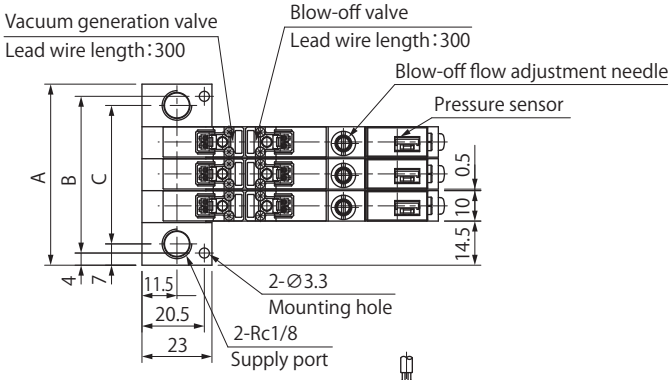

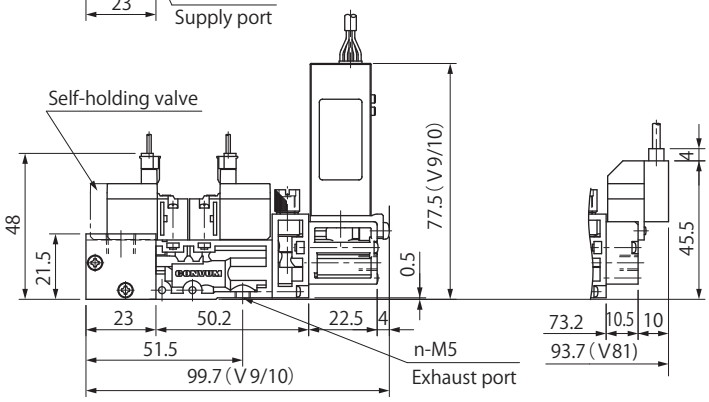

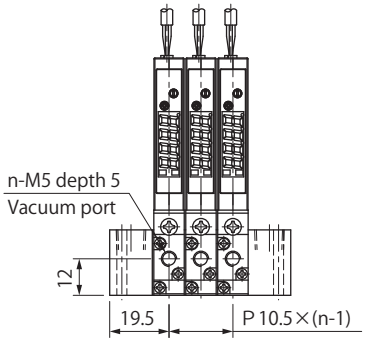

SC3 Series

Medium Size Smart CONVUM

RoHS

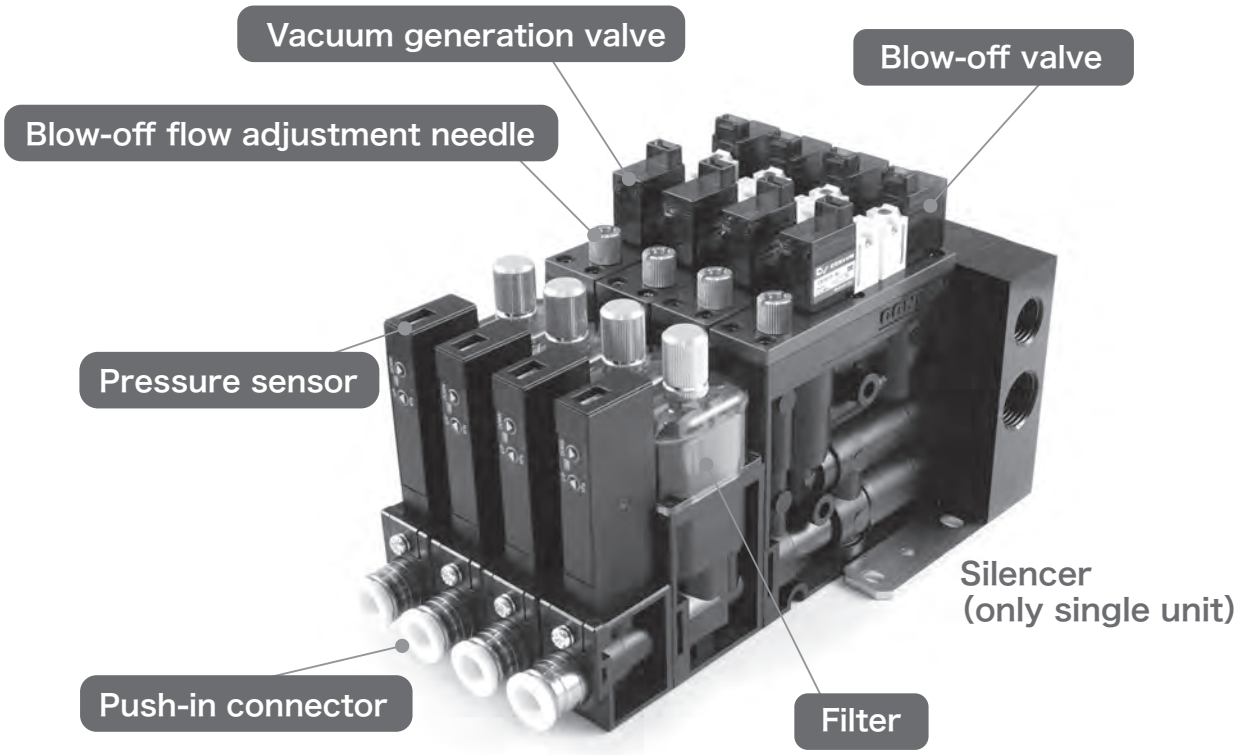

Can select the combination flexibly

Free selection of with or without sensor, filter

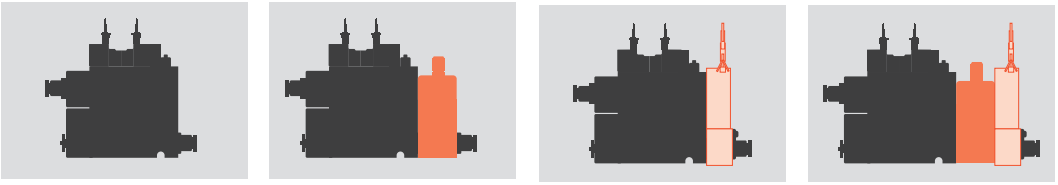

Only body | With filter | With sensor | With filter + sensor

Holding workpiece at an emergency stop

With self-holding valve,
it is possible to keep vacuum, and
prevent the workpiece from falling.

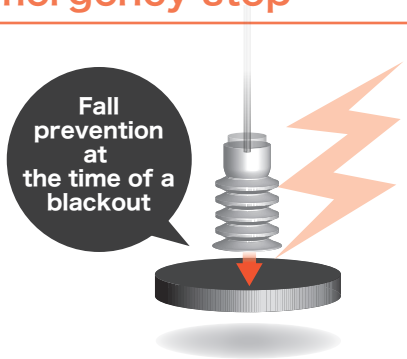

Air consumption will be reduced

More than 50% of air consumption can be saved with the MPS-10 energy-saving sensor

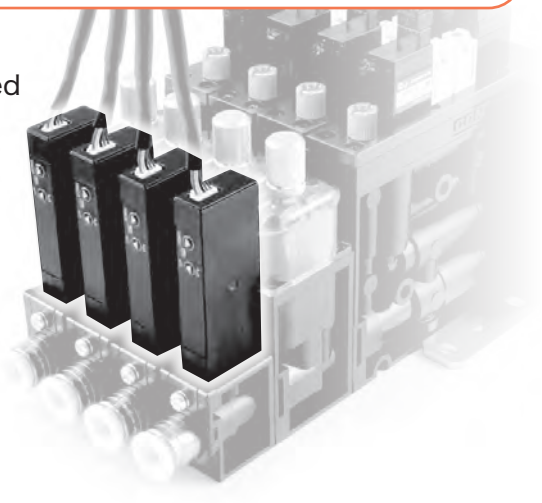

Detail of the sensor ••→ P.567

Releases workpieces quickly and certainly

Mounted with the check valve that can be used to release workpieces without wasting blow-off air
※Max 200L/min (ANR)

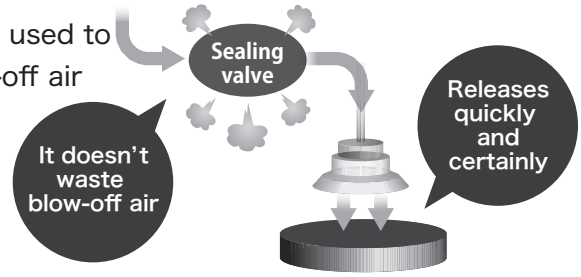

It is operatable with supply pressure 0.25 MPa at the minimum multi-stage nozzle available

- Multi-stage nozzle can be selected
- Compact design, high suction flow

SC3 Medium Size Smart CONVUM

How to Order

In case of manifold

SC3	M	10S	V9N	C	F	S	A	T	3
	①	②	③	④	⑤	⑥	⑦	⑧	⑨

①Body Type

S	Single unit

M	Manifold unit

②Nozzle Type

Symbol	Nozzle type	Nozzle size [mm]	Rated pressure [MPa]	Maximum vacuum pressure [kPa]	Suction flow Note1 [L/min(ANR)]	Air consumption [L/min(ANR)]
10S	Single	1.0	0.5	-90	23 (25)	48
13S		1.3		-89	38 (42)	74
15S		1.5		-91	57 (60)	100
10L		1.0		-65	43 (45)	48
13L		1.3		-57	66 (78)	74
15L		1.5		-63	74 (90)	100
10R		1.0	0.25	-86	20 (21)	47
13R		1.3	0.35	-88	30 (33)	70
15R		1.5		-90	50 (54)	100
07X	Multi-stage	0.7	0.5		37 (48)	22
10X		1.0			46 (56)	48
15X		1.5			65 (88)	100

Note1) With the silencer exhaust, ( ) is with the individual exhaust.

⑤Filter

F	With
Z	Without

⑥Exhaust Type

S	Silencer exhaust	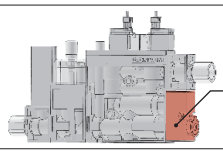 Silencer
P	Individual exhaust Note1	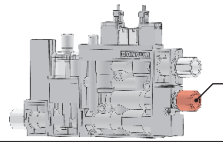 Exhaust port
C	Concentrated exhaust (in case of manifold) Note2	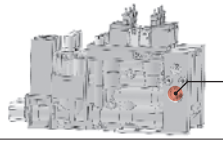 Exhaust port

Note1) When "T"selected in ⑧, the exhaust port will be Rc1/4.
Note2) Only "C"type available with manifold unit.
※ Please select check valve (select C or E in ④) when concentrated exhaust selected for manifold type and then it can prevent the air wraparounding to the vacuum port.

⑨Manifold (in case of manifold)

Symbol	No. of stations
1	1station
2	2 stations
3	3 stations
4	4 stations
5	5 stations

※The number of maximum simultaneous operation is informed on right table.

The number of maximum simultaneous operation for manifold type

Nozzle type	10S	13S	15S	10L	13L	15L	10R	13R	15R	07X	10X	15X
The number of maximum simultaneous operation	5 stations				4 stations	5 stations		2 stations	3 stations	5 stations		

Note1) The port on both sides: ϕ8

③Pressure Sensor

Symbol	Sensor type	Pressure range [kPa]	Display	Switch output	Analog output	Input specifications
V9N	MPS-V9	-101.3～0	Digital	NPN1outpit	DC1～5V	N/A
10N	MPS-10[Note1.2]	-101～500	Digital	NPN1outpit	DC1～5V	Sink
ZZ	Without sensor					

Note1)Energy-saving pressure sensor (solenoid valve control function mode)
Note2)Please select check valve (select C or E in ④) in case of using energy-saving function.
※ Please consult with us for PNP output type.

④Sealing Valve/Check Valve

Symbol	Sealing valve	Check valve
C	With	With
D	With	N/A
E	N/A	With

⑦Vacuum Generation Valve Type

A	Normally opened
B	Normally closed
W	Self-holding [Note1]

Note1) The energy-saving function for the sensor doesn't work if the self-holding valve is selected.

⑧Port Size

Symbol	Supply port [Note1]	Vacuum port
T	ϕ 8	ϕ 8
R	Rc1/4	Rc1/4
N	1/4-27NPT	1/4-27NPT
G	G1/4	G1/4

Note1) The "T"port will be Rc1/4 when manifold type selected.

Recommend

These model number below satisfy general needs and functions with product advantages.

※Please feel free to contact us.

Product code	Model number	Specifications						
		Nozzle size (mm)	Pressure sensor	Check valve	Sealing valve	Filter	Eshaust	Vacuum generation valve type
204100581	SC3S10SZZCFSBT	1.0	N/A	With	With	With	Silencer	Normally closed
204108501	SC3S15XZZCFSBT	Multi-stage/1.5	N/A	With	With	With	Silencer	Normally closed
204100005	SC3S10SV9NCFSBT	1.0	Digital	With	With	With	Silencer	Normally closed
204107925	SC3S15XV9NCFSBT	Multi-stage/1.5	Digital	With	With	With	Silencer	Normally closed
204100293	SC3S10S10NCFSBT	1.0	Digital, energy-saving	With	With	With	Silencer	Normally closed
204108213	SC3S15X10NCFSBT	Multi-stage/1.5	Digital, energy-saving	With	With	With	Silencer	Normally closed

Maintenance Parts

Single Unit

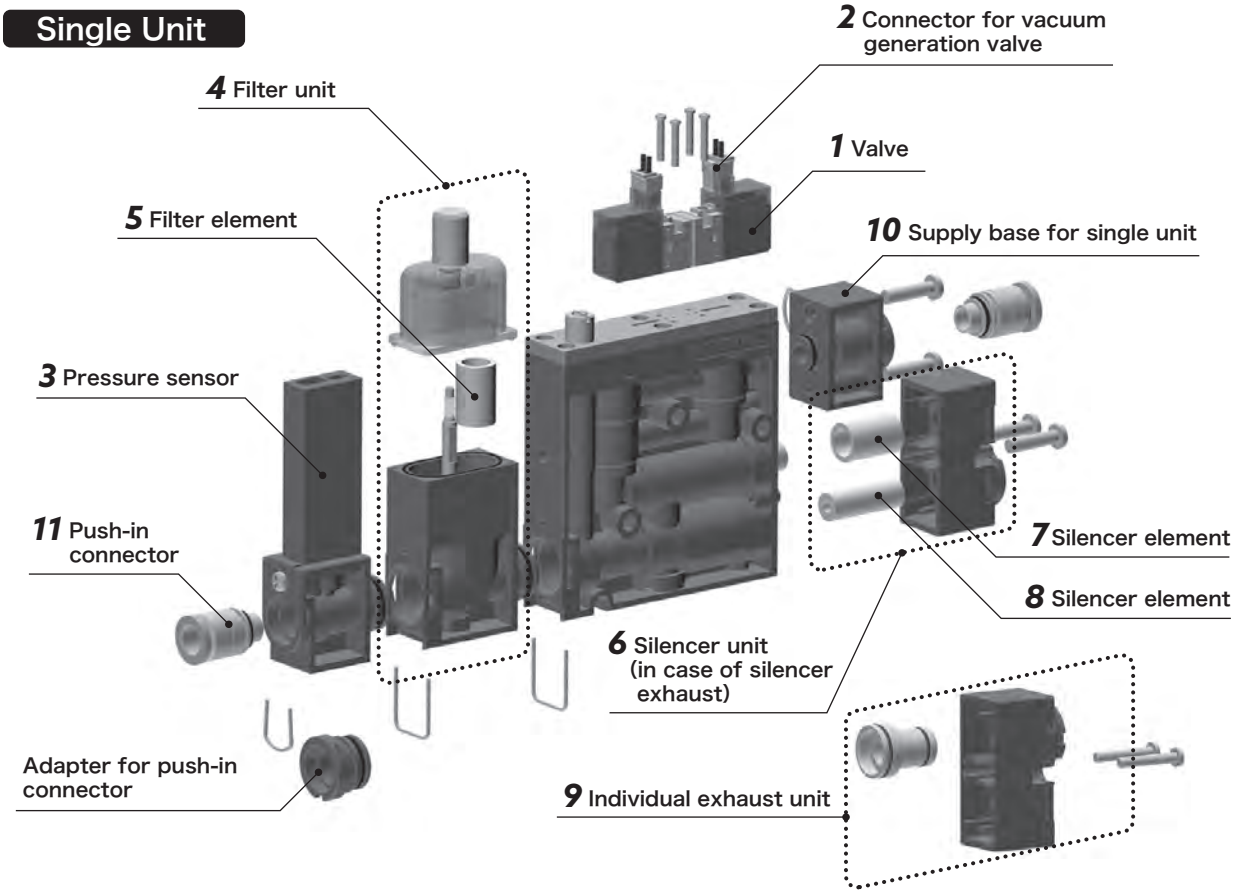

Manifold Unit

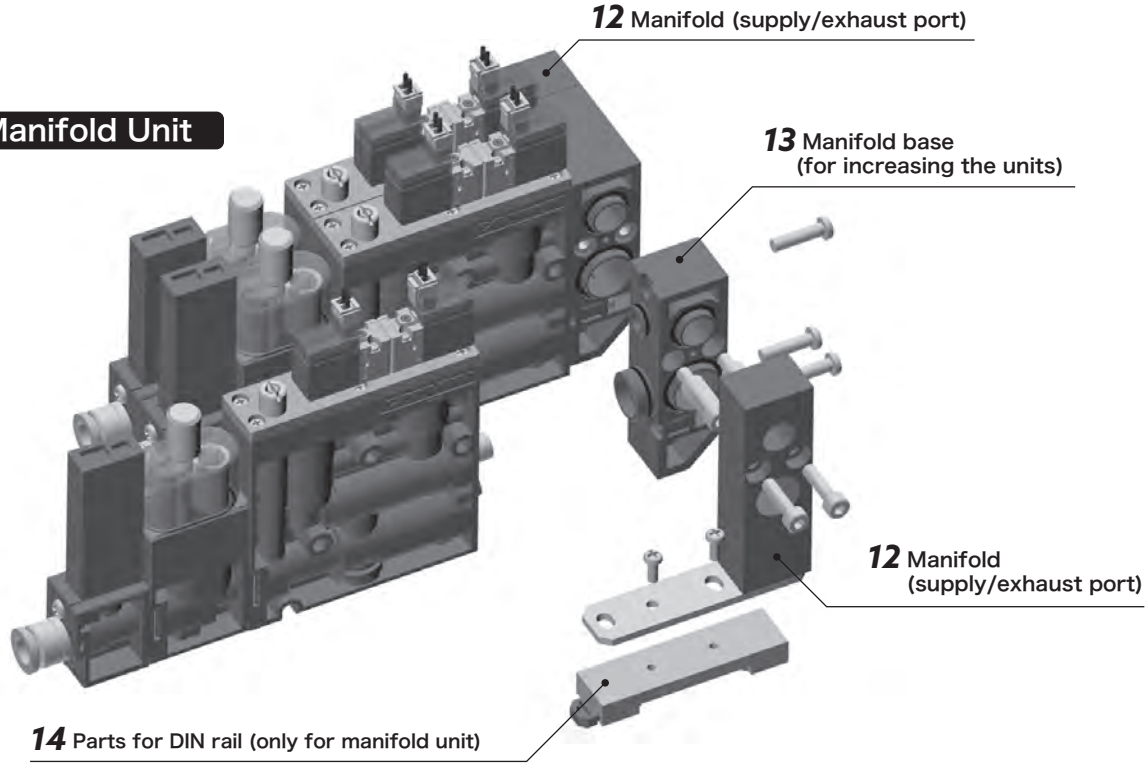

1 Valve

CKV010-4E
Common for vacuum generation and blow-off

※ Lead wire length 300mm
※ Gasket and mounting screw are included

LV290-4E
Self-holding type

※ Lead wire length 300mm
※ Gasket and mounting screw are included

2 Connector for Vacuum Generation Valve
※With lead wire

CA 2 — V4 — 6

Applicable valve

2	CKV010-4E
3	LV290-4E

Lead wire length (mm)

Blank	300
6	600
10	1000
20	2000 Note1
30	3000 Note2

Note1,2) CKV010-4E only

3 Pressure Sensor
※O ring and mounting screw are included

Model number	Specifications
MPS-V9N-SC3	Digital display
MPS-10N-SC3-A	Energy-saving, digital display (normally opened, sink input)
MPS-10N-SC3-S	Energy-saving, digital display (normally closed, sink input)
MPS-10N-SC3-W	Wire-saving, digital display (self-holding, sink input)

4 Filter Unit / 5 Filter Element

SC3 — FU

FU	Filter unit (body,with element)
FE	Filter element (only element)

6 Silencer Unit ※Single unit only / 7 8 Silencer Element ※Single unit only / 9 Individual Exhaust Unit

SC3 — SU01

Symbol	Specifications	Applicable nozzle
SU01	Silencer unit (body, with element)	13L,13R,15S,15L,15R,07X,10X,15X
SU02	Silencer unit (body, with element)	10S,10L,10R,13S
SU03	The parts required when change from individual exhaust to silencer exhaust	All type
SE01	Silencer element (only element) ⑦ only	13L,13R,15S,15L,15R,07X,10X,15X
SE02	Silencer element (only element) ⑦ and ⑧	10S,10L,10R,13S
PU	Individual exhaust unit (without push-in connector)	All type

10 Supply Base for Single Unit
※With mounting screw, without push-in connector

SC3-PS

※The part required when use manifold unit as single unit.

11 Push-in Connector

SC3 — T — A

Connector size

T	ϕ8
R	Rc1/4
N	1/4-27NPT
G	G1/4

Adapter

Blank	N/A
A	With

※The adapter is necessary to mount the push-in connector for the unit without sensor and filter.

12 Manifold (Supply/Exhaust Port)
※2 per set, mounting screws are included

SC3 — MB — R

Port screw size

R	Rc1/4
N	1/4-27NPT
G	G1/4

14 Parts for DIN rail (only for maniflod unit)
※2 per set, mounting screws are included

SC3-DIN

13 Manifold Base (for increasing the units)
※Mounting screw, adapter are included

SC3-MB

15 Connector Cable for MPS-10 Sensor and Valve

MPS — 10 — VC — SC3 — W

Blank	Normally opened, Normally closed
W	Self-holding

Construction

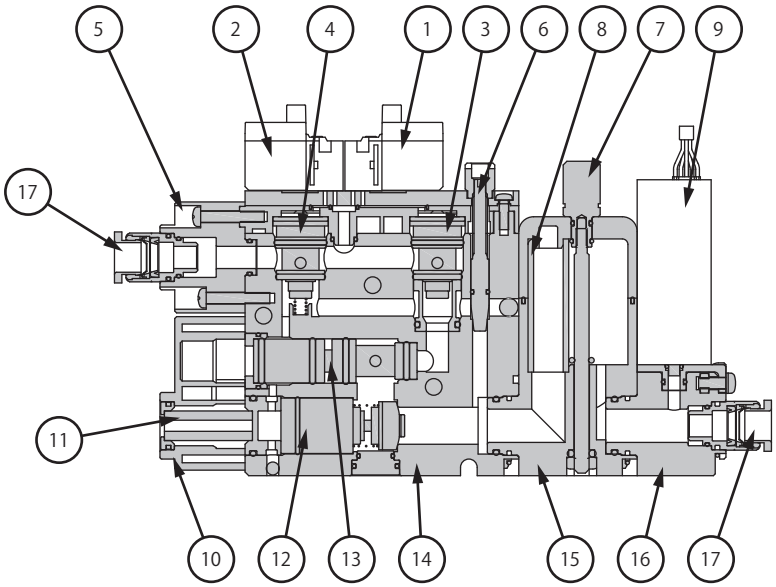

Component Parts

No.	Parts name	Material
1	Vacuum generation valve	-
2	Blow-off valve	-
3	Vacuum generation poppet valve	Aluminum, SUS, FKM, NBR
4	Blow-off poppet valve	Aluminum, SUS, FKM, NBR
5	Supply port	PA, NBR
6	Blow-off flow adjustment needle	Aluminum, SUS, FKM
7	Filter	PA,aluminum, SUS, NBR
8	Filter element	PVF
9	Pressure sensor	-
10	Silencer	PA, SUS
11	Silencer element	PVF
12	Check valve	Aluminum, SUS, FKM, NBR
13	Nozzle kit	PA,aluminum, FKM, NBR
14	Body	PA, SUS, NBR
15	Filter base	PA, FKM
16	Sensor base	PA, NBR
17	Push-in connector	-

Symbol

Normally Opened

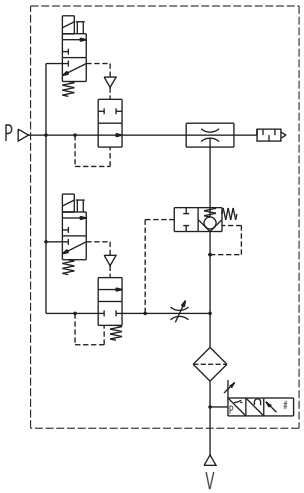

Normally Closed

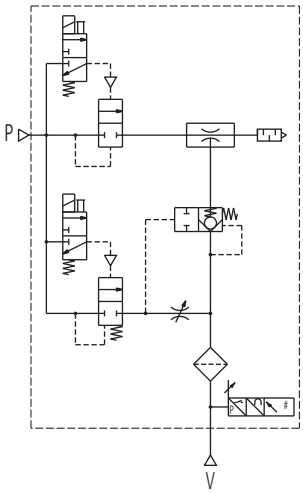

Self-holding

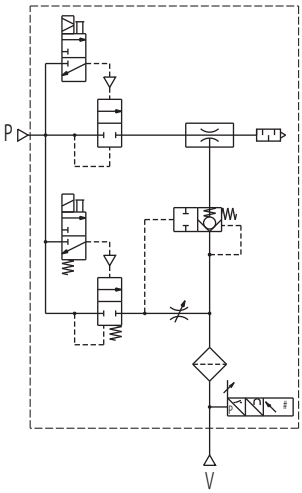

CONVUM Specifications

Description \ Model number		Unit	10S	13S	15S	10L	13L	15L	10R	13R	15R	07X	10X	15X
Nozzle type			Single									Multi-stage		
Nozzle size		mm	1.0	1.3	1.5	1.0	1.3	1.5	1.0	1.3	1.5	0.7	1.0	1.5
Fluid			Non-lubricated compressed air											
Ambient temperature		℃	0～55(No Freezing)											
Operating pressure range		MPa	0.2～0.6											
Vacuum generation valve type			Normally opened(A)/normally closed(B)/self-holding(W)											
Filter element filtration		μm	150											
Filter filtration area		mm^2	1071											
Rated pressure		MPa	0.5						0.25	0.35		0.5		
Maximum vacuum pressure		kPa	-90	-89	-91	-65	-57	-63	-86	-88	-90			
Suction flow	Silencer exhaust	L/min(ANR)	23	38	57	43	66	74	20	30	50	37	46	65
	Individual exhaust	L/min(ANR)	25	42	60	45	78	90	21	33	54	48	56	88
Blow-off flow		L/min(ANR)	200(With sealing valve)											
Air consumption		L/min(ANR)	48	74	100	48	74	100	47	70	100	22	48	100

Valve Specifications

Description \ Model number		Unit	CKV010-4E	LV290-4E
Valve structures			3 port, direct operated poppet valve	
Rated voltage		V	DC24	
Allowable voltage fluctuation		%	±10	
Power consumption (current value)	Vacuum generation	W(mA)	1(42)	1.3(54)
	Vacuum suspension			1.5(63)
Minimum energization time		ms	-	30
Insulation type			Class B	
Manual override operation			Non-lock	N/A
Display/surge killer			LED/diode	
Lead wire			Lead wire with connector(300mm)	
Weight (with lead wire)		g	15.3	19.5

Pressure Sensor Specifications

Description \ Model number		Unit	MPS-V9N-SC3	MPS-10N-SC3-A/S/W
Fluid			Air (vacuum), non-corrosive gas, non-flammable gas	
Diaphragm			Silicon diaphragm	
Rated pressure range		kPa	-101.3～0	-101～500
Setting pressure range		kPa	-101.3～10	-101～500
Withstand pressure		MPa	0.3	0.8
Ambient temperature range		℃	0～50(No freezing)	
Ambient humidity range		%RH	35～85(No condensation)	
Power supply voltage		V	DC12~24±10%, ripple(Vp-p)5% or less	DC24±10%, ripple(Vp-p)5% or less
Current consumption		mA	40	50 (not include the driven current for valve)
Switch output	Type		NPN open collector 1 output	
	Maximum load current	mA	125	
Analog output			DC1～5V(±0.1) linearity1% F.S. output impedance1kΩ	
Digital input(suction/blow off command)			-	Non-contact 1 input: 0V or 24V(more than 1msec)
Repeatability		%	±0.2F.S. 1digit or less	±0.3F.S. 1digit or less
Temperature characteristic		%	Less than±2F.S. (At standard temperature 25℃, range0～50℃)	
Response time		ms	1.5 or less	
Hysteresis			Variable	
Display	Digital		4-digital, 7-segment, red color LED	
	Operation		OUT:red color LED (ON lighting)	Output ON/OFF:red color LED Vacuum generation valve ON/ OFF:green color LED
Display/set resolution		kPa	0.1	1
Protection	Reverse-current protection		With	
	Overvoltage protection		With	
	Output short circuit protection		With	
	IP class		IP40	
Vibration resistance			10~55Hz, total amplitude 1.5mm, 50m/s² 2 hours each direction of XYZ	
Shock resistance		m/s^2	980, 3 times each direction of XYZ	100, 3 times each direction of XYZ
Electrical connection			Connector	
Cable			5 lead wires, 24AWG, UL AWM 20276, 1000mm Note1	
Connector			Maker:JST model :GHR-05V-S	

Note1)The white wire in cable of MPS-9 is not connected.

Weight (g)

Specifications						
Single unit	Vacuum generation valve type	Filter	Sensor	Sealing valve/ check valve C	D	E
Single	Normally opened/ Normally closed	With	N/A	227	224	227
			With MPS-V9	247	244	247
			With MPS-10	249	246	249
		N/A	N/A	189	186	189
			With MPS-V9	209	206	209
			With MPS-10	211	208	211
	Self-holding	With	N/A	230	227	230
			With MPS-V9	250	247	250
			With MPS-10	252	249	252
		N/A	N/A	192	189	192
			With MPS-V9	212	209	212
			With MPS-10	214	211	214
Single for manifold	Normally opened/ Normally closed	With	N/A	235	-	235
			With MPS-V9	255	-	255
			With MPS-10	257	-	257
		N/A	N/A	197	-	197
			With MPS-V9	217	-	217
			With MPS-10	219	-	219
	Self-holding	With	N/A	238	-	238
			With MPS-V9	258	-	258
			With MPS-10	260	-	260
		N/A	N/A	200	-	200
			With MPS-V9	220	-	220
			With MPS-10	222	-	222

・Manifold Base

Stations	1～5stations
Weight	150

Calculation of Weight for Manifold Type

Single unit for manifold weight×No. of stations+manifold base

Example 1) 5 stations manifold with self-holding valve, MPS-9 sensor, filter, and sealing valve and check valve
258×5+150= 1,440g

Example 2) 4 stations manifold with normally closed valve, without sensor, with filter, check valve, and without sealing valve
235×4+150= 1,090g

Performance Charts

10S

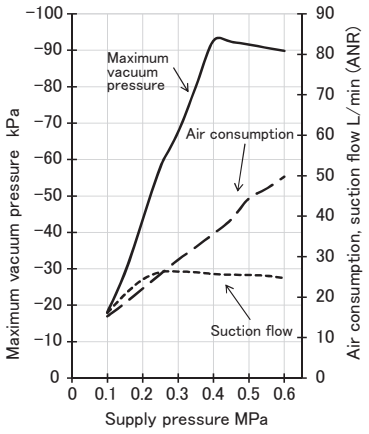

10L

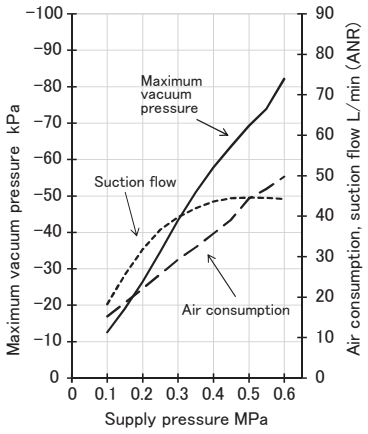

10R

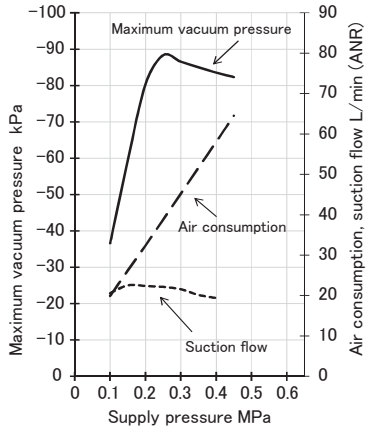

13S

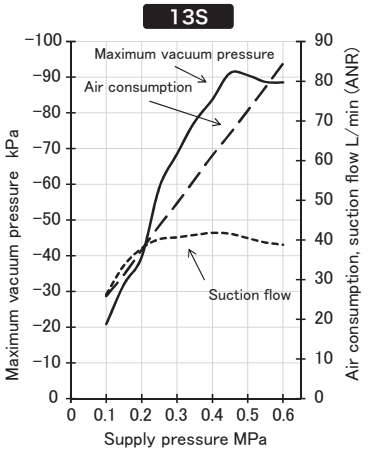

13L

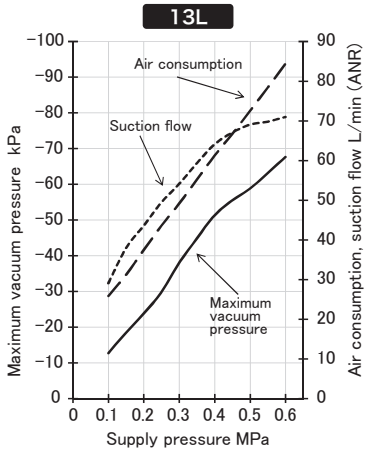

13R

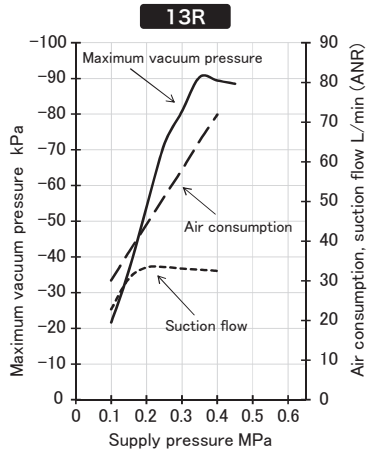

15S

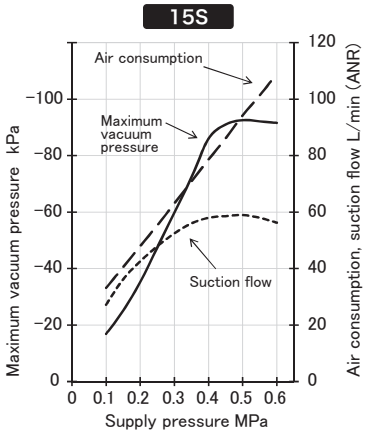

15L

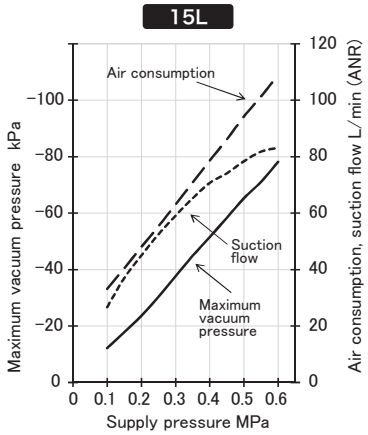

15R

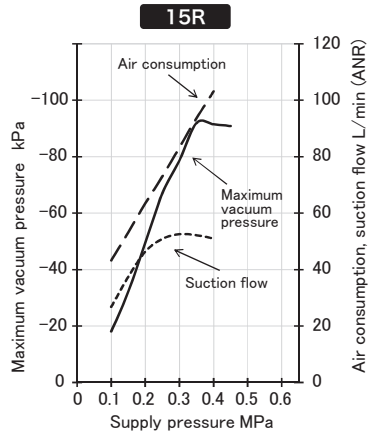

07X

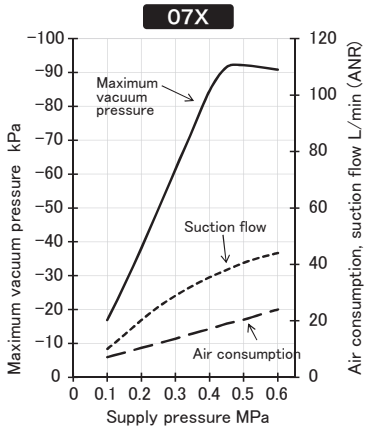

10X

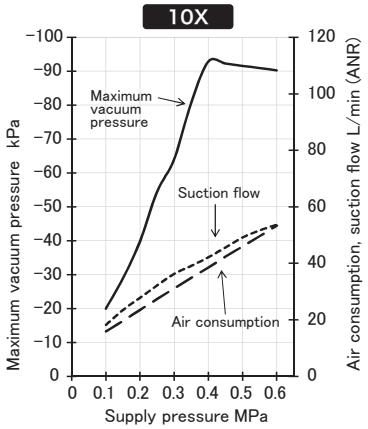

15X

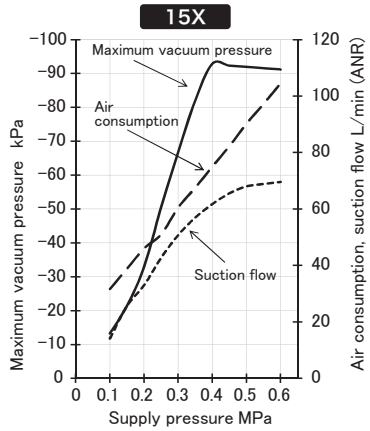

Suction Flow / Vacuum Pressure Characteristics (silencer exhaust)

10S

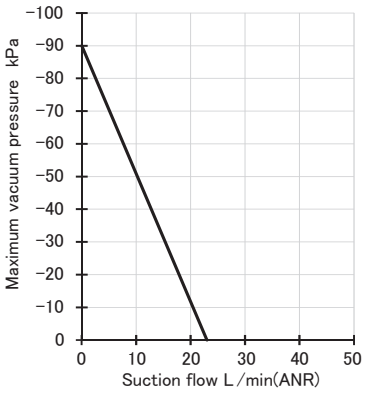

10L

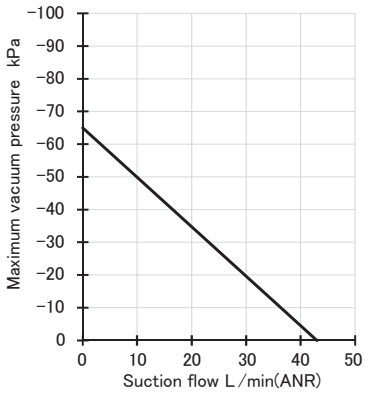

10R

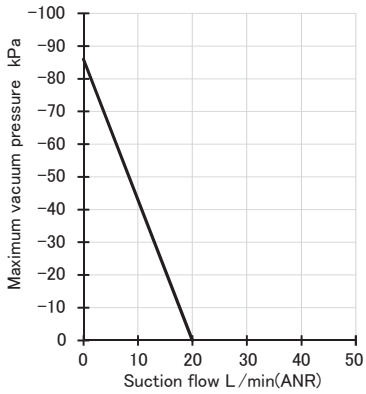

13S

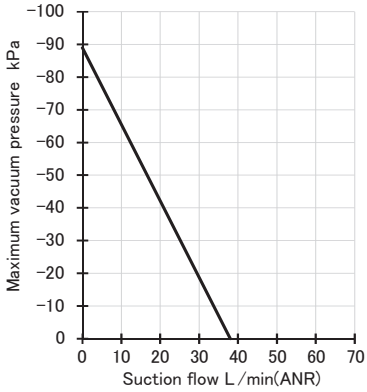

13L

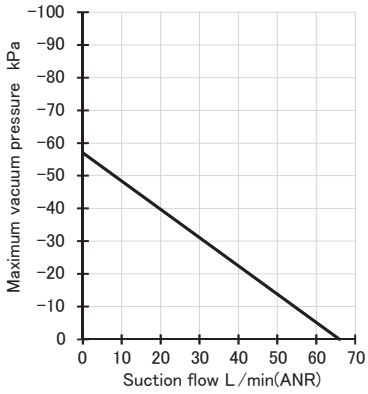

13R

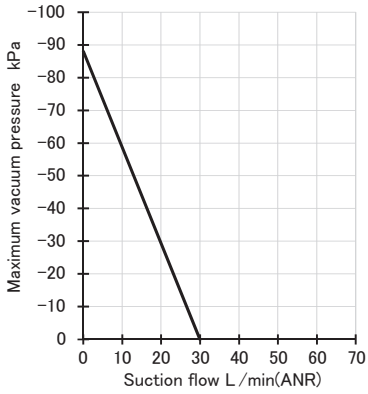

15S

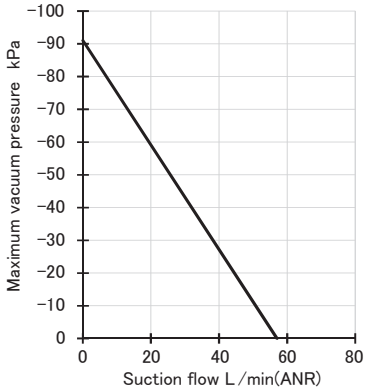

15L

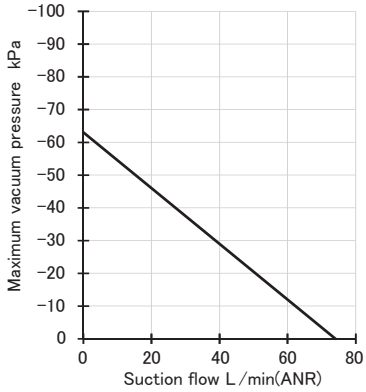

15R

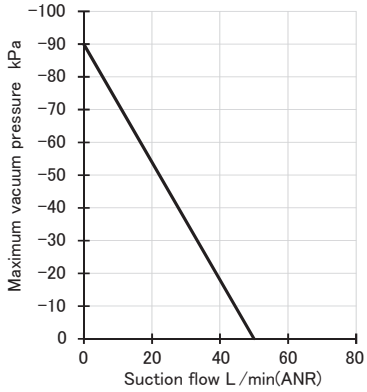

07X

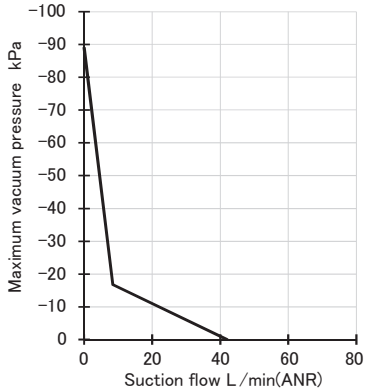

10X

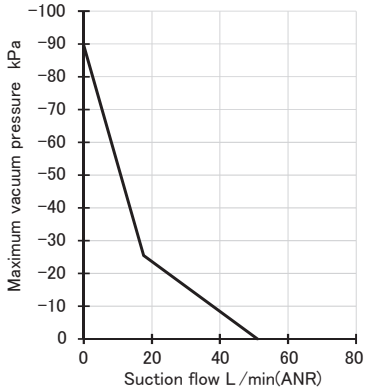

15X

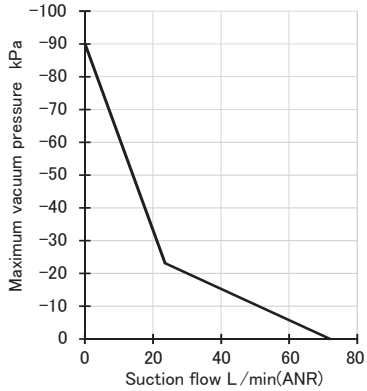

Dimensions

(mm)

Single Unit/Silencer Exhaust
(with sensor, filter)

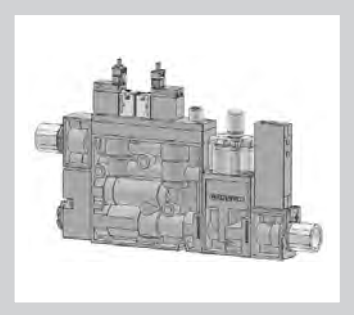

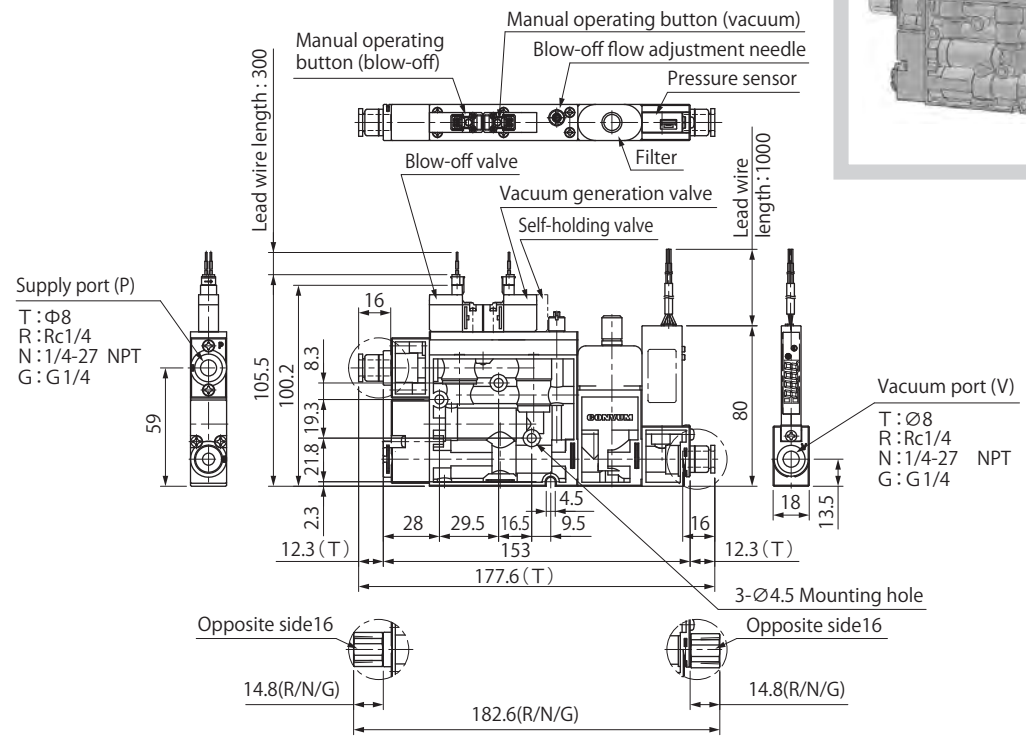

Single Unit/Silencer Exhaust
(without sensor, with filter)

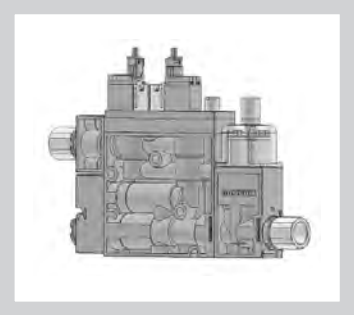

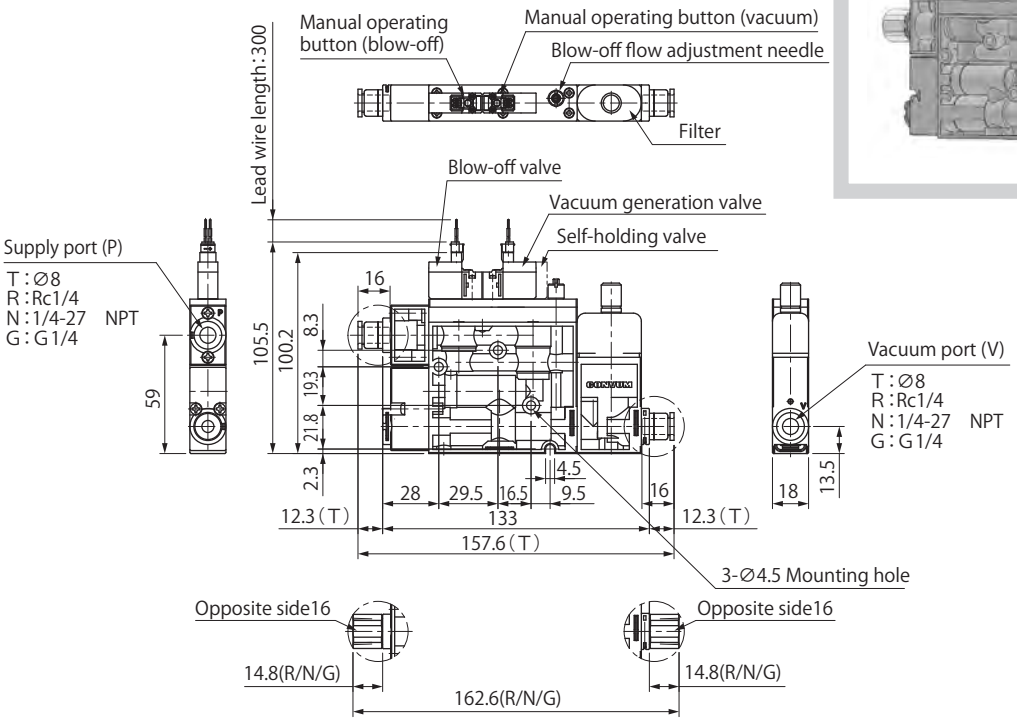

Dimensions

(mm)

Single Unit/Silencer Exhaust)
(with sensor, without filter)

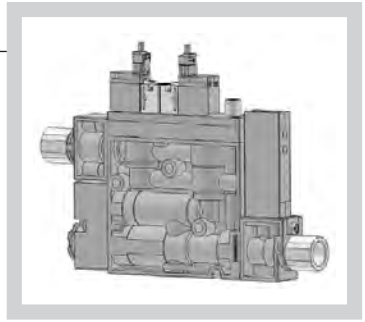

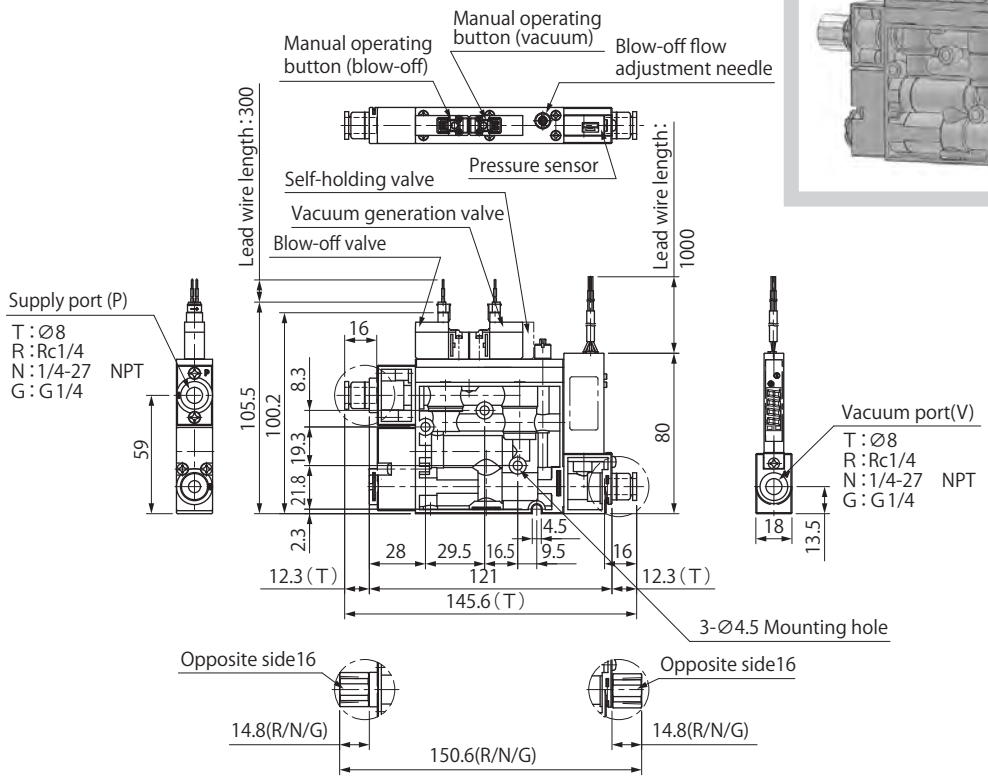

Single Unit/Silencer Exhaust)
(without sensor, filter)

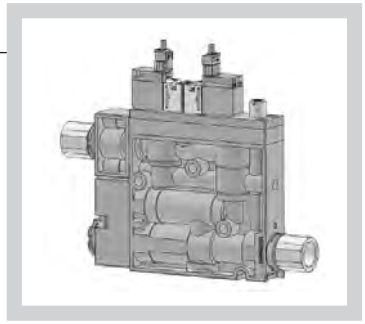

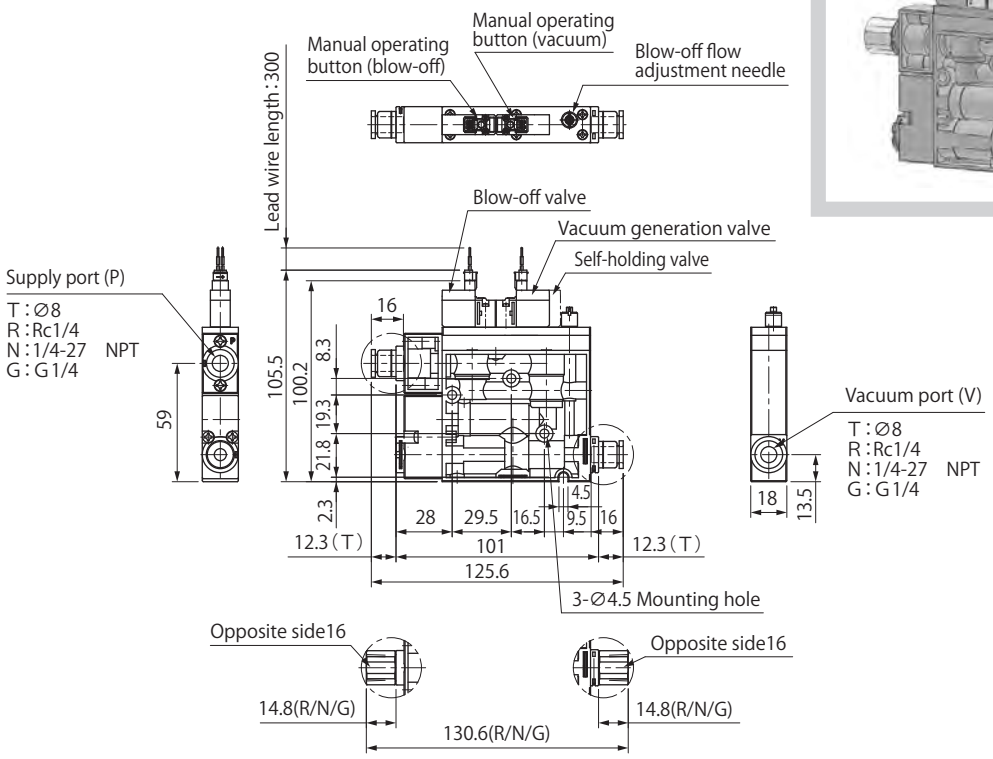

Dimensions

(mm)

Single Unit/Individual Exhaust
(with sensor, filter)

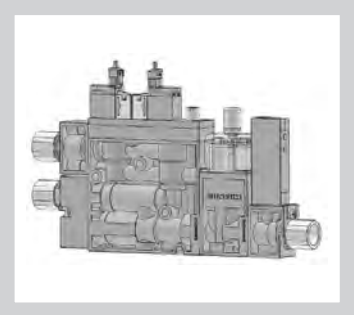

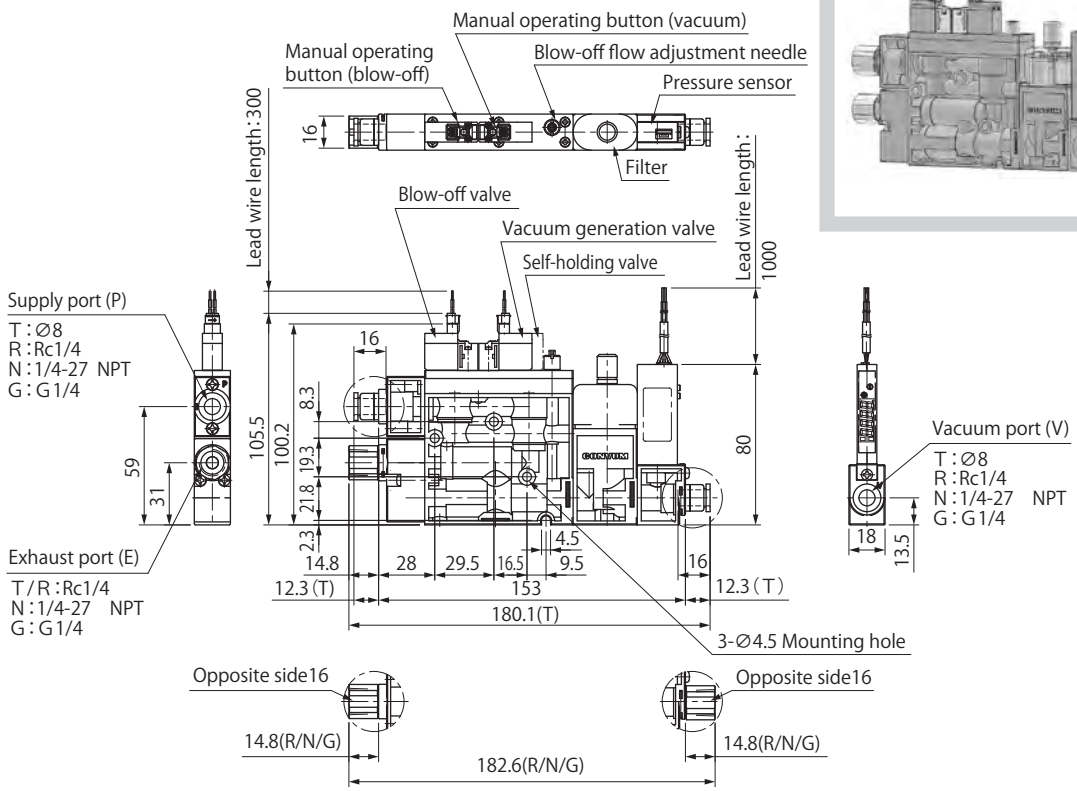

Single Unit/Individual Exhaust
(without sensor, with filter)

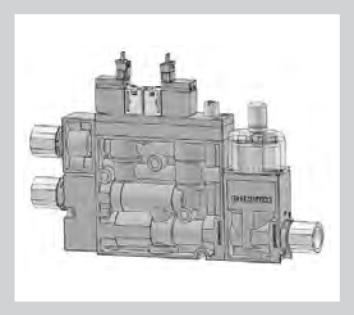

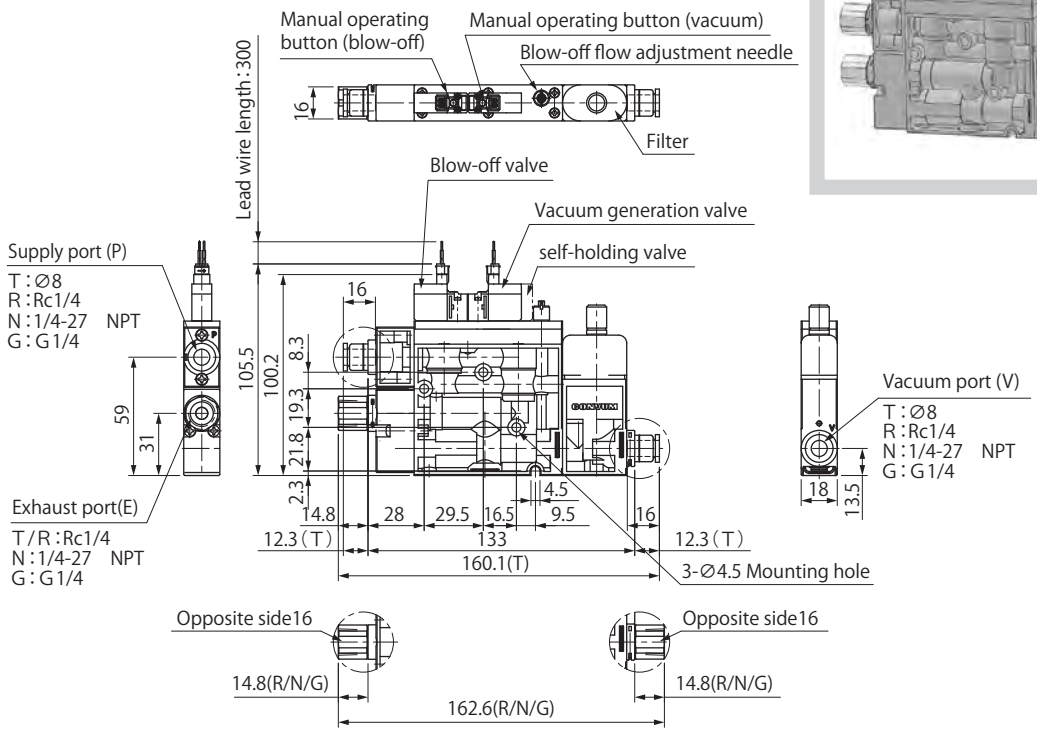

Dimensions

(mm)

Single Unit/Individual Exhaust
(with sensor, without filter)

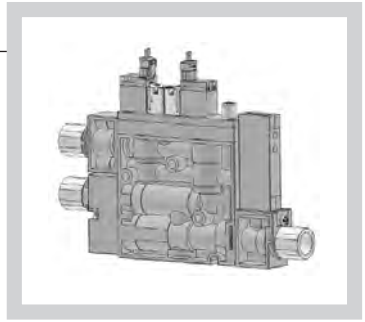

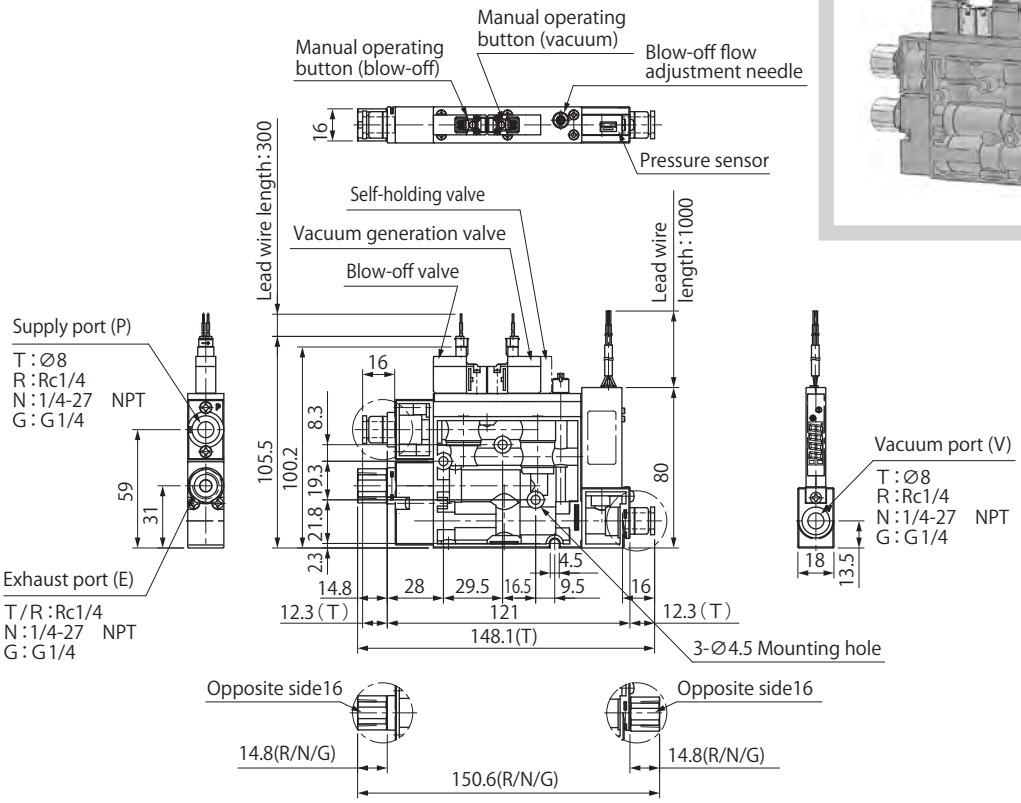

Single Unit/Individual Exhaust
(without sensor, filter)

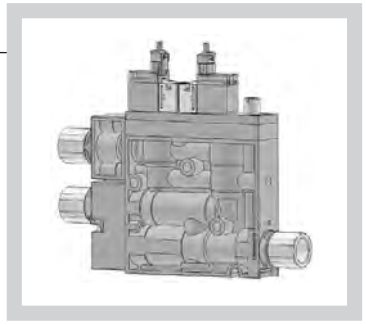

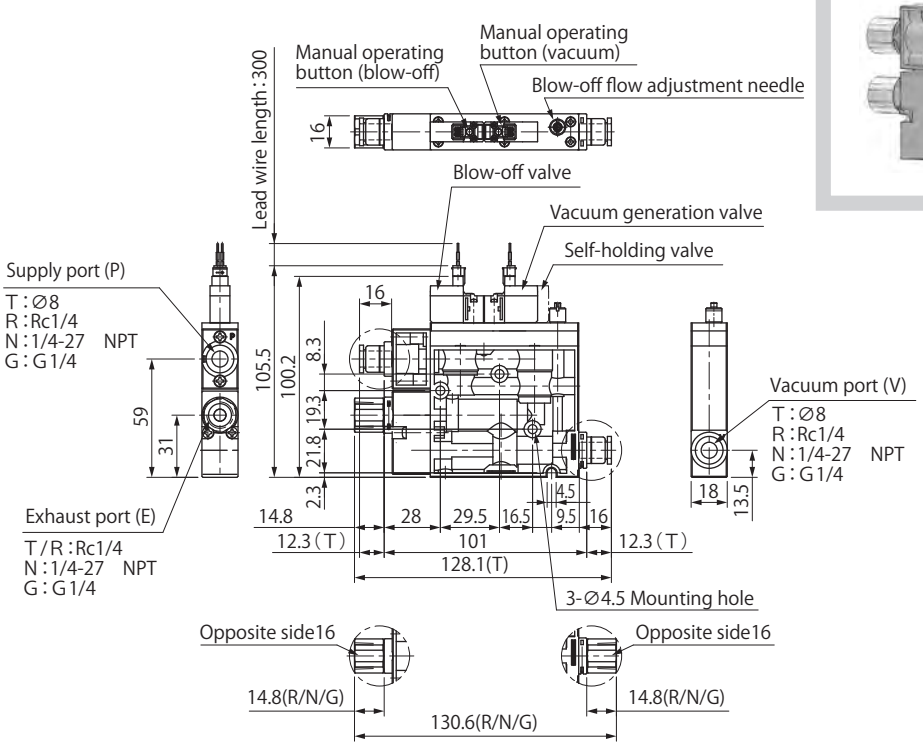

Dimensions

(mm)

Manifold Unit
(With sensor, filter)

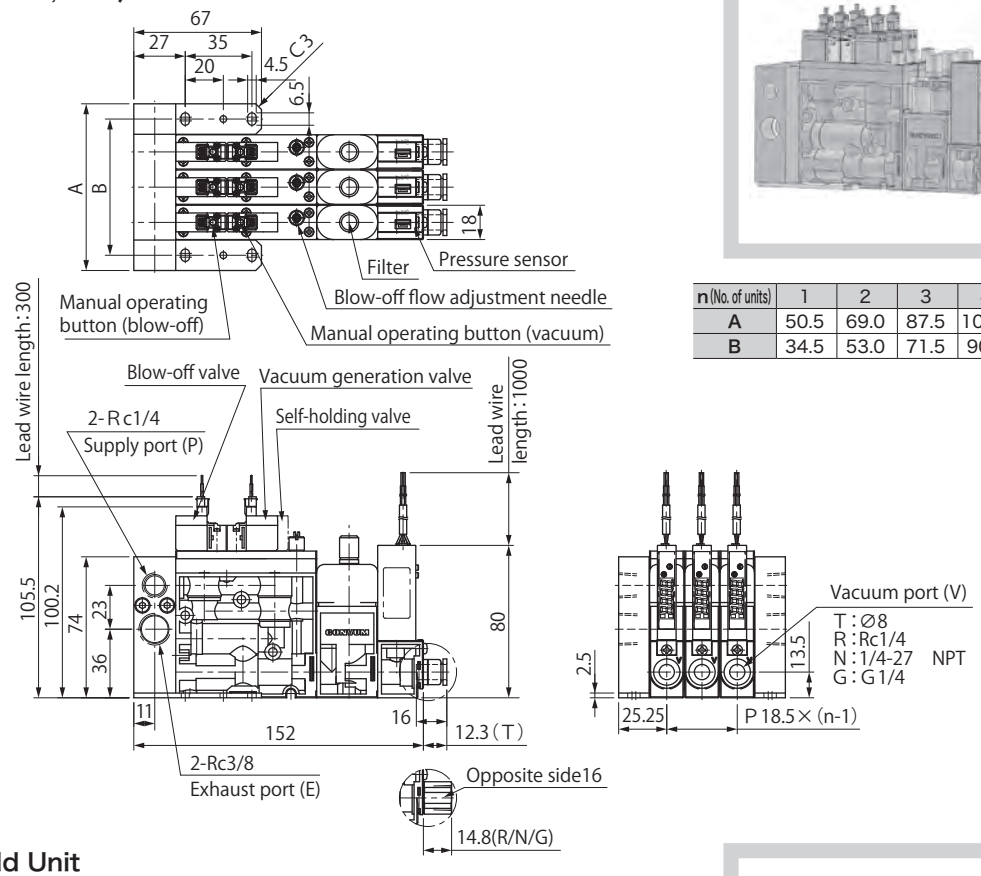

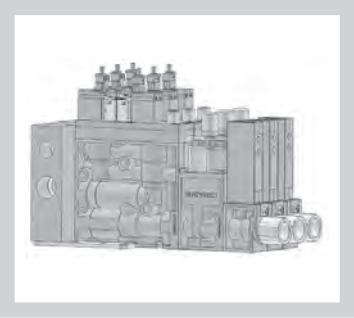

n (No. of units)	1	2	3	4	5
A	50.5	69.0	87.5	106.0	124.5
B	34.5	53.0	71.5	90.0	108.5

Manifold Unit
(without sensor, with filter)

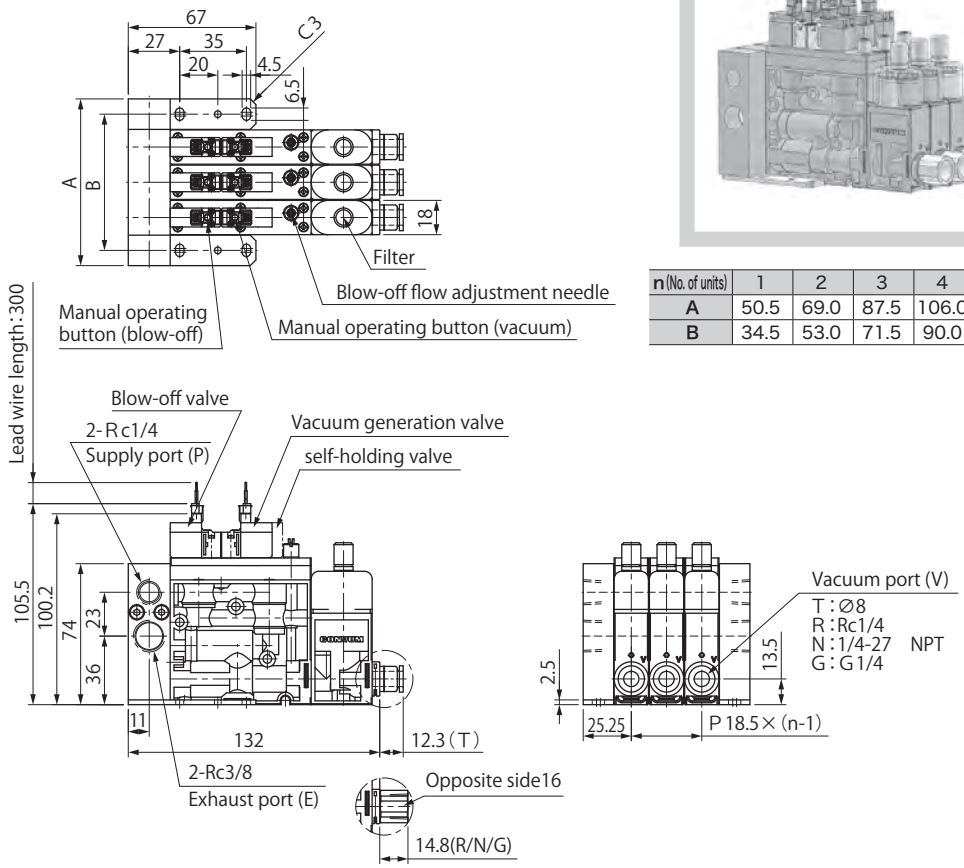

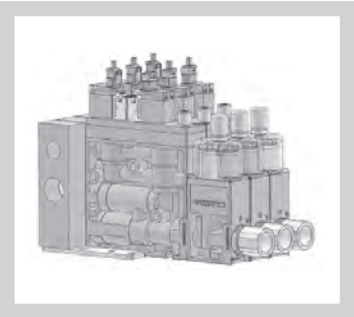

n (No. of units)	1	2	3	4	5
A	50.5	69.0	87.5	106.0	124.5
B	34.5	53.0	71.5	90.0	108.5

Dimensions

(mm)

Manifold Unit
(with sensor, without filter)

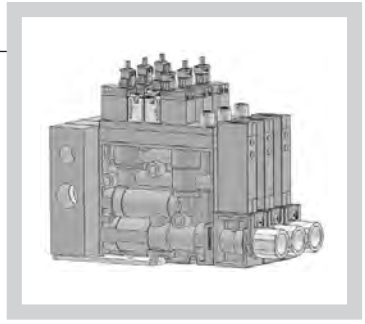

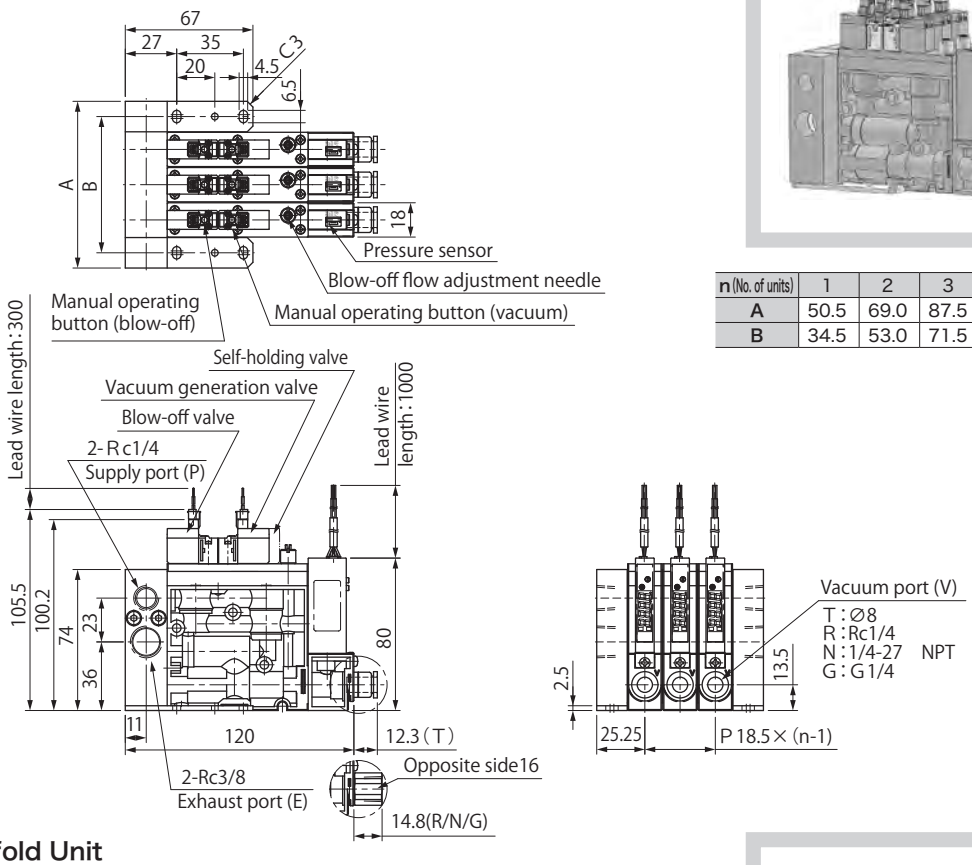

n (No. of units)	1	2	3	4	5
A	50.5	69.0	87.5	106.0	124.5
B	34.5	53.0	71.5	90.0	108.5

Manifold Unit
(without sensor, filter)

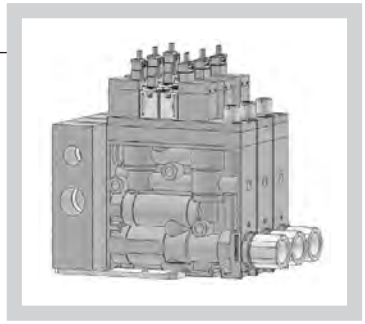

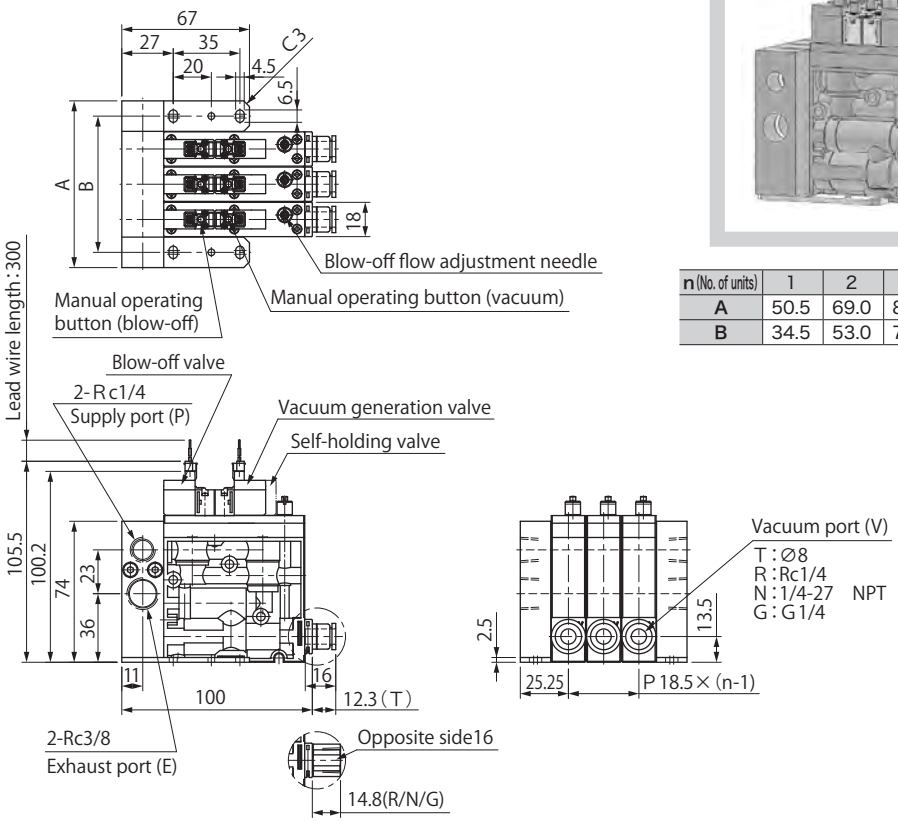

n (No. of units)	1	2	3	4	5
A	50.5	69.0	87.5	106.0	124.5
B	34.5	53.0	71.5	90.0	108.5

MC22 Series

20mm Width CONVUM

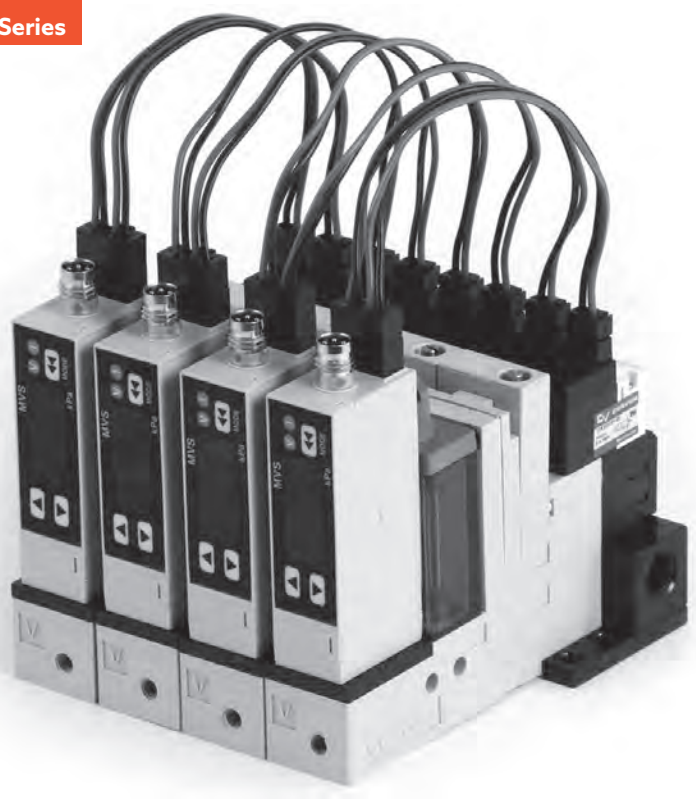

RoHS

All-in-One Unit

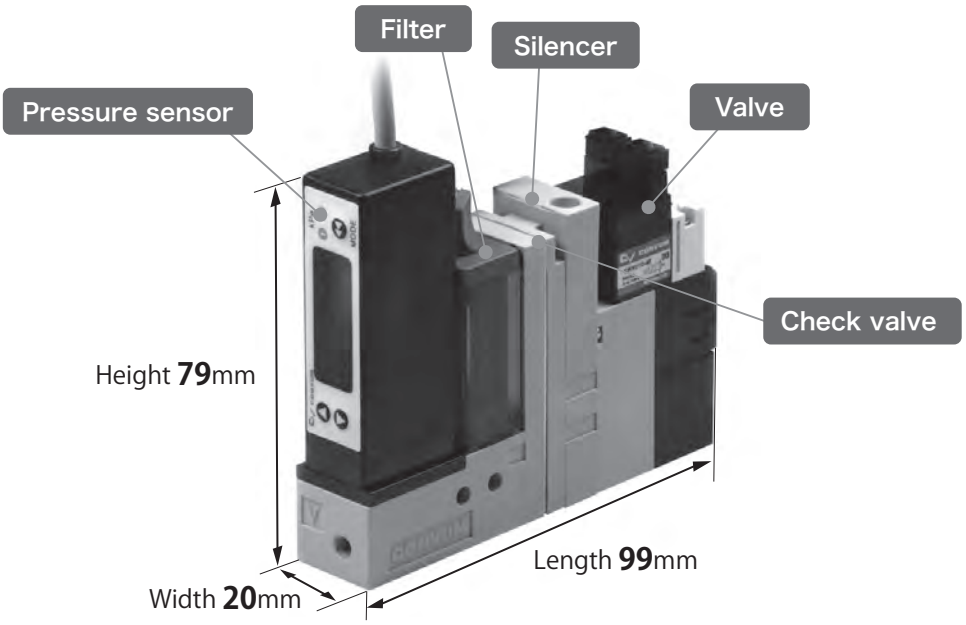

※ MPS-V23 sensor/ check valve mounted

Flexible combinations are selectable

○ Can select with sensor, digital display, filter or not.

Holding workpiece at an emergency stop

- By mounting self-holding valve, it is possible to keep vacuum. It prevents the workpiece from falling.

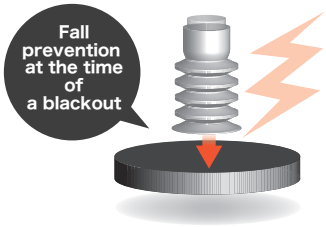

Air consumption will be reduced

- When using the energy-saving sensor (with solenoid valve control function)

98% of air consumption **reduced !**

※According to our measurement condition

Detail of the sensor ••→ P.573

Energy-saving function: Before	Energy-saving function: After
Air consumption of MC22S10HS 48L/min	
Vacuum generation from 0 kPa to -87kPa	
Vacuum ejector staying ON during work pieces adsorption.	Upon reaching -87kPa, the check valve keeps vacuum pressure retained and ejector will be turned off.
Vacuum generation time: 5 sec/1 tact	Vacuum generation time: 0.1 sec/1 tact (Setting vacuum pressure arrival time)
Air consumption in 1 tact time 4L/min 48L × (5/60sec)=4L/min	Air consumption in 1 tact time 0.08L/min 48L × (0.1/60sec)=0.08L/min
Air consumption 98% reduced: from 4L/min to 0.08ℓ/min	

【Condition】CONVUM:MC22S10HS type Supply pressure:0.5MPa
Air consumption:48L/min Tube:φ4×2.5 length 800mm

Low noise

- **58dB(A)** with the special structure of silencer

※ With nozzle type 05HS, according to our measurement condition

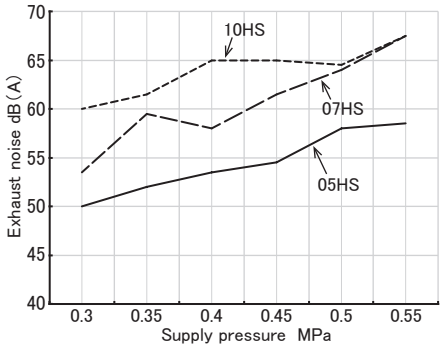

Can be mounted on manifold, up to 8 units

- Manifold make it possible to supply air intensively
- Differ specifications MC22 can be putted together according to various purposes

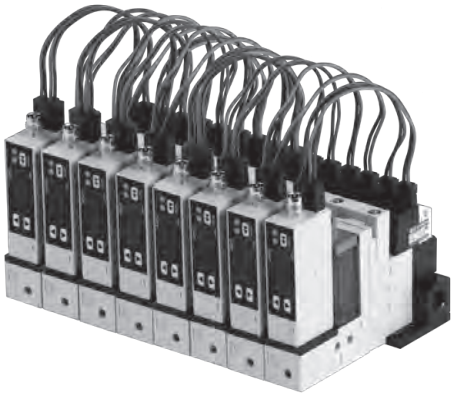

MC22 20mm Width CONVUM

How to Order

In case of manifold

MC22	M	05	H	S	ABS	LC	4	B	L	R	3	1	2	L
	①	②	③	④	⑤	⑥	⑦	⑧	⑨	⑩	⑪	⑫	⑬	⑭

① Body Type

S	Single unit
M	Manifold unit

② Nozzle Type

Symbol	Nozzle size [mm]
05	0.5
07	0.7
10	1.0

③ Maximum Vacuum Pressure [kPa]

Symbol	Type	Vacuum pressure
H	High vacuum type	-87
L	High flow type	-53

⑤ Pressure Sensor

Symbol	Sensor type	Pressure range [kPa]	Display	Switch output	Analog output	Input specifications
ABS	MVS-030AB	-101～0	LED	NPN 1output	N/A	N/A
VG	MPS-V23	-101～0	Digital	NPN 2 outputs	DC1～5V	N/A
21	MVS-201 Note1,2	-101～500	Digital	NPN 1 output	N/A	Sink
Z	Without sensor					

Note1)Energy-saving pressure sensor (solenoid valve control function mode).
Note2)Please select check valve (select LC in ⑥) in case of using energy-saving function.
※ Please consult with us for PNP output type.

⑥ Check Valve

Symbol	Check valve
L	N/A
LC	With

⑩ Port Size

R	Rc1/8
N	NPT1/8★
G	G1/8★

⑪ Manifold Base

Symbol	No. of stations	Symbol	No. of stations
1	1station★	5	5 stations
2	2 stations	6	6 stations★
3	3 stations	7	7 stations★
4	4 stations	8	8 stations★

★are made to order

⑫ No. of Block Plates

Symbol	No. of block plates	Symbol	No. of block plates
0	N/A	4	4 pieces
1	1 piece	5	5 pieces★
2	2 pieces	6	6 pieces★
3	3 pieces	7	7 pieces★

Recommend! These model number below satisfy general needs and functions with product advantages. ※Please feel free to contact us.

Product code	Model number	Specifications			
		Nozzle size(mm)	Pressure sensor	Check valve	Vacuum generation valve type
202800047	MC22S07HSZL4BLR	0.7	N/A	N/A	Normally closed
202800355	MC22S07HSABSLC4BLR	0.7	Electronic pressure sensor	With	Normally closed
202800209	MC22S07HSVGLC4BLR	0.7	Digital	With	Normally closed
202800004	MC22S07HS21LC4BLR	0.7	Digital, energy-saving	With	Normally closed
202800032	MC22S10HSZL4BLR	1.0	N/A	N/A	Normally closed
202800261	MC22S10HSABSLC4BLR	1.0	Electronic pressure sensor	With	Normally closed
202800029	MC22S10HSVGLC4BLR	1.0	Digital	With	Normally closed
202800006	MC22S10HS21LC4BLR	1.0	Digital, energy-saving	With	Normally closed

④ Rated Pressure [MPa]

S	0.5
R	0.35

※ ②③④ Applicable Models

②	③	④ S	④ R
05	H	○	○
	L	○	×
07	H	○	○
	L	○	×
10	H	○	○
	L	×	×

※ Specifications by Nozzle

Nozzle type	Rated pressure [MPa]	Maximum vacuum pressure [kPa]	Suction flow [L/min(ANR)]	Air consumption [L/min(ANR)]
05HS	0.5	-87	6	10
05LS		-53	11	
05HR	0.35	-87	4	
07HS	0.5		11	22.5
07LS		-53	21	
07HR	0.35	-87	9	
10HS	0.5		20	48
10HR	0.35		15	

⑦ Valve Voltage

Symbol	Voltage
4	DC24V

⑧ Vacuum Generation Valve Type

A	Normally opened
B	Normally closed
W	Self-holding Note1

Note1) The energy-saving function for the sensor doesn't work if the self-holding valve is selected.

⑨ Valve Connection

L	Lead wire with connector

⑬ No. of CONVUM

Symbol	No. of CONVUM	Symbol	No. of CONVUM
1	1unit ★	5	5 units
2	2 units	6	6 units ★
3	3 units	7	7 units ★
4	4 units	8	8 units ★

⑭ Position of CONVUM

Blank	Figure of ⑪ and ⑬ are same
R	Placed to the right
L	Placed to the left

※Please turn the vacuum port towards your side, the CONVUM you faced cloud be either left or right upon chosen.

Imagine of manifold selection

Number of ⑪ = number of ⑫ + number of ⑬

MC22M##4BLR505

Manifold base: 5 stations, CONVUM: 5 units

⑬CONVUM 5 units

Vacuum port

⑪Manifold base (for 5 stations)

MC22M##4BLR523L

Manifold base: 5 stations, CONVUM: 3 units, block plate: 2 pieces

⑬CONVUM 3 units

⑫Block plate (2 pieces)

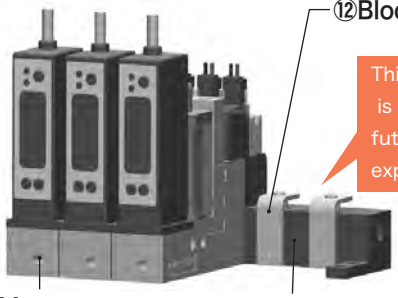

This kind of selection is also available for future system expansion.

Vacuum port

⑪Manifold base (for 5 stations)

Turn the vacuum port towards your side, placed the CONVUM to the left (L type for ⑭)

Maintenance Parts

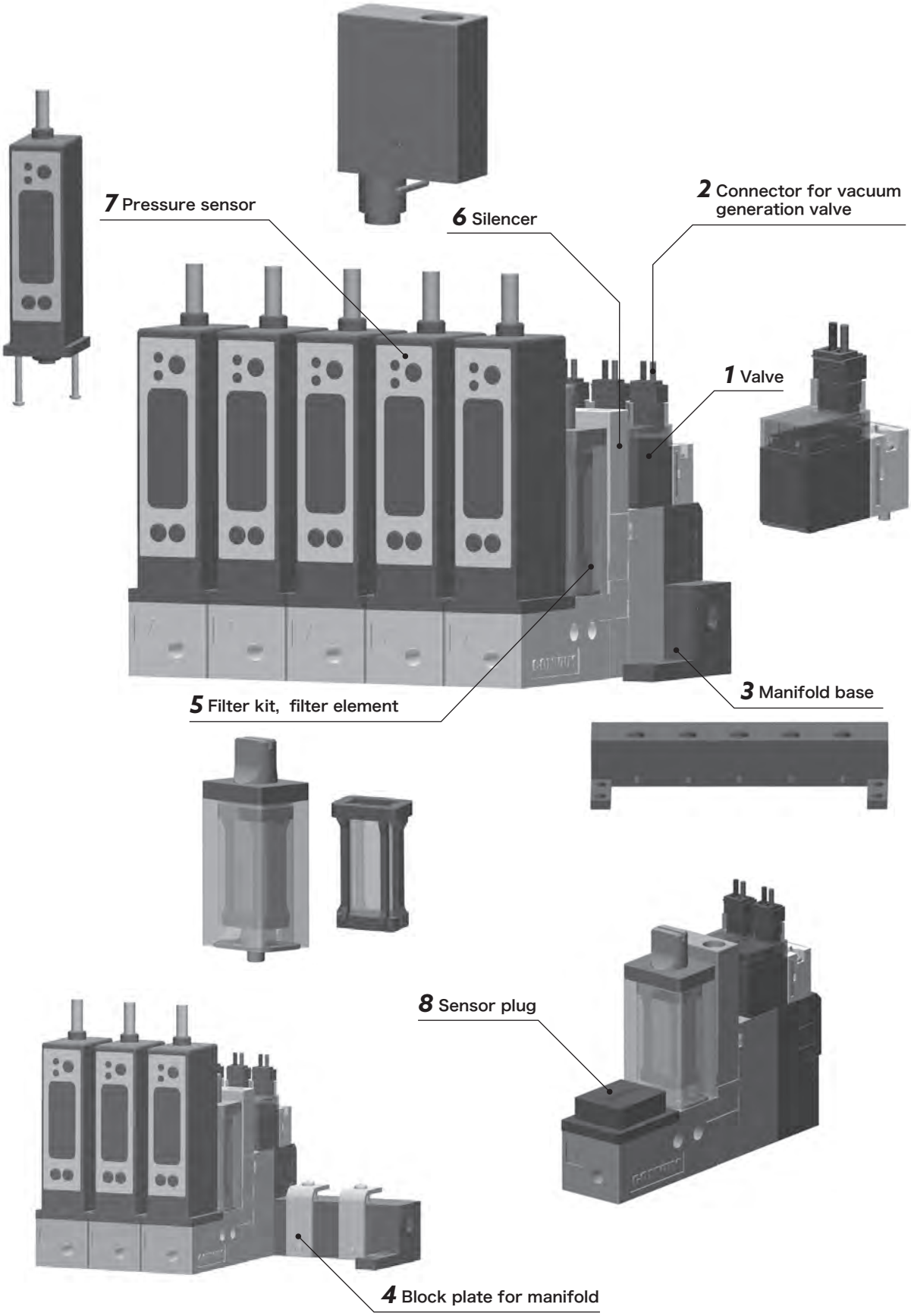

1 Valve

CKV010-4E
Common for vacuum generation and blow-off
※ Lead wire length 300mm
※ Gasket and mounting screw are included

LV290-4E
Self-holding type
※ Lead wire length 300mm
※ Gasket and mounting screw are included

UV280-4E
For vacuum generation of normally opened
※ Lead wire length 300mm
※ Gasket and mounting screw are included

2 Connector for Vacuum Generation Valve
※With lead wire

CA 2 — V4 — 6

Applicable valve

2	CKV010-4E, UV280-4E
3	LV290-4E

Lead wire length (mm)

Blank	300
6	600
10	1000
20	2000 Note1
30	3000 Note2

Note1, 2) CKV010-4E, UV280-4E only.

3 Manifold Base

MC2 — M 1 R

No. of stations

1	1 station	5	5 stations
2	2 stations	6	6 stations
3	3 stations	7	7 stations
4	4 stations	8	8 stations

Air supply port

R	Rc1/8
N	1/8-27NPT
G	G1/8

4 Block Plate for Manifold
※Mounting screws are included

MC2 — MM

※For preventing air leak when reduce the body number of the manifold.

5 Filter kit, Filter Element

MC2 — F

Symbol	Specifications
F	Filter kit (with element and gasket)
E	Only element

MC2 - F

MC2 - E

6 Silencer
※Mounting bracket is included

MC2 — S

7 Pressure Sensor
※O-ring and mounting screw are included

Model number	Specifications
MVS-030AB-MC22	Electronic, LED display
MPS-V23C-NGA-MC22	Digital display
MVS-201-MC22-A	Energy-saving, digital display (normally opened)
MVS-201-MC22-B	Energy-saving, digital display (normally closed)
MVS-201-MC22-W	Wire-saving, digital display (self-holding)

8 Sensor Plug

MC2 — Z

※For preventing the air leak when the sensor is removed from the body.

9 Connector Cable for MVS-201 Sensor and Valve

MC22 — C201 — W

Blank	Normally opened, normally closed
W	Self-holding

10 Mounting Bracket for Single Unit
※Mounting screws are included

MC2 — B

Construction

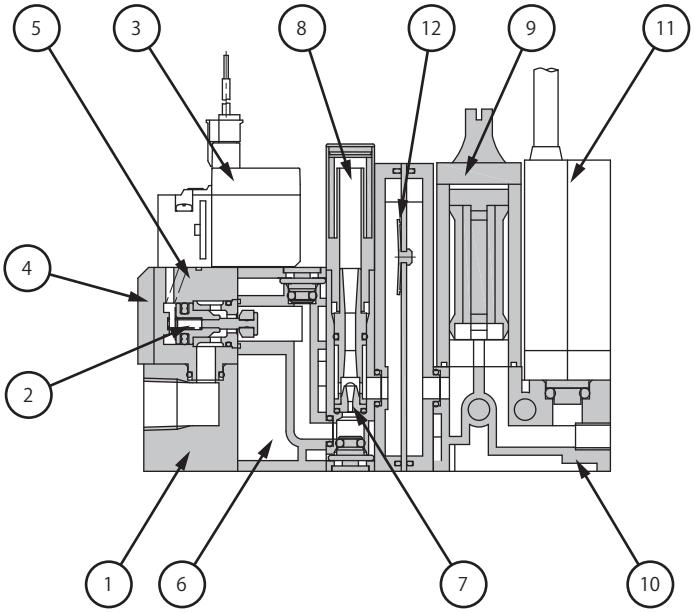

Component Parts

No.	Parts name	Material
1	Air supply base	Aluminum
2	Poppet valve	Aluminum, SUS, FKM, NBR
3	Pilot valve	-
4	Cover	Aluminum
5	Valve block	PA, NBR
6	Spacer block	PA, NBR
7	Nozzle kit	Aluminum, NBR
8	Silencer	SUS, PA, PVF
9	Filter Ass'y	-
10	Vacuum port base	PA, Aluminum, NBR
11	Pressure sensor	-
12	Check valve	PA, Aluminum, NBR

Symbol

Normally Opened

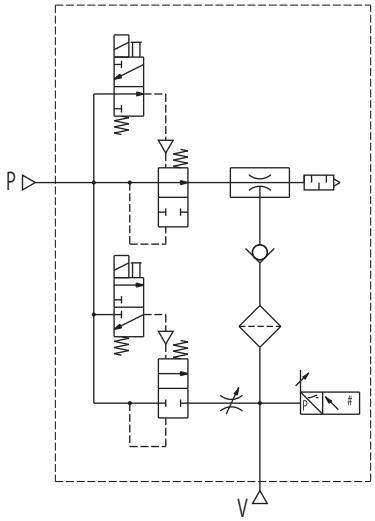

Normally Closed

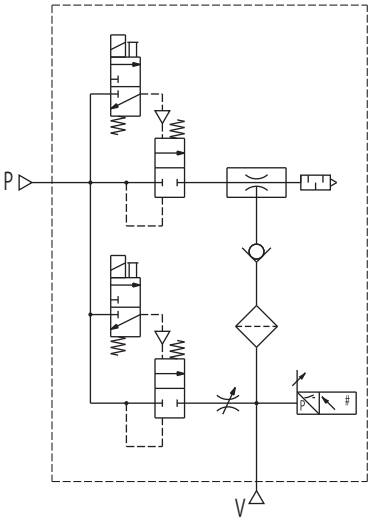

Self-holding

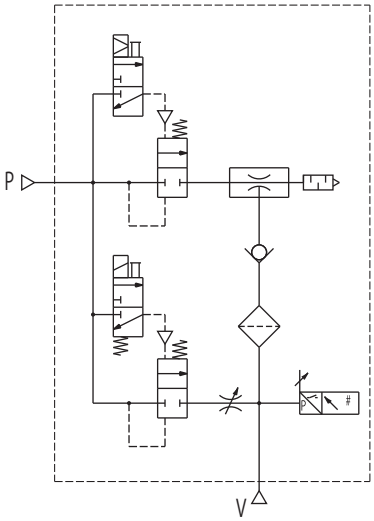

CONVUM Specifications

Description ＼ Model number	Unit	MC22 □ 05			MC22 □ 07			MC22 □ 10	
		HS	LS	HR	HS	LS	HR	HS	HR
Nozzle size	mm	0.5			0.7			1.0	
Fluid		Non-lubricated compressed air							
Ambient temperature	℃	0～50 (No Freezing)							
Operating pressure range	MPa	0.2～0.5							
Vacuum generation valve type		Normally opened (A) /normally closed (B)/self-holding (W)							
Filter element filtration	μm	37							
Filter filtration area	mm^2	484							
Rated pressure	MPa	0.5		0.35	0.5		0.35	0.5	0.35
Maximum vacuum pressure	kPa	-87	-53	-87		-53	-87		
Suction flow	L/min(ANR)	6	11	4	11	21	9	20	15
Blow-off flow	L/min(ANR)	50							
Air consumption	L/min(ANR)	10			22.5			48	

Valve Specifications

Description ＼ Model number		Unit	CKV010-4E	LV290-4E	UV280-4E
Valve structures			3 port, direct operated poppet valve		
Rated voltage		V	DC24		
Allowable voltage fluctuation		%	±10		
Power consumption (current value)	Vacuum generation	W(mA)	1 (42)	1.3(54)	1(42)
	Vacuum suspension			1.5(63)	
Minimum energization time		ms	-	30	-
Insulation type			Class B		
Manual override operation			Non-lock	N/A	Non-lock
Display/surge killer			LED/diode		
Lead wire			Lead wire with connector(300mm)		
Weight (with lead wire)		g	15.3	19.5	14.1

Weight (g)

Specifications				
Single unit	Vacuum generation valve type	Sensor	Check valve With	Check valve Without
Single	Normally opened/ Normally closed	N/A	96	80
		With MVS-AB	110	94
		With MPS-V23	119	103
		With MVS-201	119	103
	Self-holding	N/A	99	83
		With MVS-AB	113	97
		With MPS-V23	122	106
		With MVS-201	122	106
Single for manifold	Normally opened/ Normally closed	N/A	81	65
		With MVS-AB	94	78
		With MPS-V23	103	87
		With MVS-201	103	87
	Self-holding	N/A	84	68
		With MVS-AB	97	81
		With MPS-V23	106	90
		With MVS-201	106	90

・Manifold Base

No. of station	1	2	3	4	5	6	7	8
Weight	26	43	60	78	95	112	129	147

Calculation of Weight for Manifold Type

Single unit for manifold weight×No. of stations+manifold base

Example 1) 5 stations manifold with self-holding valve, MPS-23 sensor and check valve
106×5+95= 625g

Example 2) 4 stations manifold with normally closed valve, without sensor and check valve
65×4+78= 338g

Pressure Sensor Specifications

Description ＼ Model number		Unit	MVS-030AB-MC22	MPS-V23C-NGA-MC22	MVS-201-MC22-A/B/W
Fluid			Air (vacuum), non-corrosive gas, non-flammable gas		
Diaphragm			Silicon diaphragm		
Rated pressure range		kPa	-101～0	-101～0	-101～500
Setting pressure range		kPa	-101.2～-2.7	-101.3～10	-101～500
Withstand pressure		MPa	0.5	0.3	0.8
Ambient temperature range		℃	0～50(No freezing)		
Ambient humidity range		%RH	35～85(No condensation)		
Power supply voltage		V	DC12～24±10%, ripple(Vp-p)10% or less	DC12～24±10%, ripple(Vp-p)10% or less	DC24±10%, ripple(Vp-p) 5% or less Note1
Current consumption		mA	20	55 or less	45(not include the driven current for valve)
Switch output	Type		NPN open collector 1 output	NPN open collector 2 outputs	NPN open collector 1 output
	Maximum load current	mA	80	80	125
Analog output			-	DC1～5V(±0.1) linearity 0.5% F.S. output impedance1kΩ	-
Digital input (suction/blow off command)			-	-	Non-contact 1 input (more than 1msec)
Repeatability		%	±3F.S.	±0.2F.S. 1digit or less	±0.3F.S. 1digit or less
Temperature characteristic		%	Less than ±2F.S. (At standard temperature 25℃, range 0～50℃)		
Response time		ms	2 or less	2.5 or less	
Hysteresis			0.1～0.5kPa	Variable	
Display	Digital		-	3 1/2 digital, 7-segment, red color LED	3-digital, 7-segment, red color LED
	Operation		Red color LED (ON lighting)	OUT1:green color LED(ON lighting), OUT2:red color LED(ON lighting)	Output ON/OFF: red color LED Vacuum generation valve ON/OFF: green color LED
Protection	Reverse-current protection		With		
	Overvoltage protection		With		
	Output short circuit protection		With		
	IP class		IP40		
Vibration resistance			10～150Hz, total amplitude 1.5mm, 50m/s^2 2 hours each direction of XYZ	10～55Hz, total amplitude 1.5mm, 50m/s^2 2 hours each direction of XYZ	10～150Hz, total amplitude 1.5mm, 50m/s^2 2 hours each direction of XYZ
Shock resistance		m/s^2	980, 3 times each direction of XYZ		100, 3 times each direction of XYZ
Electrical connection			Grommet		M8 connector
Cable			ϕ4 3 lead wires X 0.15mm^2 2m	ϕ4 0.15mm^2 5 lead wires 2m	ϕ4 0.3mm^2 4 lead wires 2m

Note 1) It must be consistent with the solenoid valve drive voltage.

Performance Charts

05HS

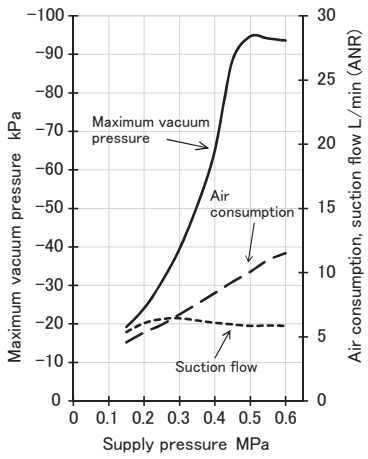

05LS

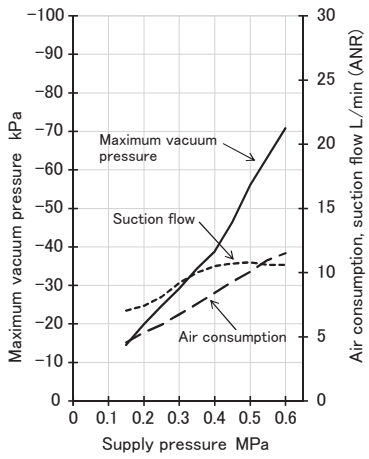

05HR

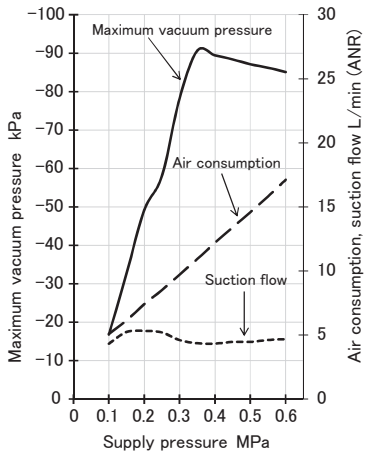

07HS

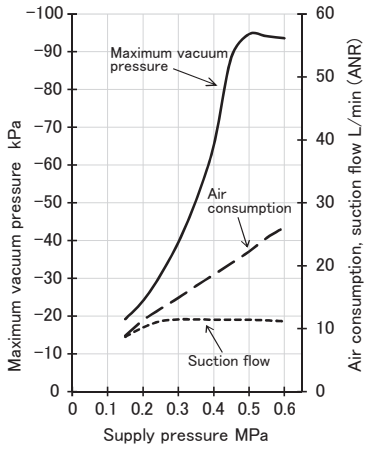

07LS

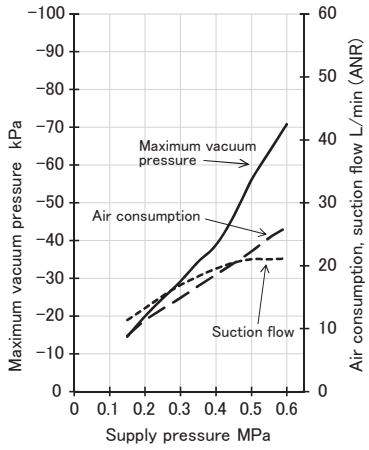

07HR

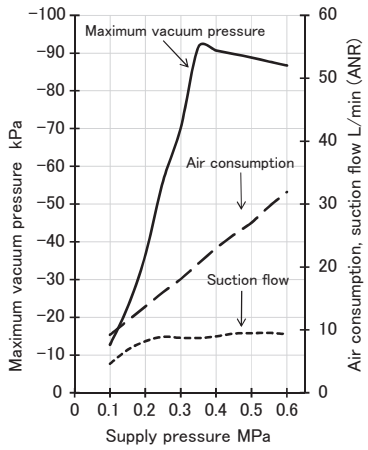

10HS

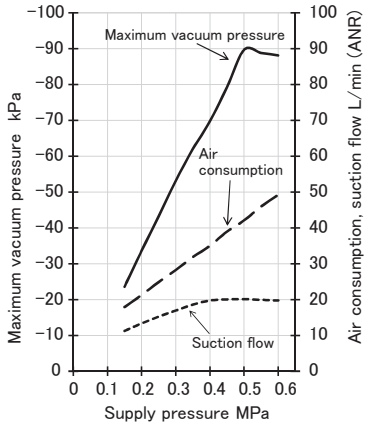

10HR

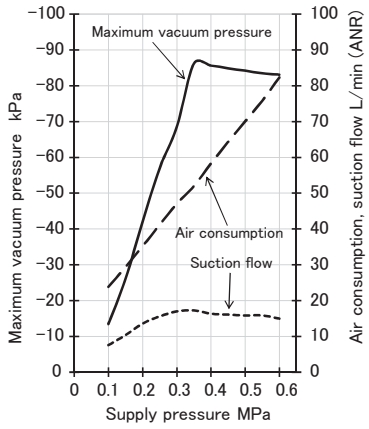

Suction Flow / Vacuum Pressure Characteristics

05HS

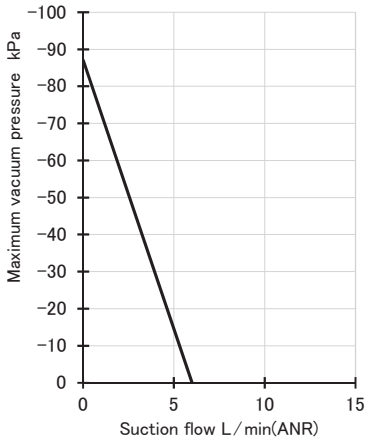

05LS

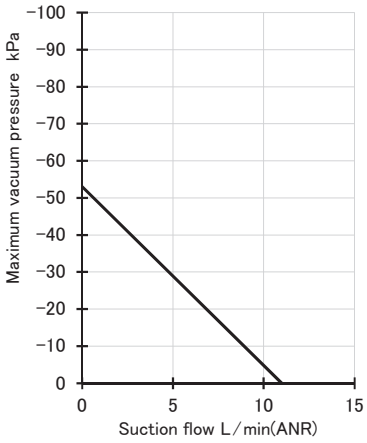

05HR

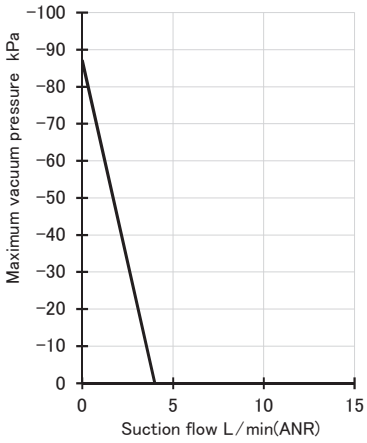

07HS

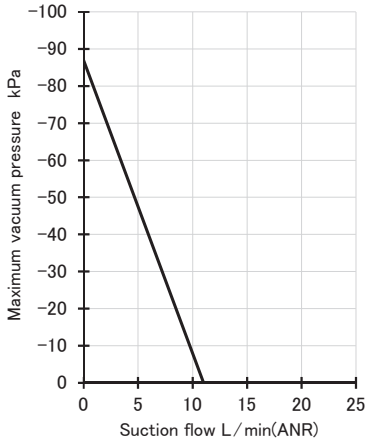

07LS

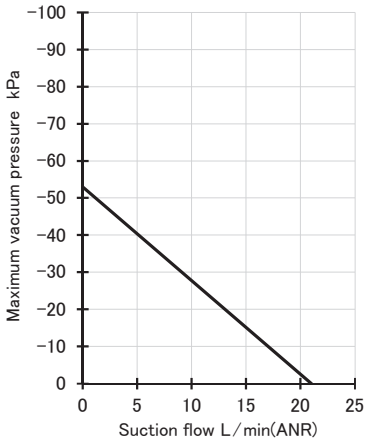

07HR

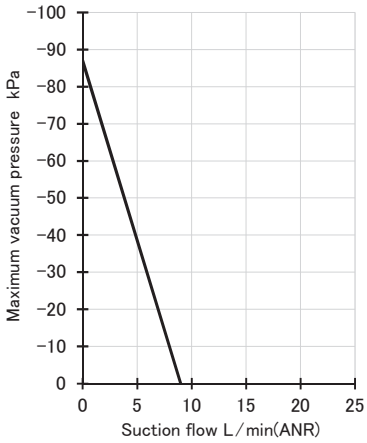

10HS

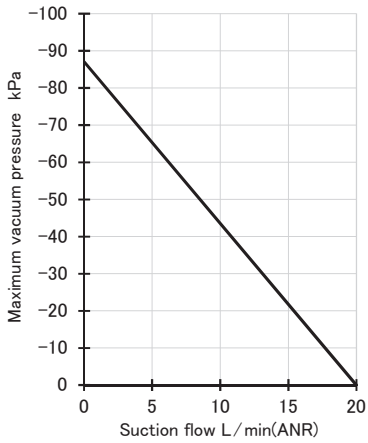

10HR

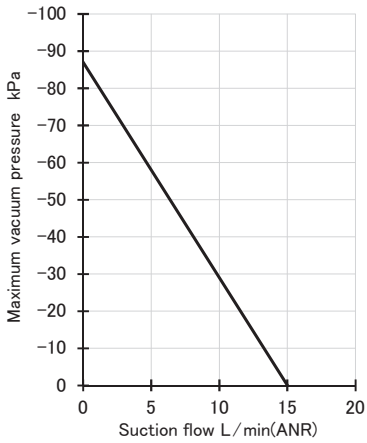

Dimensions

(mm)

Single Unit (without check valve)

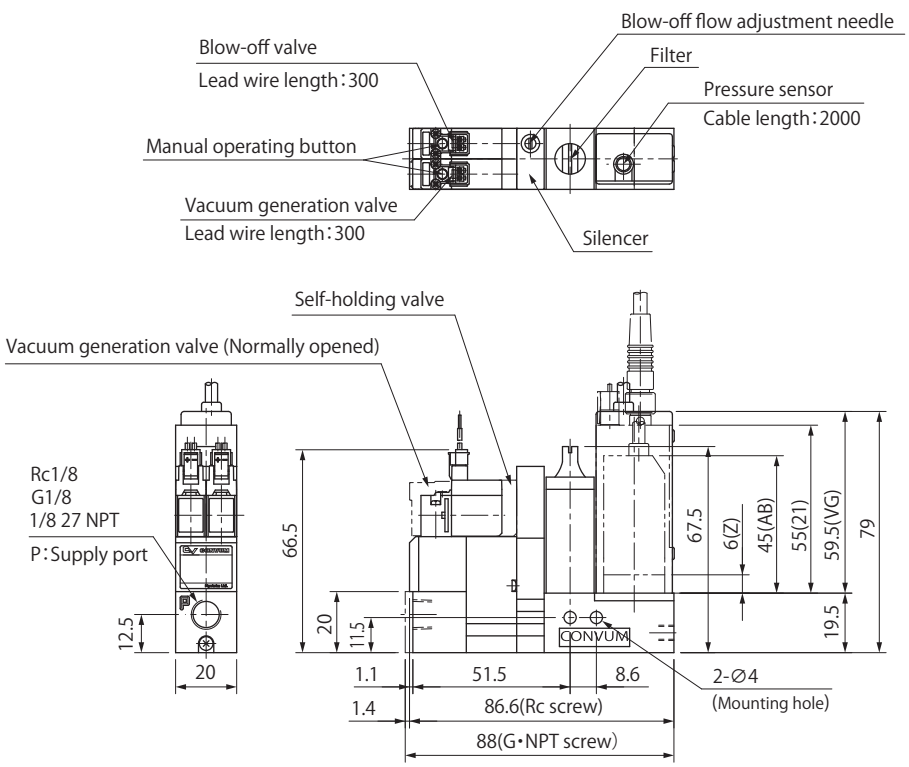

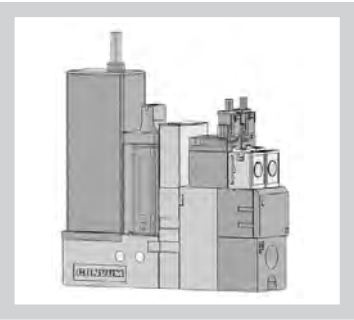

Single Unit (with check valve)

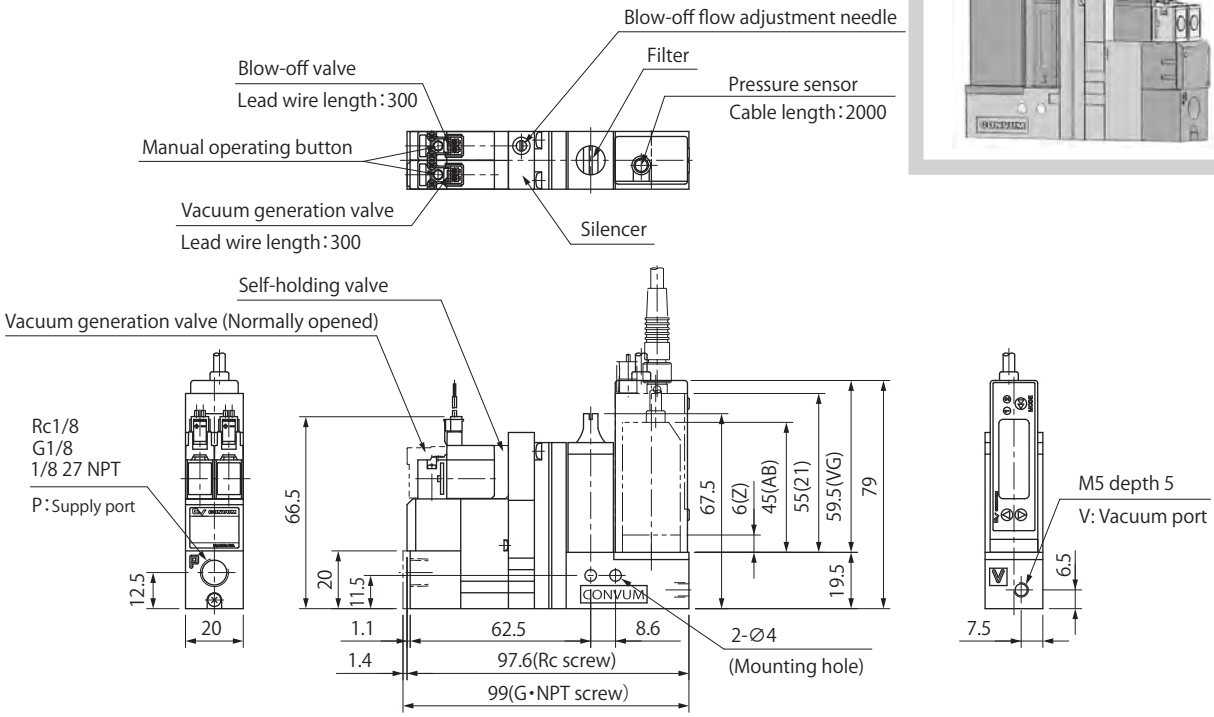

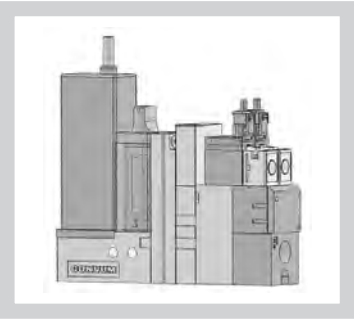

Dimensions

(mm)

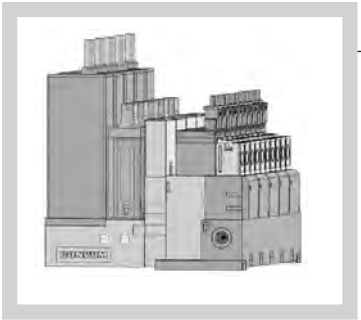

Manifold Unit (without check valve)

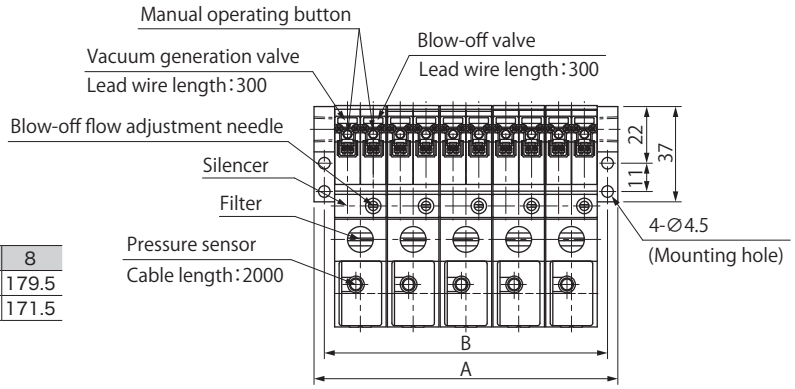

n (No. of units)	1	2	3	4	5	6	7	8
A	36	56.5	77	97.5	118	138.5	159	179.5
B	28	48.5	69	89.5	110	130.5	151	171.5

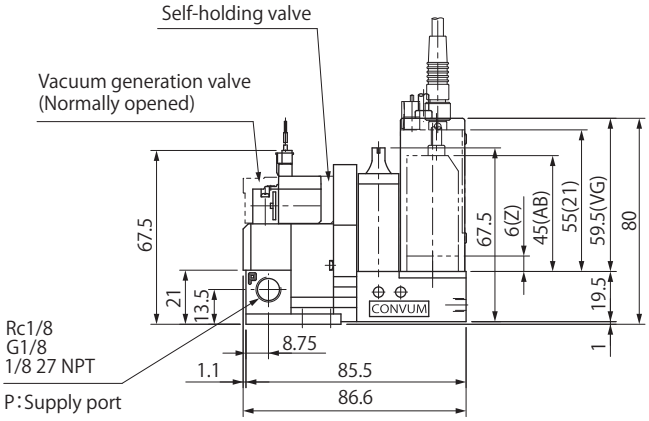

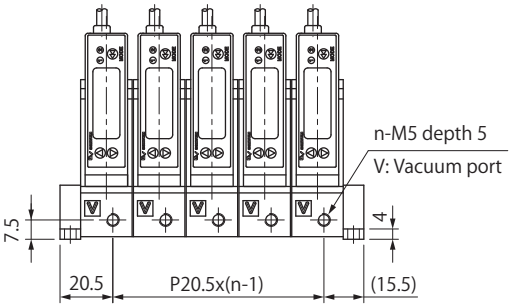

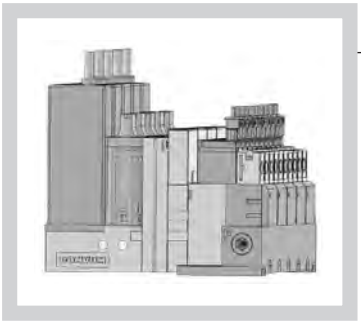

Manifold Unit (with check valve)

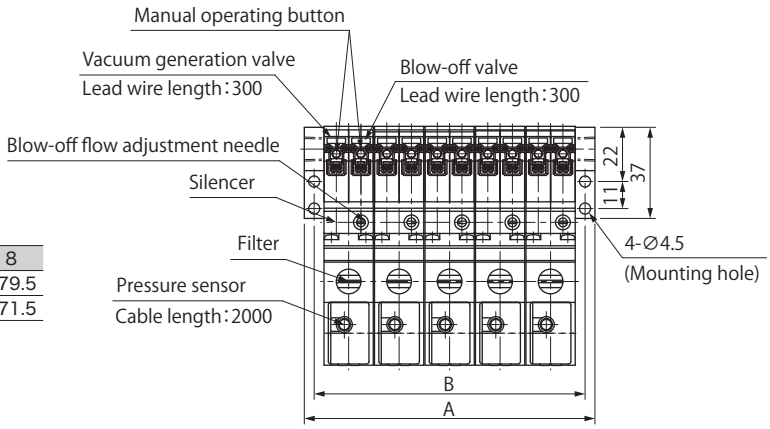

n (No. of units)	1	2	3	4	5	6	7	8
A	36	56.5	77	97.5	118	138.5	159	179.5
B	28	48.5	69	89.5	110	130.5	151	171.5

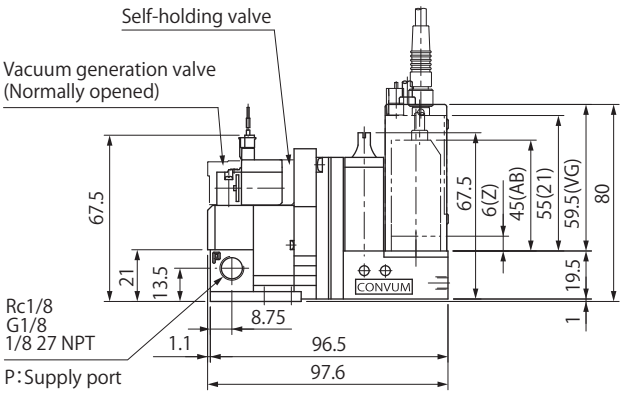

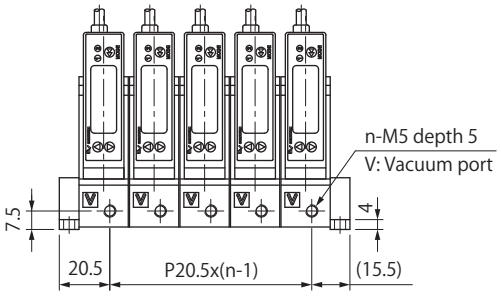

MC72 Series

High Vacuum Flow CONVUM

RoHS

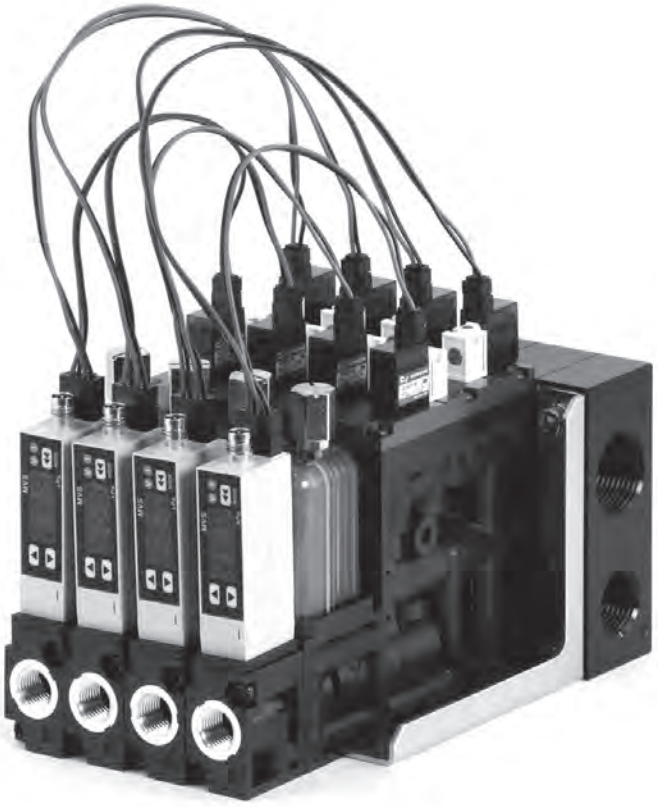

All-in-One Unit

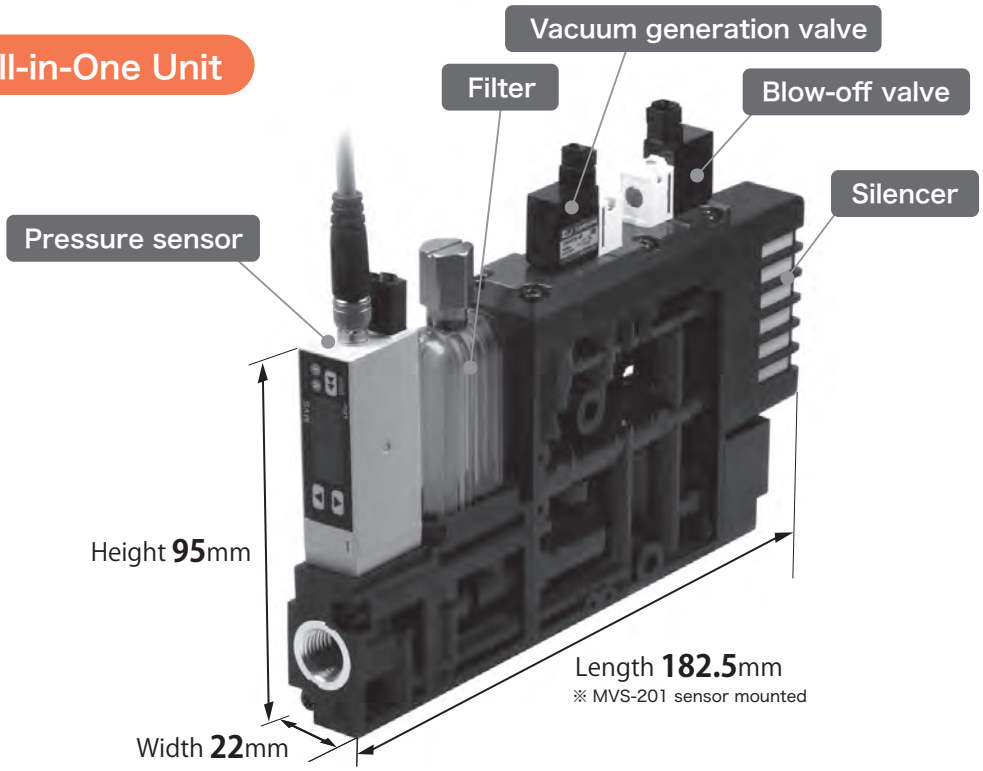

Flexible combinations are selectable

Customizable

- With sensor or not
- Digital display or not
- With check valve or not

Holding workpiece at an emergency stop

- By mounting self-holding valve, it is possible to keep vacuum. It Prevents the workpiece from falling.

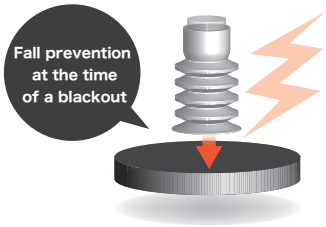

High vacuum flow type

- Applications: Best choice for suction the workpieces with porous surface and heavy workpieces

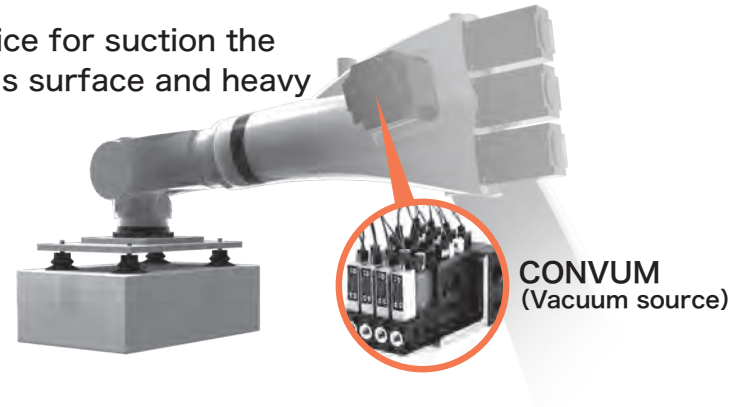

Can be mounted on manifold, up to 5 units

- Manifold make it possible to supply air intensively
- Differ specifications MC72 can be putted together according to various purposes

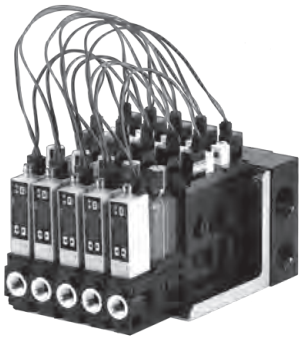

It's easy to increase the CONVUM unit because the manifold can be mounted from both sides.

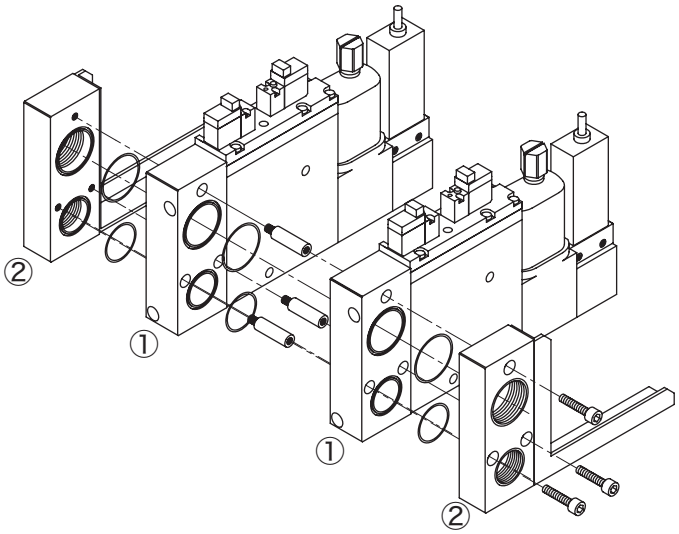

The single unit can be changed to manifold unit with ① part and it's mounted to ② port to increase the number of units.

MC72 High Vacuum Flow CONVUM

How to Order

In case of manifold

MC72	M	15	H	S	VG	C	4	B	L	R	3
	①	②	③	④	⑤	⑥	⑦	⑧	⑨	⑩	⑪

① Body Type

S	Single unit

M	Manifold unit

② Nozzle Type

Symbol	Nozzle size [mm]
15	1.5
20	2.0
25	2.5

③ Maximum Vacuum Pressure [kPa]

Symbol	Type	Vacuum pressure
H	High vacuum type	-87
L	High flow type	-53

⑤ Pressure Sensor

Symbol	Sensor type	Pressure range [kPa]	Display	Switch output	Analog output	Input specifications
AB	MVS-030AB	-101～0	LED	NPN 1output	N/A	N/A
VG	MPS-V23	-101～0	Digital	NPN 2 outputs	DC1～5V	N/A
21	MVS-201 Note1,2	-101～500	Digital	NPN 1 output	N/A	Sink
ZZ	Without sensor, without base/sensor can not be mounted afterwards					
ZS	Without sensor, with base/sensor can be mounted afterwards					

Note1)Energy-saving pressure sensor (solenoid valve control function mode).
Note2)Please select check valve (select C or F in ⑥) in case of using energy-saving function.
※ Please consult with us for PNP output type.

⑨ Valve Connection

L	Lead wire with connector

⑩ Port Size

R	Rc1/4
N	NPT1/4-27 ★
G	G1/4 ★

★are made to order

⑪ Manifold

Symbol	No. of stations
1	1 station
2	2 stations
3	3 stations
4	4 stations
5	5 stations

④ Rated Pressure [MPa]

S	0.5
R	0.35

※ ②③④ Applicable Models

②	③	④	
		S	R
15	H	○	○
	L	○	×
20	H	○	○
	L	○	×
25	H	○	×
	L	×	×

※ Specifications by Nozzle

Nozzle type	Rated pressure [MPa]	Maximum vacuum pressure [kPa]	Suction flow [L/min(ANR)]	Air consumption [L/min(ANR)]
15HS	0.5	-87	55	100
15LS		-53	90	
15HR	0.35	-87	46	
20HS	0.5		95	180
20LS		-53	130(110)[Note1]	
20HR	0.35	-87	80	
25HS	0.5		140(120)[Note1]	265

Note1) Figure in ( ) is when check valve option is selected.

⑥ Blow-off Valve/Check Valve/Filter

Symbol	Blow-off valve	Check valve	Filter
C	With	With	With
D	With	N/A	
E	N/A	N/A	
F	With	With	N/A
G	With	N/A	
Z	N/A	N/A	

⑦ Valve Voltage

Symbol	Voltage
4	DC24V

⑧ Vacuum Generation Valve Type

A	Normally opened
B	Normally closed
W	Self-holding [Note1]

Note1) The energy-saving function of a sensor cannot work if the self-holding valve is selected.

Recommend! These model number below satisfy general needs and functions with product advantages. ※Please feel free to contact us.

Product code	Model number	Specifications			
		Nozzle size(mm)	Pressure sensor	Check valve	Filter
202700034	MC72S15HSZZC4BLR	1.5	N/A	With	With
202700013	MC72S15HSABC4BLR	1.5	Electronic pressure sensor	With	With
202700004	MC72S15HSVGC4BLR	1.5	Digital	With	With
202700003	MC72S15HS21C4BLR	1.5	Digital, energy-saving	With	With
202700196	MC72S25HSZZC4BLR	2.5	N/A	With	With
202700083	MC72S25HSABC4BLR	2.5	Electronic pressure sensor	With	With
202700026	MC72S25HSVGC4BLR	2.5	Digital	With	With
202700009	MC72S25HS21C4BLR	2.5	Digital, energy-saving	With	With

Maintenance Parts

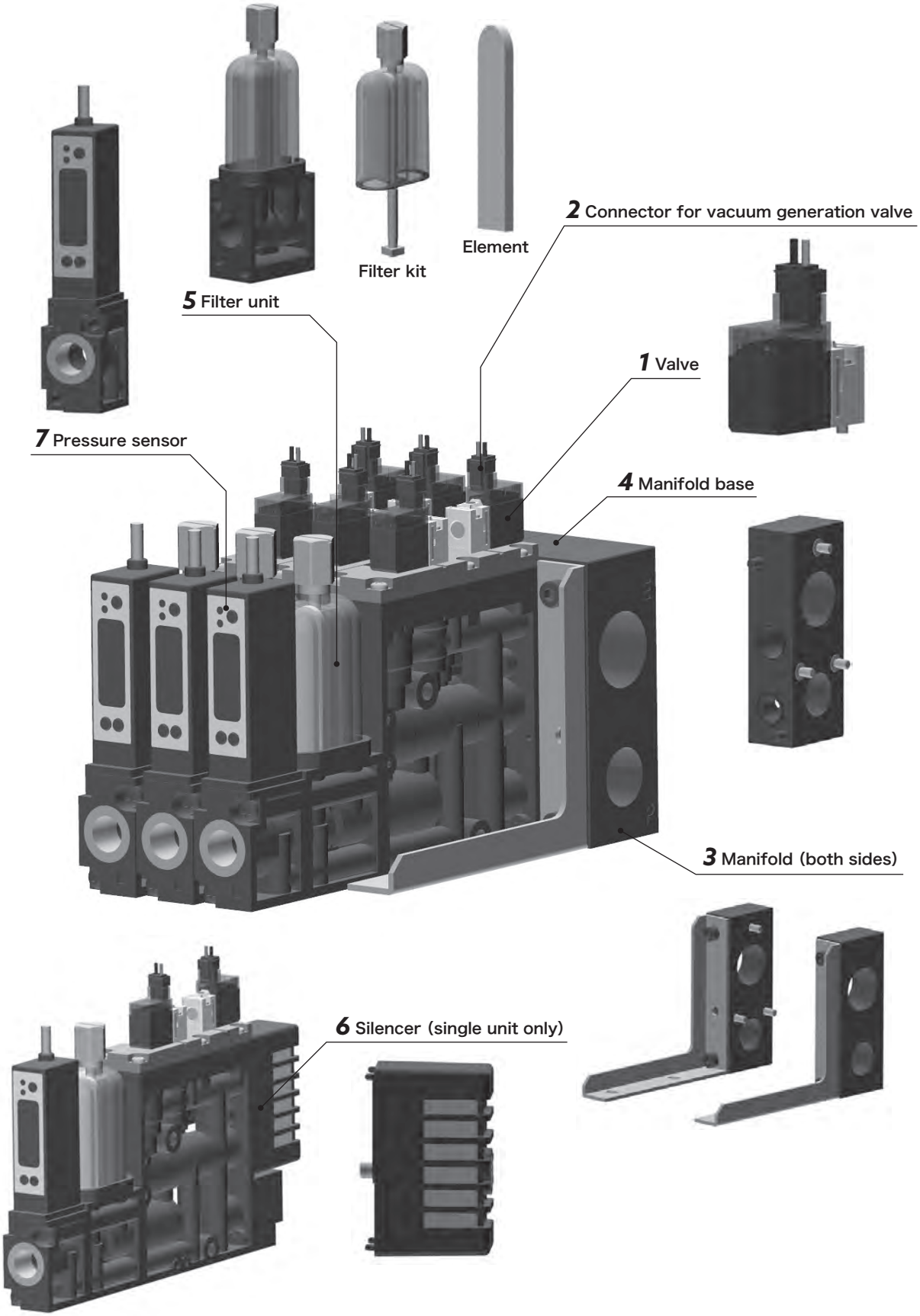

1 Valve

CKV010-4E
Common for vacuum generation and blow-off

※ Lead wire length 300mm
※ Gasket and mounting screw are included

LV290-4E
Self-holding type

※ Lead wire length 300mm
※ Gasket and mounting screw are included

2 Connector for Vacuum Generation Valve
※With lead wire

CA 2 — V4 — 6

Applicable valve

2	CKV010-4E
3	LV290-4E

Lead wire length(mm)

Blank	300
6	600
10	1000
20	2000 Note1
30	3000 Note2

Note1,2) CKV010-4E only.

3 Manifold (Both sides)

MC7 — MB R

Air supply port

Symbol	Type
R	Rc1/2
N	1/2NPT
G	G1/2

4 Manifold base

MC7 — MB

※For change from single unit to manifold unit.
Mounting screws, spacer and O-ring are included

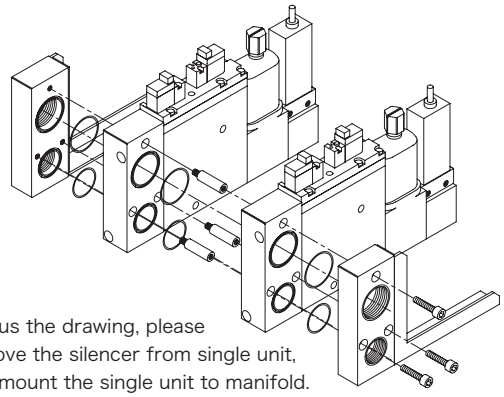

※Thus the drawing, please remove the silencer from single unit, and mount the single unit to manifold.

5 Filter

MC7 — E

U	Filter unit (with element and base)
F	Filter kit (with element)
E	Only element

MC7-U

MC7-F

MC7-E

6 Silencer (single unit only)
※Mounting screw is included

CVK — S

7 Pressure Sensor
※O ring and mounting screw are included

Model number	Specifications
MVS-030AB-MC72	Electronic, LED display
MPS-V23C-NGA-MC7	Digital display
MVS-201-MC72-A	Energy-saving, digital display (normally opened)
MVS-201-MC72-B	Energy-saving, digital display (normally closed)
MVS-201-MC72-W	Wire-saving, digital display (self-holding)

8 Connector Cable for MVS-201 Sensor and Valve

CVK2 — C201 — W

Blank	Normally opened, normally closed
W	Self-holding

Construction

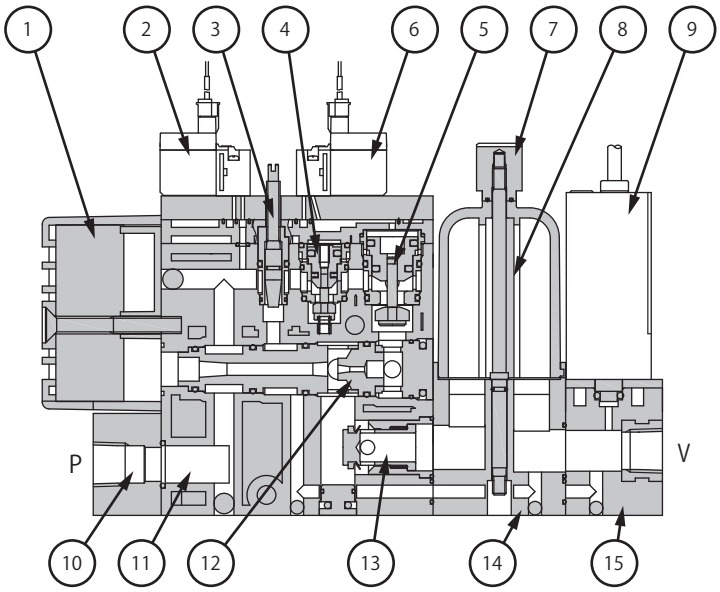

Component Parts

No.	Parts name	Material
1	Silencer	PBT, PVF
2	Blow-off valve	-
3	Blow-off flow adjustment needle	SUS, aluminum, NBR
4	Blow-off poppet valve	Aluminum, NBR, SUS, FKM
5	Vacuum generation poppet valve	Aluminum, NBR, SUS, FKM
6	Vacuum generation valve	-
7	Filter Ass'y	PA, brass, NBR
8	Filter element	PVF
9	Pressure sensor	-
10	Supply base	Aluminum
11	Body	PA
12	Nozzle kit	Aluminum, NBR
13	Check valve	Aluminum, brass, NBR
14	Filter base	PA
15	Sensor base	PA

Symbol

Normally Opened

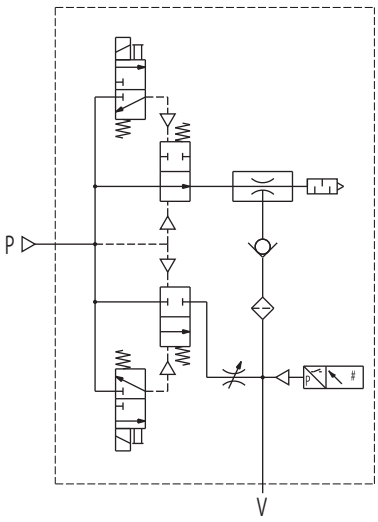

Normally Closed

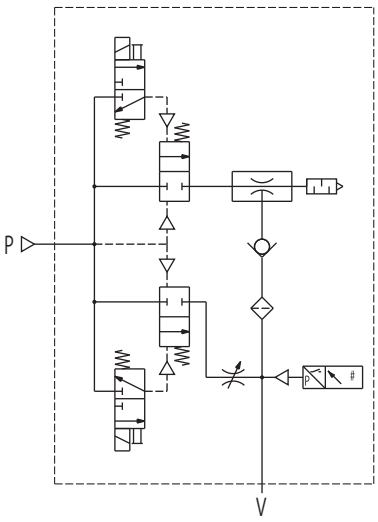

Self-holding

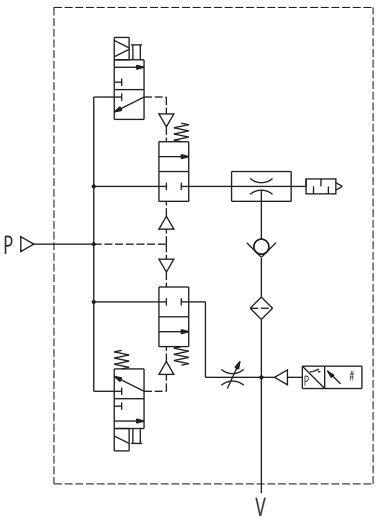

CONVUM Specifications

Description ＼ Model number	Unit	MC72□15			MC72□20			MC72□25
		HS	LS	HR	HS	LS	HR	HS
Nozzle size	mm	1.5			2.0			2.5
Fluid		Non-lubricated compressed air						
Ambient temperature	℃	0～60 (No Freezing)						
Operating pressure range	MPa	0.2～0.6						
Vacuum generation valve type		Normally opened (A)/normally closed (B)/self-holding (W)						
Filter element filtration	μm	130						
Filter filtration area	mm^2	560						
Rated pressure	MPa	0.5		0.35	0.5		0.35	0.5
Maximum vacuum pressure	kPa	-87	-53	-87		-53	-87	
Suction flow	L/min(ANR)	55	90	46	95	130 (110) Note1	80	140 (120) Note1
Blow-off flow	L/min(ANR)	100						
Air consumption	L/min(ANR)	100			180			265

Note1) Figure in (　) is when check valve option is selected.

Valve Specifications

Description ＼ Model number		Unit	CKV010-4E	LV290-4E
Valve structures			3 port, direct operated poppet valve	
Rated voltage		V	DC24	
Allowable voltage fluctuation		%	±10	
Power consumption (current value)	Vacuum generation	W(mA)	1(42)	1.3(54)
	Vacuum suspension			1.5(63)
Minimum energization time		ms	-	30
Insulation type			Class B	
Manual override operation			Non-lock	N/A
Display/surge killer			LED/diode	
Lead wire			Lead wire with connector(300mm)	
Weight (with lead wire)		g	15.3	19.5

Weight (g)

Specifications									
Single Unit	Vacuum generation valve type	Sensor	With filter			Without filter		
			Blow-off Valve/check valve					
			C	D	E	F	G	Z
Single	Normally opened Normally closed	N/A (ZZ)	383	371	362	312	300	291
		N/A (ZS)	375	363	354	304	292	283
		With MVS-AB	388	376	367	317	305	296
		With MPS-V23	397	385	376	326	314	305
		With MVS-201	397	385	376	326	314	305
	Self-holding	N/A (ZZ)	386	374	365	315	303	294
		N/A (ZS)	378	366	357	307	295	286
		With MVS-AB	391	379	370	320	308	299
		With MPS-V23	400	388	379	329	317	308
		With MVS-201	400	388	379	329	317	308
Single unit for manifold	Normally opened Normally closed	N/A (ZZ)	518	505	496	446	434	425
		N/A (ZS)	510	497	488	438	426	417
		With MVS-AB	523	510	501	451	439	430
		With MPS-V23	532	519	510	460	448	439
		With MVS-201	532	519	510	460	448	439
	Self-holding	N/A (ZZ)	521	508	499	449	437	428
		N/A (ZS)	513	500	491	441	429	420
		With MVS-AB	526	513	504	454	442	433
		With MPS-V23	535	522	513	463	451	442
		With MVS-201	535	522	513	463	451	442

No. of station	1～5 stations
Weight	388

Calculation of Weight for Manifold Type

Single unit for manifold weight×No. of stations+manifold base

Example 1) 5 stations manifold with self-holding valve, MPS-23sensor, filter, blow-off valve and check valve
535×5+388= 3,063g

Example 2) 4 stations manifold with normally closed valve, without sensor (ZZ) , with filter and blow-off valve, without check valve
505×4+388= 2,408g

Pressure Sensor Specifications

Description ＼ Model number		Unit	MVS-030AB-MC7	MPS-V23C-NGA-MC7	MVS-201-MC72-A/B/W
Fluid			Air (vacuum), non-corrosive gas, non-flammable gas		
Diaphragm			Silicon diaphragm		
Rated pressure range		kPa	-101～0	-101～0	-101～500
Setting pressure range		kPa	-101.2～-2.7	-101.3～10	-101～500
Withstand pressure		MPa	0.5	0.3	0.8
Ambient temperature range		℃	0～50(No freezing)		
Ambient humidity range		%RH	35～85(No condensation)		
Power supply voltage		V	DC12～24±10%, ripple(Vp-p)10% or less	DC12～24±10%, ripple(Vp-p)10% or less	DC24±10%, ripple(Vp-p) 5% or less Note1
Current consumption		mA	20	55 or less	45 (not include the driven current for valve)
Switch output	Type		NPN open collector 1 output	NPN open collector 2 outputs	NPN open collector 1 output
	Maximum load current	mA	80	80	125
Analog output			-	DC1～5V(±0.1) linearity1% F.S. output impedance1kΩ	-
Digital input (suction/blow off command)			-	-	Non-contact 1 input (more than 1msec)
Repeatability		%	±3F.S.	±0.2F.S. 1digit or less	±0.3F.S. 1digit or less
Temperature characteristic		%	Less than ±2F.S. (At standard temperature 25℃, range 0～50℃)		
Response time		ms	2 or less	2.5 or less	
Hysteresis			0.1～0.5kPa	Variable	
Display	Digital		-	3 1/2 digital, 7-segment, red color LED	3-digital, 7-segment, red color LED
	Operation		Red color LED (ON lighting)	OUT1:green color LED(ON lighting), OUT2:red color LED(ON lighting)	Output ON/OFF: red color LED Vacuum generation valve ON/OFF: green color LED
Protection	Reverse-current protection		With		
	Overvoltage protection		With		
	Output short circuit protection		With		
	IP class		IP40		
Vibration resistance			10～150Hz, total amplitude 1.5mm, 50m/s^2 2 hours each direction of XYZ	10～55Hz, total amplitude 1.5mm, 50m/s^2 2 hours each direction of XYZ	10～150Hz, total amplitude 1.5mm, 50m/s^2 2 hours each direction of XYZ
Shock resistance		m/s^2	980, 3 times each direction of XYZ		100, 3 times each direction of XYZ
Electrical connection			Grommet		M8 connector
Cable			ϕ4 3 lead wires X 0.15mm^2 2m	ϕ4 0.15mm^2 5 lead wires 2m	ϕ4 0.3mm^2 4 lead wires 2m

Note 1) It must be consistent with the solenoid valve drive voltage.

Performance Charts

15HS

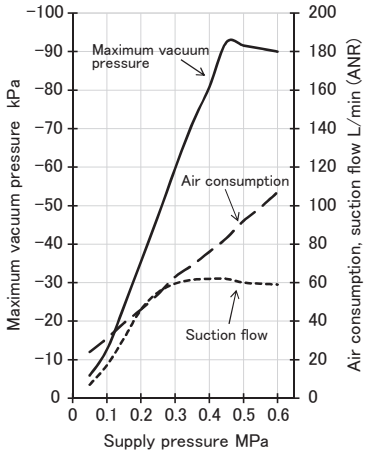

15LS

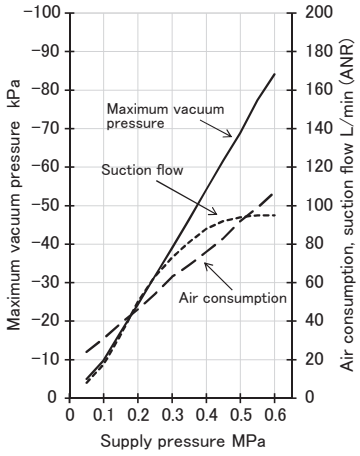

15HR

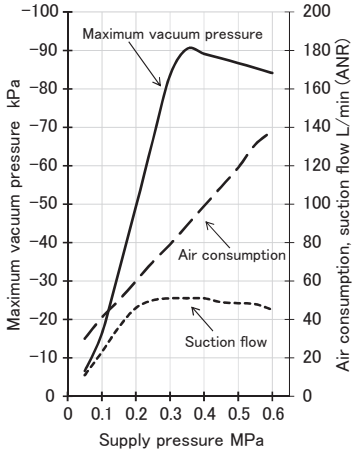

20HS

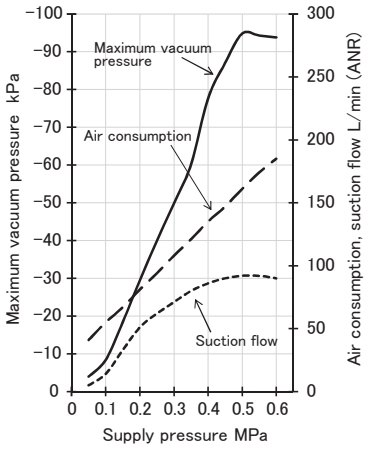

20LS

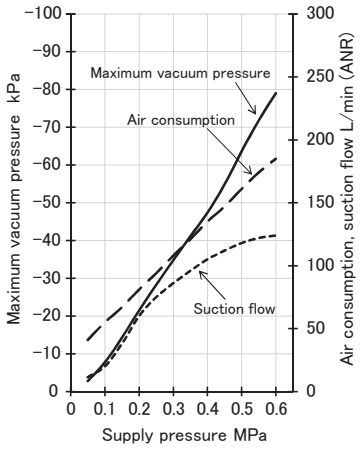

20HR

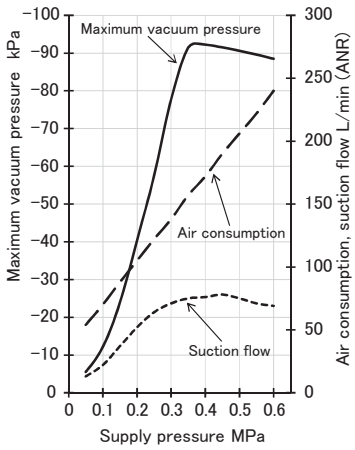

25HS

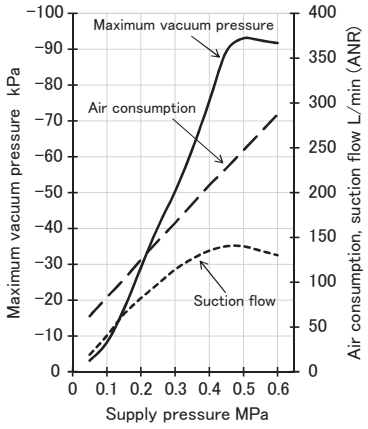

Suction Flow / Vacuum Pressure Characteristics

15HS

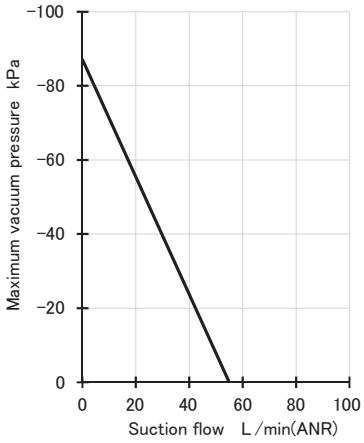

15LS

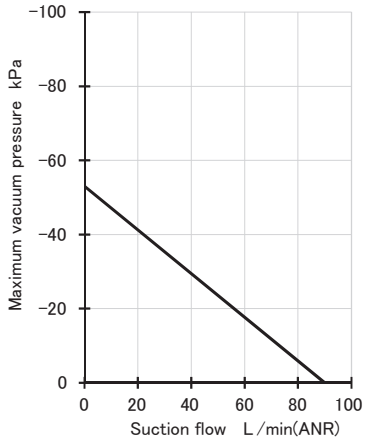

15HR

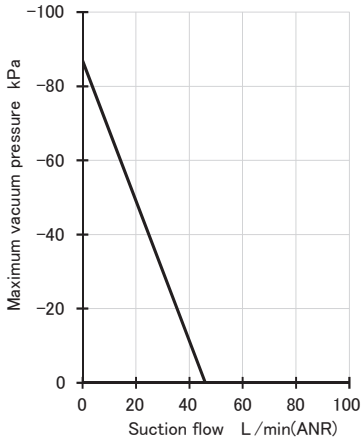

20HS

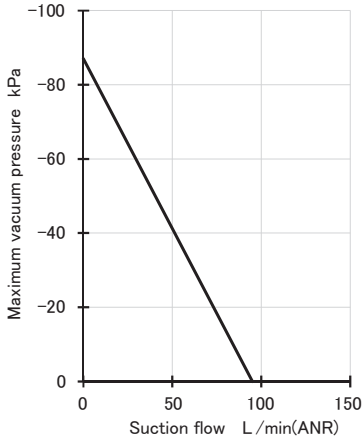

20LS

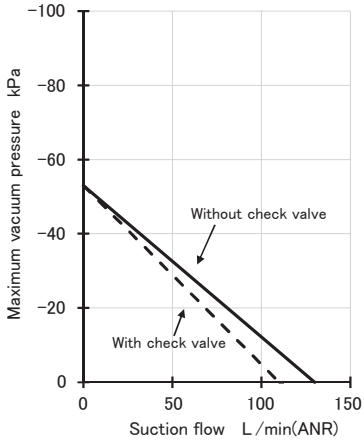

20HR

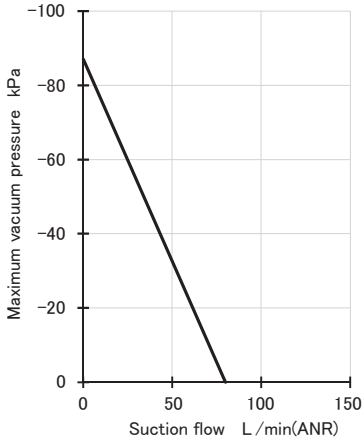

25HS

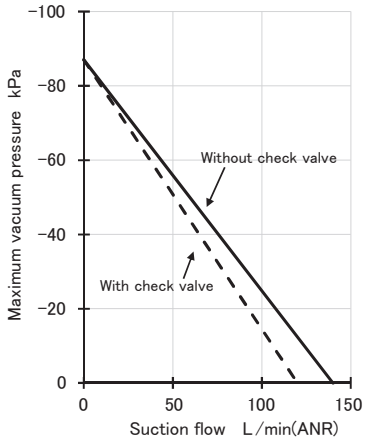

Dimensions

(mm)

Single Unit (with sensor, filter unit)

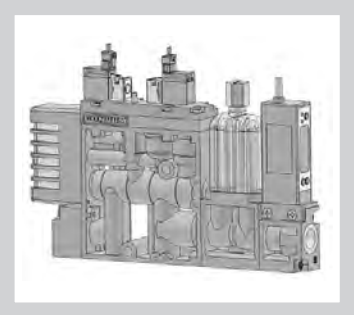

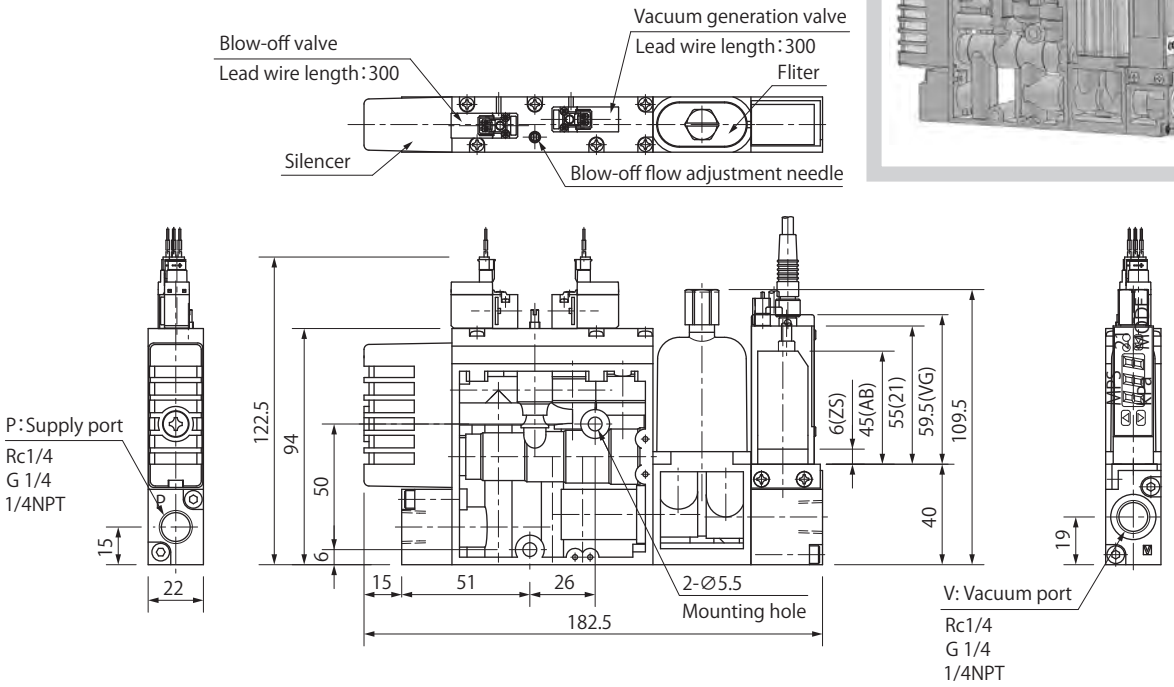

Single Unit (without sensor)

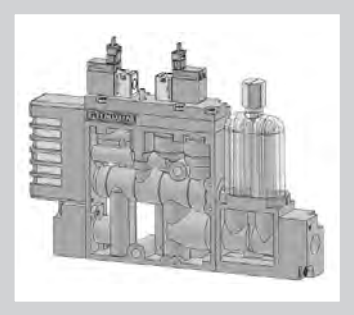

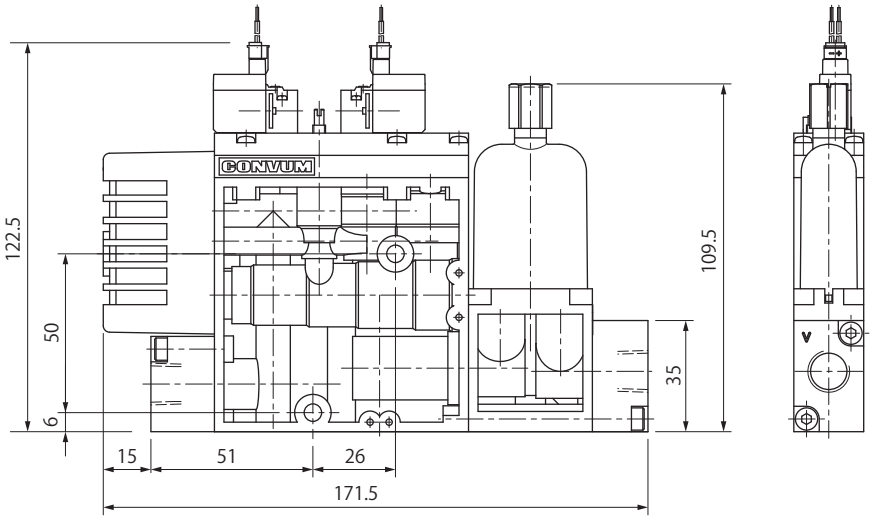

Dimensions

(mm)

Single Unit
(without filter unit)

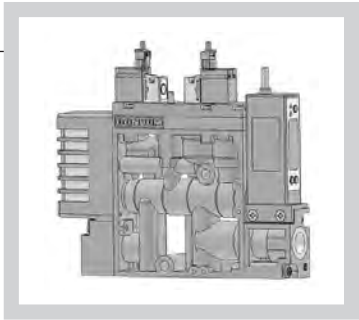

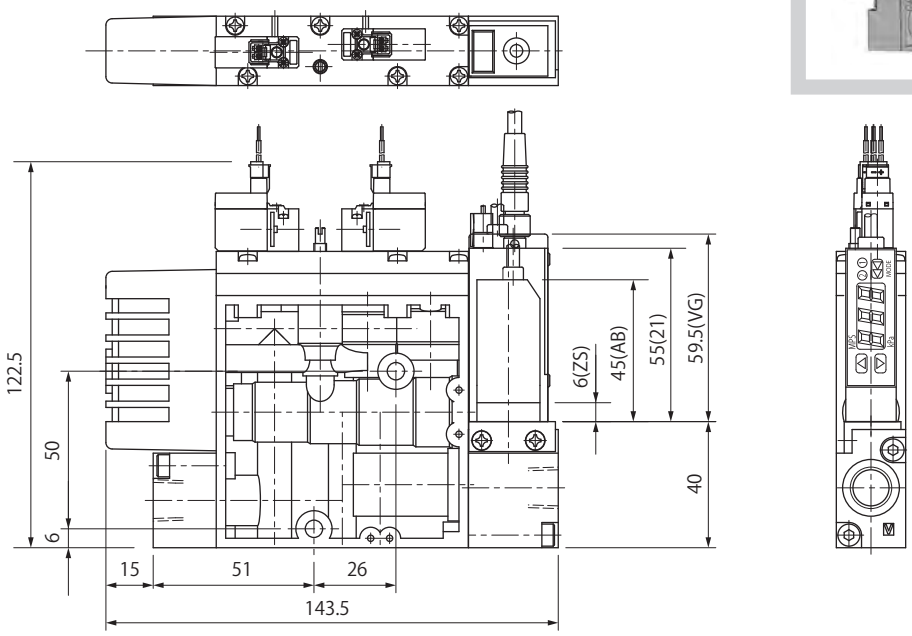

Single Unit
(without sensor, filter unit)

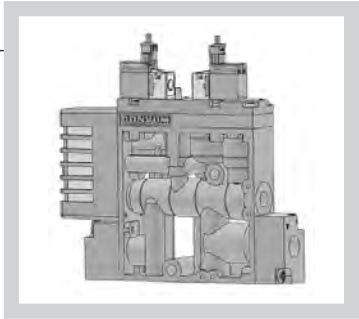

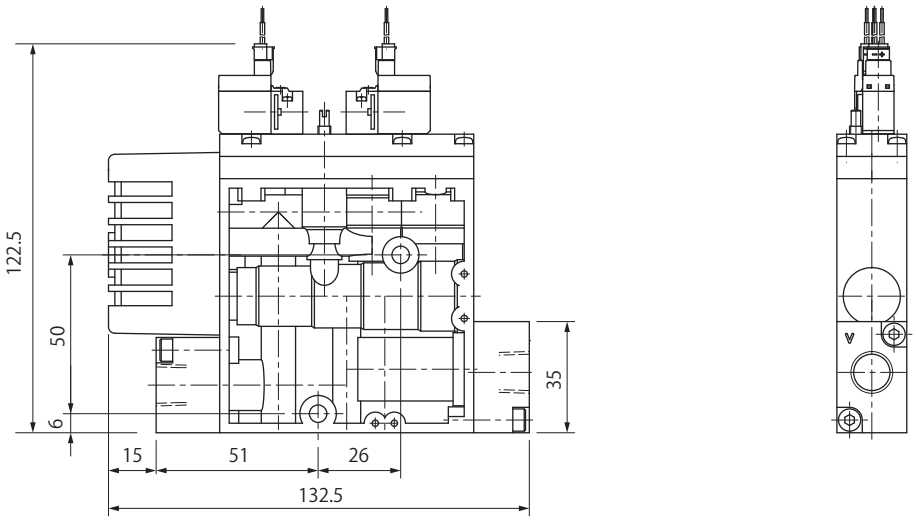

Dimensions

(mm)

Manifold Unit

n (No. of units)	1	2	3	4	5
A	60	82.5	105	127.5	150
B	42	64.5	87	109.5	132

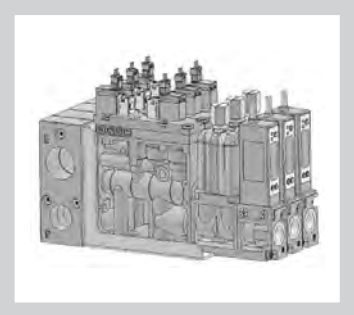

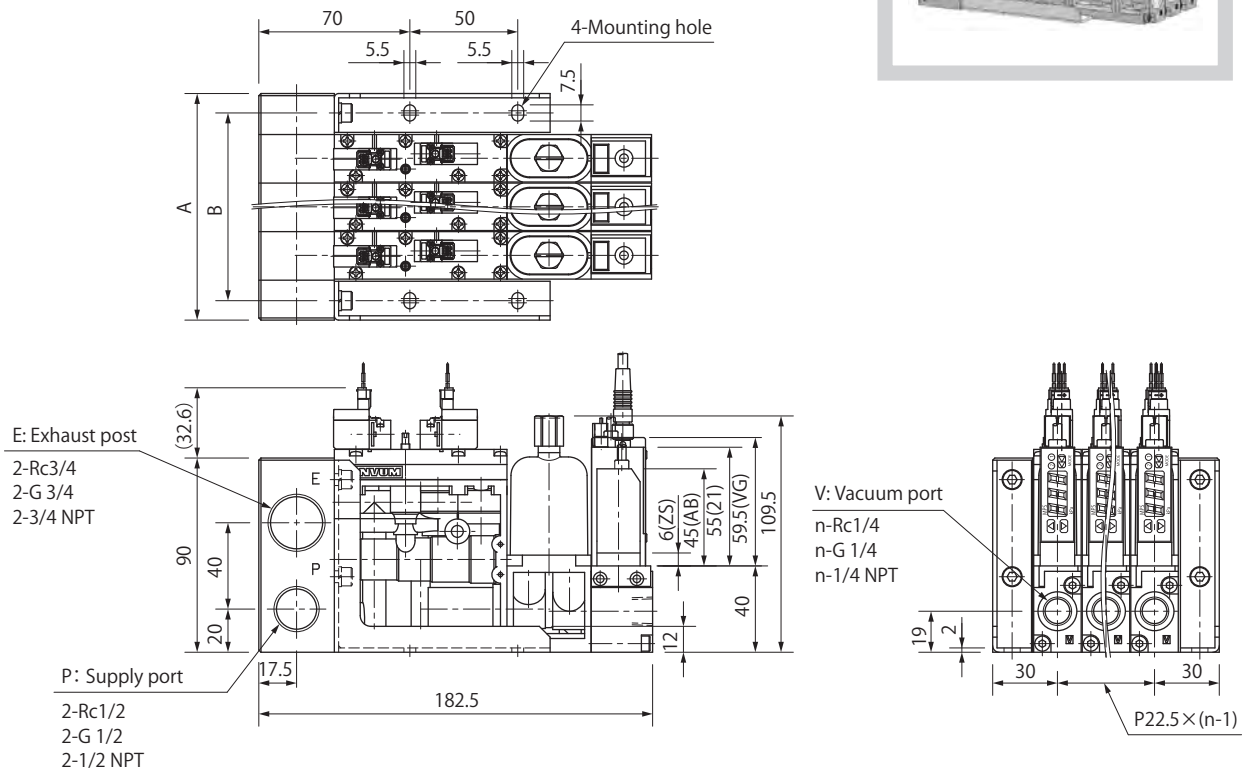

CCV Series

Miniature CONVUM

RoHS

Miniature size vacuum ejector

- Suitable for using in the small space

Long life

- No moving parts, simple construction

How to Order

CCV－04HS

Specifications

Description ＼ Model number	Unit	CCV-04HS
Nozzle size	mm	0.4
Fluid		Non-lubricated compressed air
Ambient temperature	℃	0～60(No Freezing)
Operating pressure range	MPa	0.3～0.6
Rated pressure	MPa	0.5
Maximum vacuum pressure	kPa	-85
Suction flow	L/min(ANR)	2.5
Air consumption	L/min(ANR)	7.1
Weight	g	10

Construction

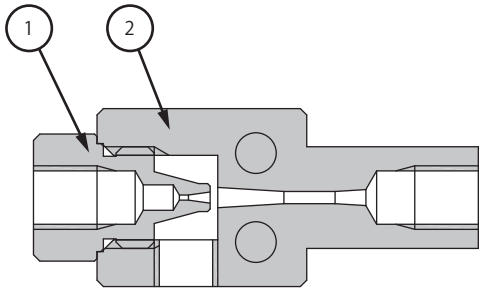

Component Parts

No.	Parts name	Material
1	Nozzle	Aluminum
2	Body	Aluminum

Symbol

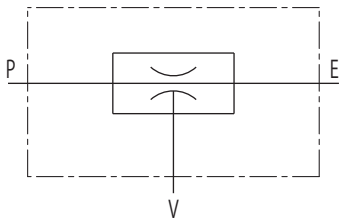

Performance Charts

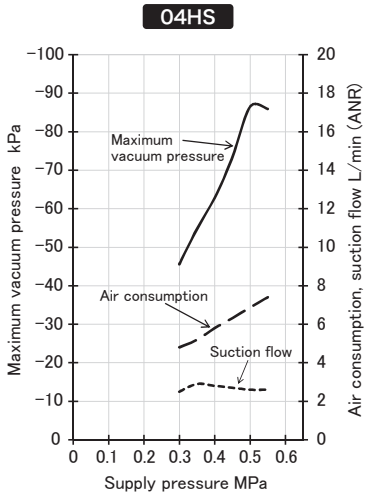

Suction Flow / Vacuum Pressure Characteristics

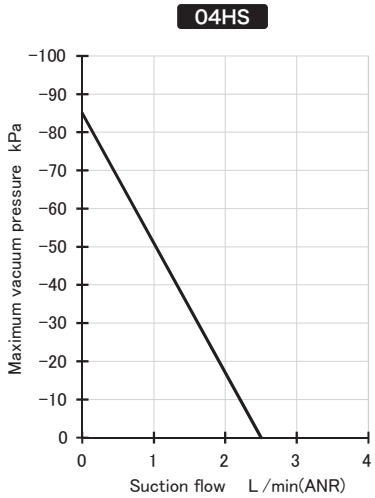

Dimensions

(mm)

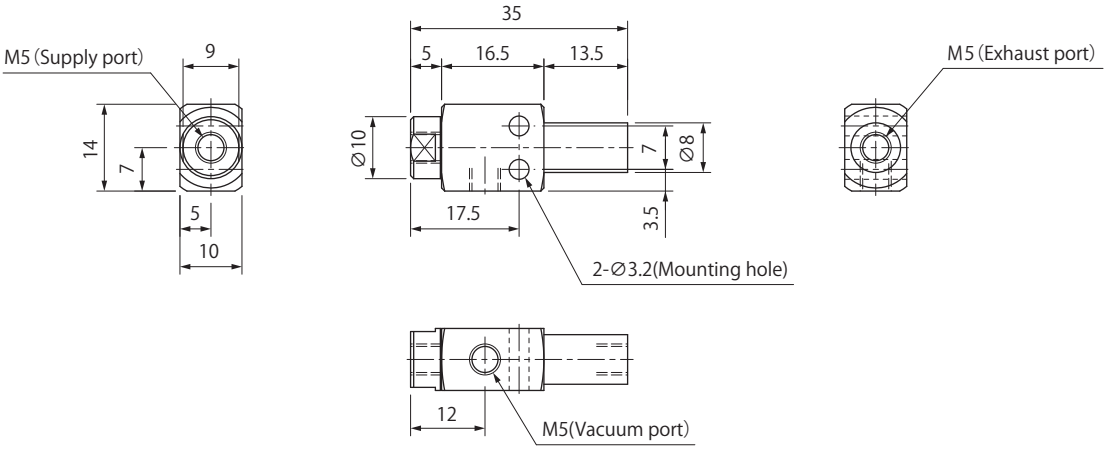

MCV Series

Standard Resin CONVUM

RoHS

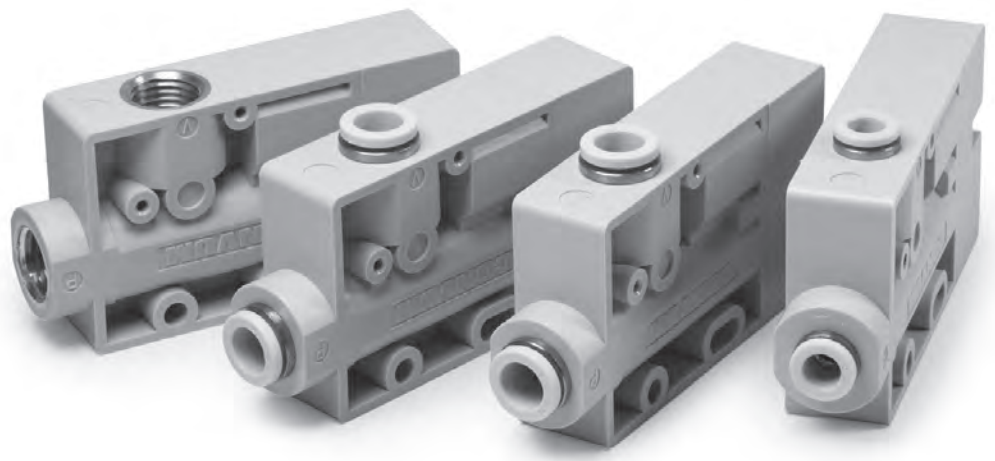

Push-in connector mounted, firmly contact

The mounting method of push-in connector is improved.

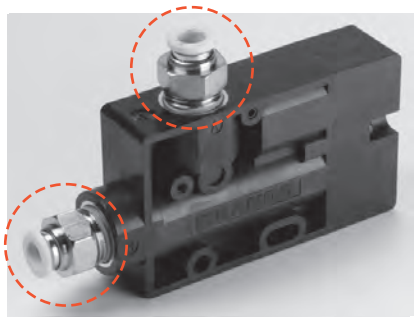

Current type : Screw type

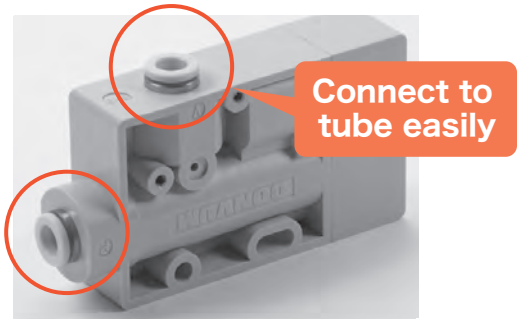

New type: Press-fitting type

Lighter weight!

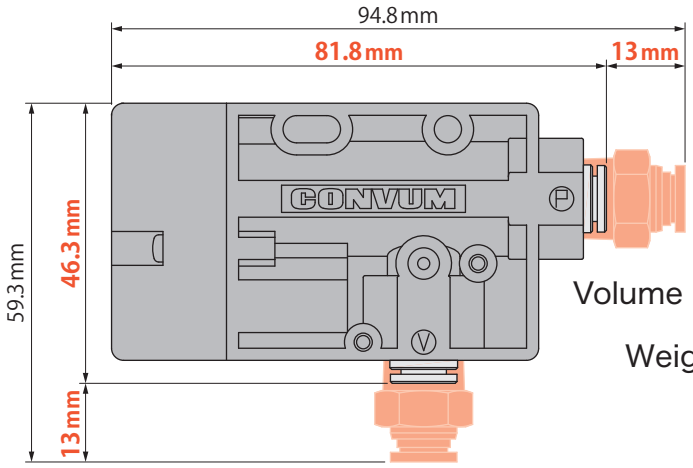

Height and width: 13mm shorter

※ Tube diameter ϕ6

Volume 3.7cm³ **6.1**% reduced

Weight 56g **29**% reduced

※ Compared with current MCV-10

How to Order

MCV – 10 H S S – 66

① ② ③ ④ ⑤

※①②③ Applicable Models

①	②	③ S	③ R
10	H	○	○
	L	○	×
13	H	○	○
	L	○	×
15	H	○	○

① Nozzle Type

Symbol	Nozzle size [mm]
10	1.0
13	1.3
15	1.5

② Maximum Vacuum Pressure [kPa]

Symbol	Vacuum Pressure
H	-87
L	-55

③ Rated Pressure [MPa]

S	0.45
R	0.35

④ Pressure Sensor

Blank	N/A
S	With

※Switch can not be mounted afterwards.

⑤ Supply Port/ Vacuum Port Size

Symbol	Supply port [mm]	Supply port [mm]
66	6	6
88	8	8
RP	Rp1/4	Rp1/4

Model List

MCV-10	MCV-13	MCV-15
MCV-10HS(S)-66	MCV-13HS(S)-88	MCV-15HS(S)-88
MCV-10LS(S)-66	MCV-13LS(S)-88	MCV-15HR(S)-88
MCV-10HR(S)-66	MCV-13HR(S)-88	MCV-15HS(S)-RP
MCV-10HS(S)-88	MCV-13HS(S)-RP	MCV-15HR(S)-RP
MCV-10LS(S)-88	MCV-13LS(S)-RP	
MCV-10HR(S)-88	MCV-13HR(S)-RP	
MCV-10HS(S)-RP		
MCV-10LS(S)-RP		
MCV-10HR(S)-RP		

Specifications by Nozzle

Nozzle type	Rated pressure [MPa]	Maximum vacuum pressure [kPa]	Suction flow [L/min(ANR)]	Air consumption [L/min(ANR)]
10HS	0.45	-87	24	46
10LS		-56	38	
10HR	0.35	-87	22	
13HS	0.45	-90	53	78
13LS		-58	73	
13HR	0.35	-88.5	43	85
15HS	0.45	-87	56	95
15HR	0.35	-87	49	105

Maintenance Parts

- **Switch Unit**
  MCV-CK

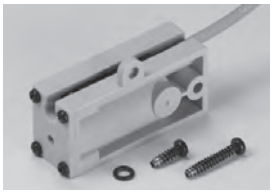

※Switch can not be mounted afterwards.

- **Reed Switch**
  MT-07RL

- **Silencer Element**
  MCV-S

Recommend! These model number below satisfy general needs and functions with product advantages. ※Please feel free to contact us.

Product code	Model number	Specifications			
		Nozzle size(mm)	Supply port(mm)	Vacuum port(mm)	Switch
204300001	MCV-10HS-66	1.0	6	6	N/A
204300031	MCV-15HS-88	1.5	8	8	N/A
204300002	MCV-10LS-66	1.0	6	6	N/A
204300004	MCV-10HSS-66	1.0	6	6	With
204300033	MCV-15HSS-88	1.5	8	8	With

CONVUM Specifications

Description \ Model number	Unit	MCV-10			MCV-13			MCV-15	
		HS	LS	HR	HS	LS	HR	HS	HR
Nozzle size	mm	1.0			1.3			1.5	
Fluid		Non-lubricated compressed air							
Ambient temperature	℃	0～60 (No Freezing)							
Operating pressure range	MPa	0.1～0.6							
Rated pressure	MPa	0.45		0.35	0.45		0.35	0.45	0.35
Maximum vacuum pressure	kPa	-87	-56	-87	-90	-58	-88.5	-87	-87
Suction flow Note1)	L/min(ANR)	24	38	22	53	73	43	56	49
Air consumption Note2)	L/min(ANR)	46			78		85	95	105

Note1,2) In case of at rated pressure.

Switch Unit Specifications

Description \ Model number	Unit	MCV-CK
Fluid		Air (vacuum), Non-corrosive gas
Setting pressure range	kPa	-40～-70 (default setting is -40kPa)
Ambient temperature	℃	0～60 (No Freezing)
Switch type		Reed switch, normally opened (N.O)
Rated voltage	V	AC/DC5～240
Maximum load current	mA	50
Repeatability	kPa	±10
Hysteresis	kPa	15±5
Reed Switch model		MT-07RL
Cable length	mm	1000
Weight (with cable)	g	22.5

Reed Switch Specifications

Description \ Model number	Unit	MT-07RL
Switch type		Reed switch
Mounting type		Groove type
Load voltage	V	AC/DC5～240
Load current	mA	max 50
Contact capacitance	W	max 6
Voltage drop	V	max 2.5
Ambient temperature	℃	-10～70 (No Freezing)
IP class		IP67
Protection circuit		Without
Cable		O.D. ϕ 2.8 2 cores gray PU 1m
Operation indicator		Green color LED
Weight (with cable)	g	10.1

Weight (g)

• CONVUM Body (without switch)

Port type	MCV-10			MCV-13			MCV-15	
	HS	LS	HR	HS	LS	HR	HS	HR
66/88	56			66			67	
RP	51			62			62	

• Switch Unit/Reed Switch

Model number	Weight
MCV-CK	22.5
MT-07RL	10.1

Construction

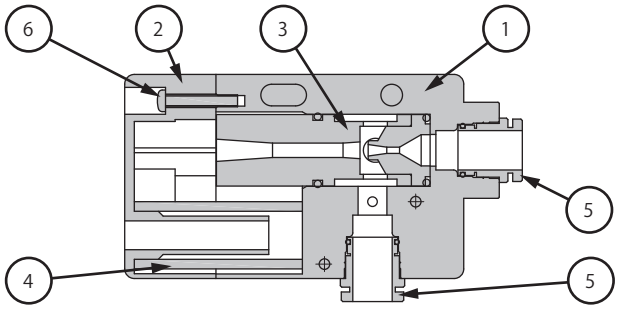

Component Parts

No.	Parts name	Material
1	Body	PA
2	Silencer case	PA
3	Nozzle kit	Al, NBR
4	Silencer element	PVA
5	Push-in connector	-
6	Screw	-

Symbol

Without switch

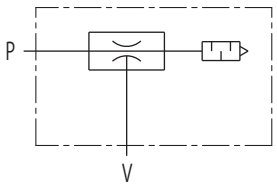

With switch

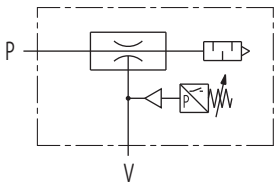

Performance Charts

10HS

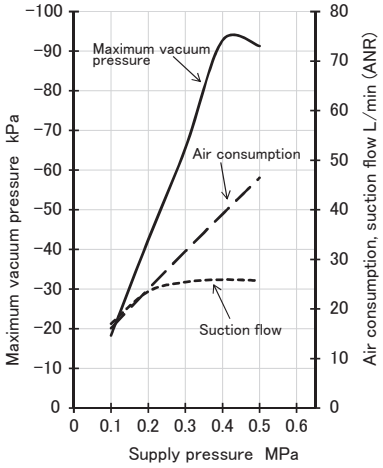

10LS

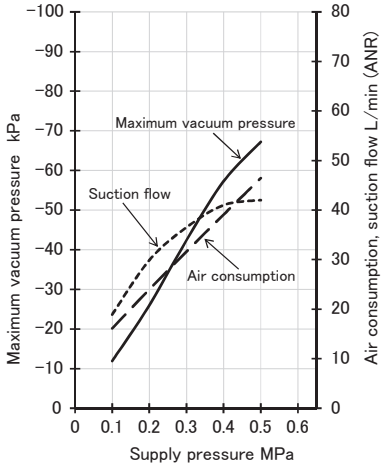

10HR

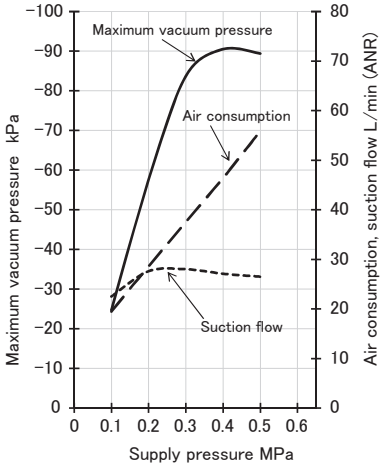

13HS

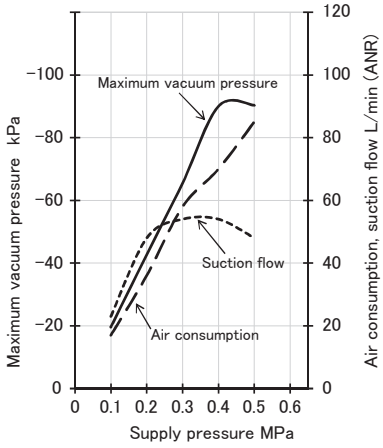

13LS

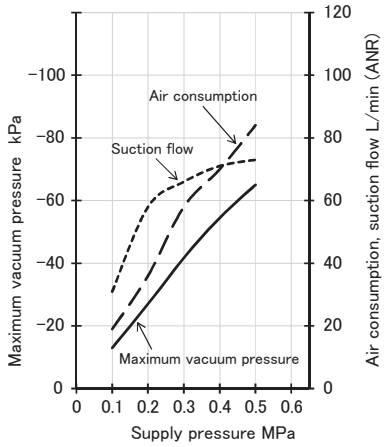

13HR

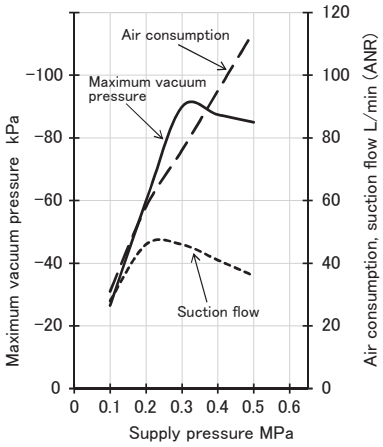

15HS

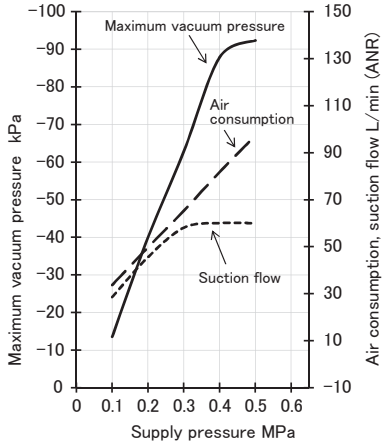

15HR

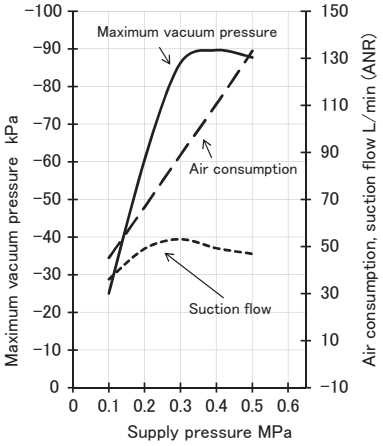

Suction Flow / Vacuum Pressure Characteristics

10HS

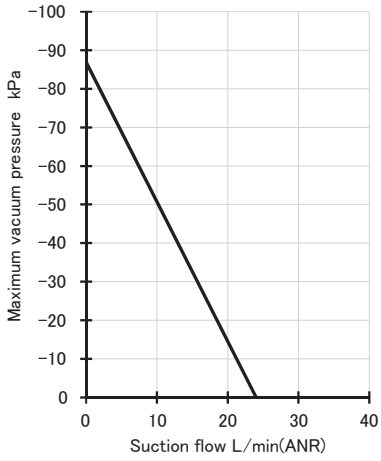

10LS

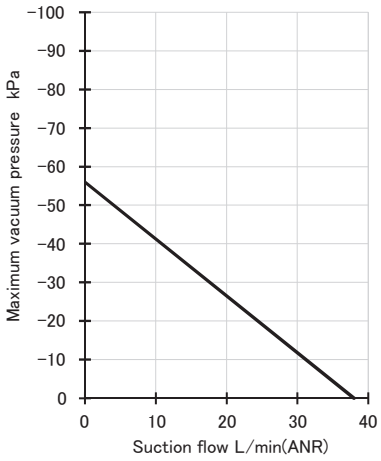

10HR

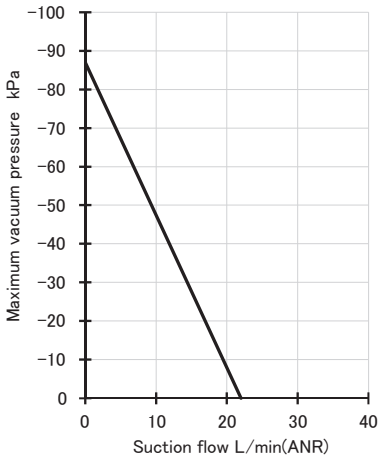

13HS

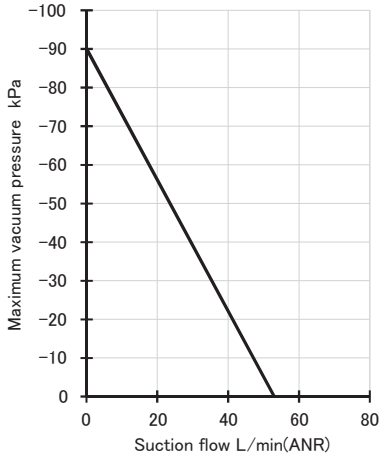

13LS

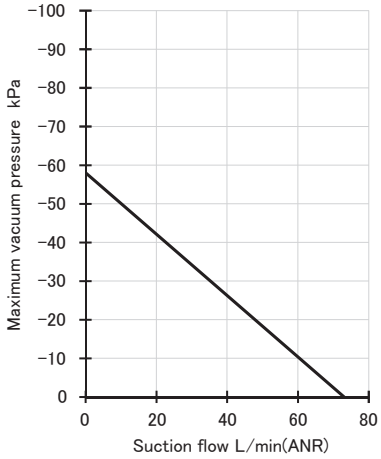

13HR

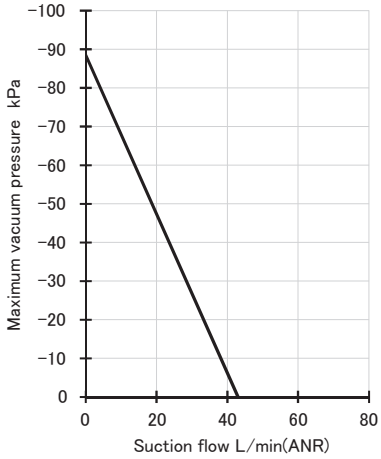

15HS

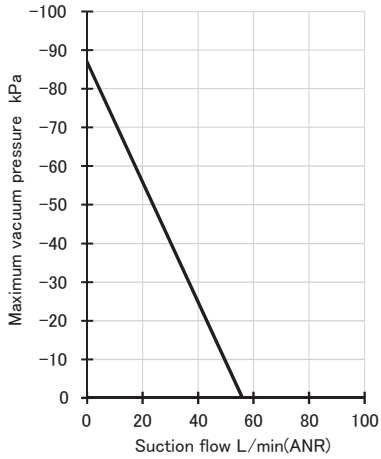

15HR

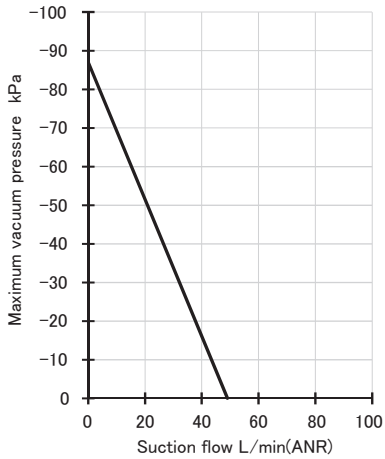

Dimensions

(mm)

Without Switch

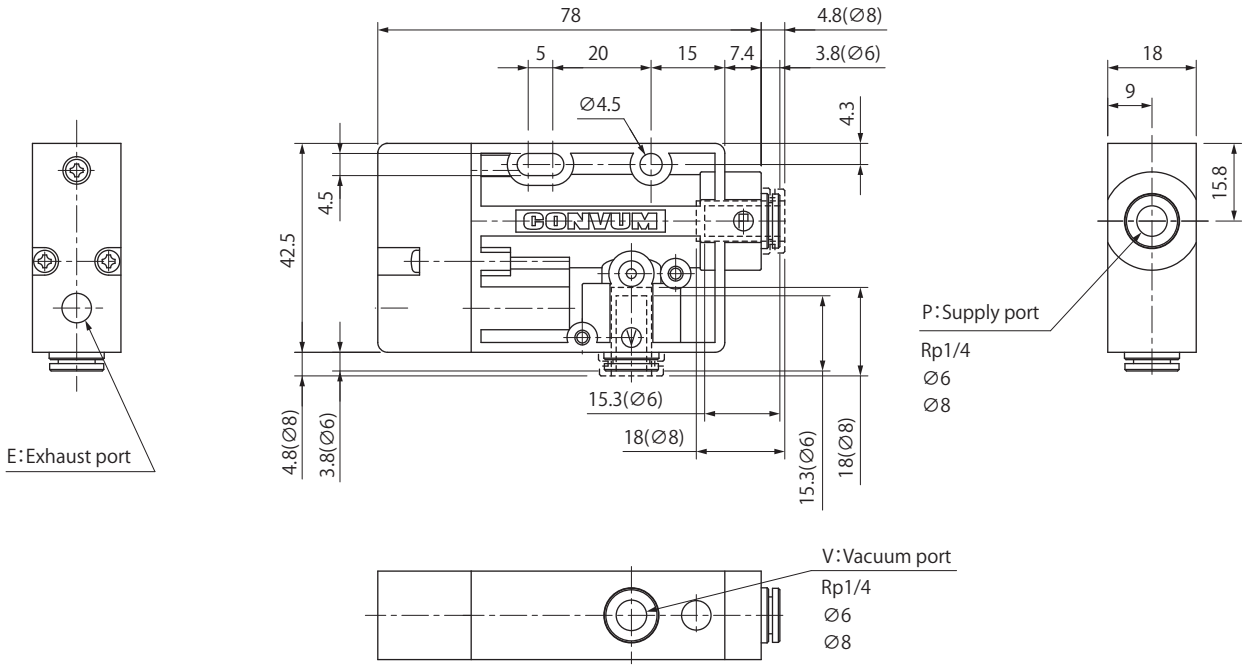

With Switch

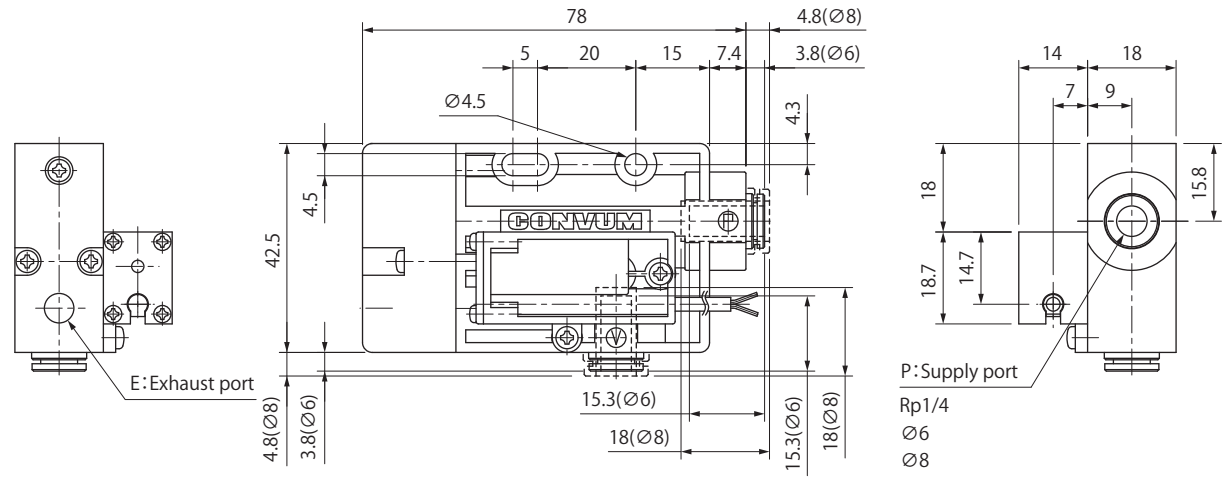

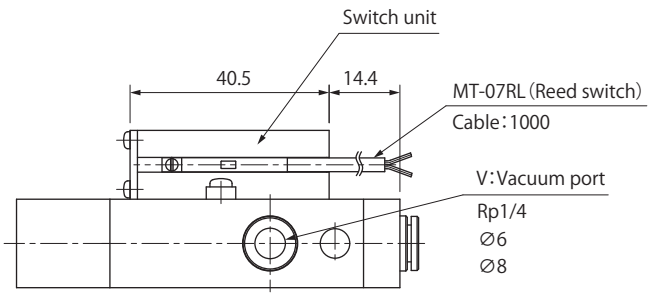

CV Series

Standard CONVUM

01 CONVUM
SC1
SC2
SC3
MC22
MC72
CCV
MCV
CV
CVA2
EC1
MCA
HDV
HFV
CVZ

RoHS

Standard vacuum ejector, extensive line up

- Various size of nozzle, from low to high vacuum flow

SUS type and PTFE type are available

- Body and nozzle made of SUS303/316, PTFE,
  can be used in semiconductor manufacture process

Long life

- No moving parts, simple construction

Prevent the dust from getting into the silencer and supply port

- Dust-proof mesh mounted
  ※ Please refer to silencer / mesh for supply port available list

Mechanical switch can be mounted for aluminum body type

How to Order

Aluminum Type

CV –	05	H	S	CK
	①	②	③	④

① Nozzle Type

Symbol	Nozzle size [mm]
05	0.5
10	1.0
15	1.5
20	2.0
25	2.5
30A	3.0

② Maximum Vacuum Pressure [kPa]

Symbol	Type	Vacuum pressure
H	High vacuum type	-87
L	High flow type	-53

③ Rated pressure [MPa]

S	0.5
R	0.35

④ Switch

Blank	N/A
CK	With

※Switch is not mountable with nozzle type 25 and 30A.

※Switch can not be mounted afterwards.

※①②③④ Applicable Models

①	②	③		④
		S	R	CK
05	H	○	×	○
	L	○	×	
10	H	○	○	○
	L	○	×	
15	H	○	○	○
	L	○	×	
20	H	○	○	○
	L	○	×	
25	H	○	×	×
	L	○	×	
30A	H	○	×	×
	L	○	×	

SUS/PTFE Type

CV –	10	H	S	T	S3
	①	②	③	④	⑤

① NozzleType

Symbol	Nozzle size [mm]
10	1.0
15	1.5
20	2.0

② Maximum Vacuum Pressure [kPa]

Symbol	Type	Vacuum pressure
H	High vacuum type	-87
L	High flow type	-53

③ Rated pressure [MPa]

S	0.5
R	0.35

④ Body Material

Symbol	Material
T	PTFE
S3	SUS303
S6	SUS316

⑤ Nozzle Material

Symbol	Nozzle
S3	SUS303
S6	SUS316

※①②③ Applicable Models

①	②	③	
		S	R
10	H	○	○
	L	○	×
15	H	○	○
	L	○	×
20	H	○	○
	L	○	×

Specifications by Nozzle (common for all material)

Nozzle type	Rated pressure [MPa]	Maximum vacuum pressure [kPa]	Suction flow [L/min(ANR)]	Air consumption [L/min(ANR)]
05HS	0.5	-87	6	13
05LS		-57	9	
10HS		-92	27	44
10LS		-57	36	
10HR	0.35	-91	25	
15HS	0.5	-92	63	100
15LS		-57	95	
15HR	0.35	-91	54	
20HS	0.5	-92	110	180
20LS		-57	155	
20HR	0.35	-91	88	
25HS	0.5	-92	160	265
25LS		-57	250	
30AHS		-92	225	385
30ALS		-57	350	

※ Silencer/ Mesh for Supply Port Available List

Material	Item	Nozzle size					
		05	10	15	20	25	30A
Aluminum	Mesh	○	○	○	×	×	×
	Silencer	○	○	○	○	○	○
SUS	Mesh	-	○	○	×	-	-
	Silencer	-	○	○	○	-	-
PTFE	Mesh	-	○	○	×	-	-
	Silencer	-	○	○	○	-	-

Maintenance Parts

Silencer

Model number	Applicable body
MSS-01	CV-05, 10
MSM-01	CV-15
MSL-02	CV-20
MS6-01	CV-25, 30A

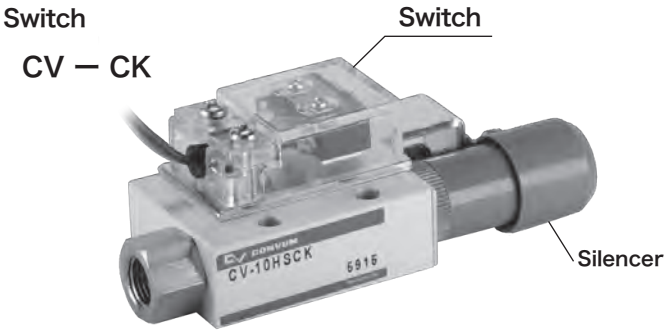

Recommend! These model number below satisfy general needs and functions with product advantages. ※Please feel free to contact us.

Product code	Model number	Specifications	
		Nozzle size (mm)	Switch
200100001	CV-05HS	0.5	N/A
200100002	CV-05LS	0.5	N/A
200100003	CV-10HS	1.0	N/A
200100005	CV-10LS	1.0	N/A
200100006	CV-15HS	1.5	N/A
200100008	CV-15LS	1.5	N/A
200100009	CV-20HS	2.0	N/A
200100011	CV-20LS	2.0	N/A
200100012	CV-25HS	2.5	N/A
200100014	CV-30AHS	3.0	N/A
200100033	CV-05HSCK	0.5	With
200100035	CV-10HSCK	1.0	With
200100038	CV-15HSCK	1.5	With

CONVUM Specifications

Description \ Model number	Unit	CV-05		CV-10			CV-15			CV-20			CV-25		CV-30A	
		HS	LS	HS	LS	HR	HS	LS	HR	HS	LS	HR	HS	LS	HS	LS
Nozzle size	mm	0.5		1.0			1.5			2.0			2.5		3.0	
Fluid		Non-lubricated compressed air														
Ambient temperature	℃	0~60(No Freezing)														
Operating pressure range	MPa	0.1~0.6														
Rated pressure	MPa	0.5				0.35	0.5		0.35	0.5		0.35	0.5			
Maximum vacuum pressure	kPa	-87	-57	-92	-57	-91	-92	-57	-91	-92	-57	-91	-92	-57	-92	-57
Suction flow	L/min(ANR)	6	9	27	36	25	63	95	54	110	155	88	160	250	225	350
Air consumption	L/min(ANR)	13		44			100			180			265		385	

Switch Specifications

Description \ Model number		Unit	CV-CK
Fluid			Air
Operating pressure range		kPa	-20~-53
Withstand pressure		MPa	0.5
Ambient temperature range		℃	0~60 (No freezing)
Ambient humidity range		%RH	35~85 (No condensation)
Switch type			Reed switch, normally opened (N.O)
Rated voltage		V	AC125, 250
Maximum load current	AC125	A	5
	AC250	A	3
Repeatability		kPa	±5.3
Hysteresis		kPa	4.0~13.3
Cable length		mm	100

Silencer Specifications

Description \ Model number	Unit	MSS-01	MSM-01	MSL-02	MS6-01
Fluid		Non-lubricated compressed air			
Ambient temperature range	℃	0~60 (No freezing)			
Operating pressure range	MPa	0~0.5			
Port size		G1/8	G1/4	R1/2	G3/4
Noise reduction	dB	More than 20			
Applicable CONVUM		CV-05,10	CV-15	CV-20	CV-25,30A

Weight (g) CONVUM Body (with silencer, without switch)

Material	Nozzle size					
	05	10	15	20	25	30A
Aluminum	78		139	343	730	870
SUS	-	189	334	793	-	-
PTFE	-	66	116	295	-	-

Pressure Switch (with cable)

Nozzle size	05	10	15	20
Weight	40	40	50	110

Silencer

Model number	Weight
MSS-01	5
MSM-01	7
MSL-02	25
MS6-01	54

Construction

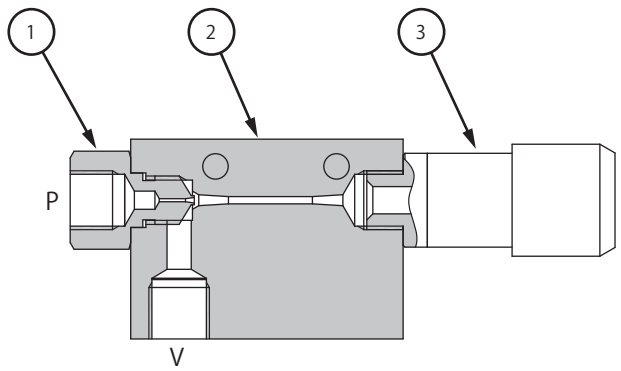

Component Parts

Aluminum Body

No.	Parts name	Material
1	Supply port	Brass
2	Body	Aluminum
3	Silencer	POM, felt

SUS Body

No.	Parts name	Material
1	Supply port	SUS
2	Body	SUS
3	Silencer	POM, felt

PTFE Body

No.	Parts name	Material
1	Supply port	SUS
2	Body	PTFE
3	Silencer	POM, felt

Symbol

Without switch

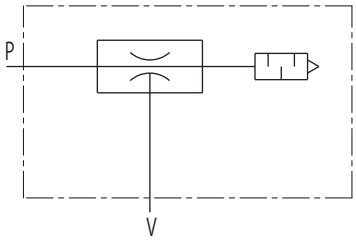

With switch

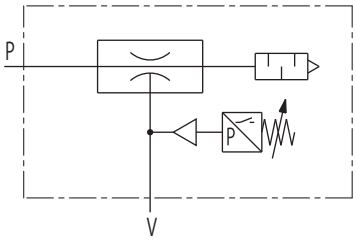

Performance Charts

05HS

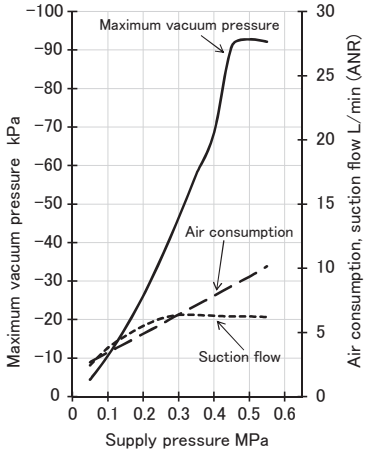

05LS

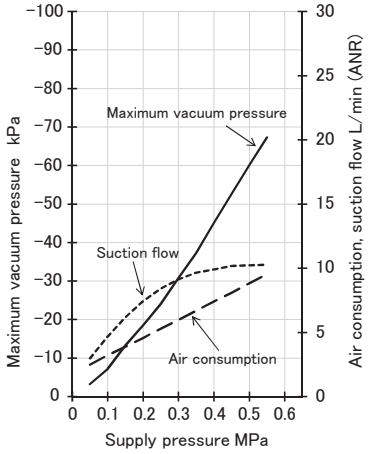

10HS

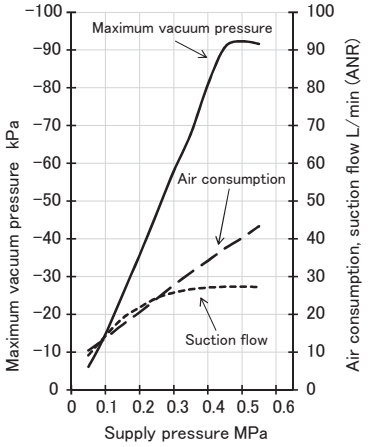

10LS

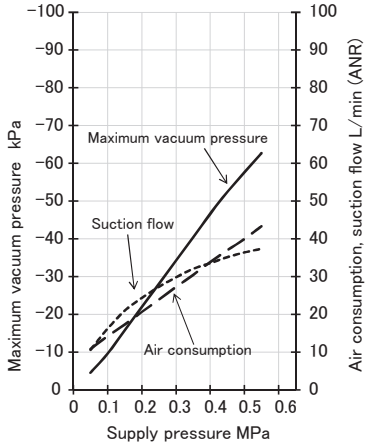

10HR

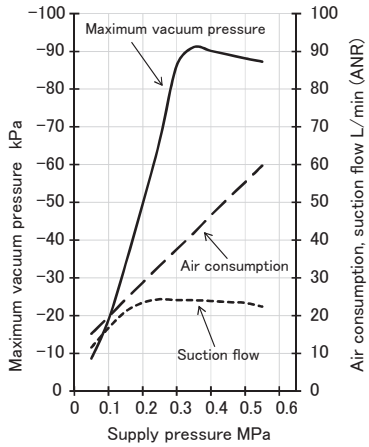

15HS

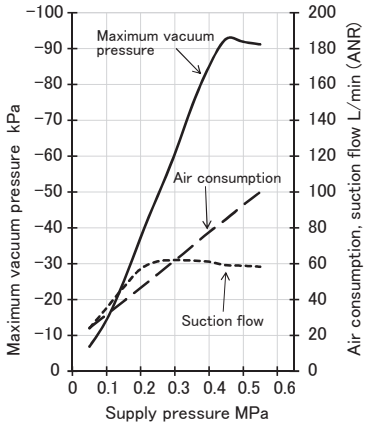

15LS

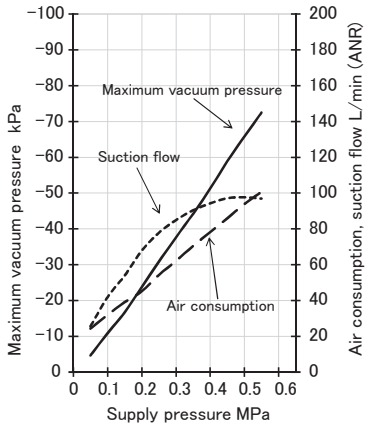

15HR

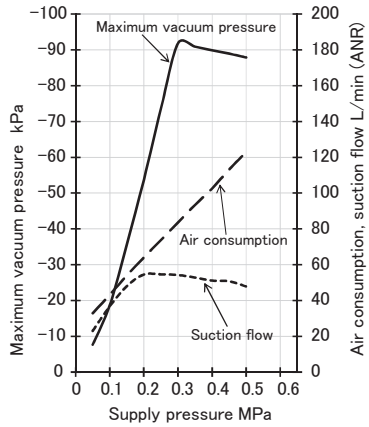

20HS

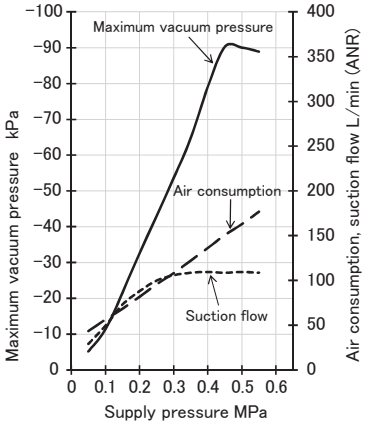

20LS

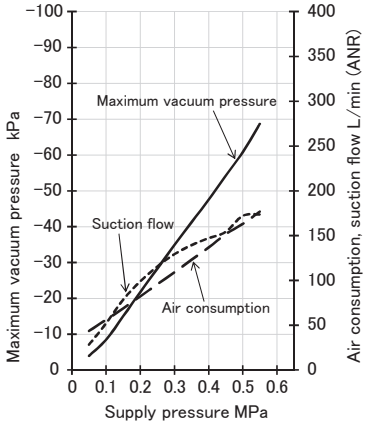

20HR

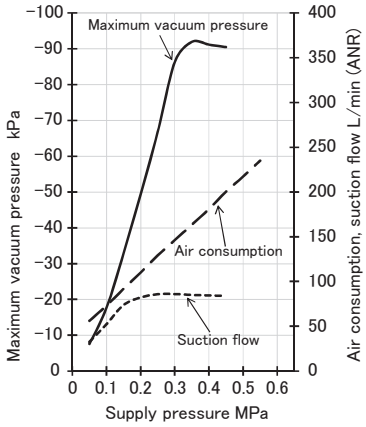

25HS

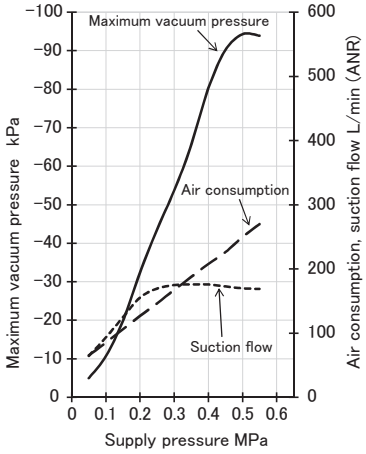

25LS

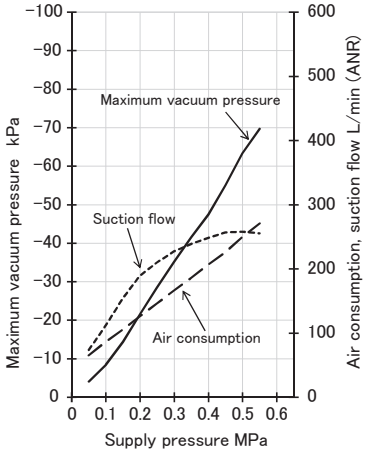

30AHS

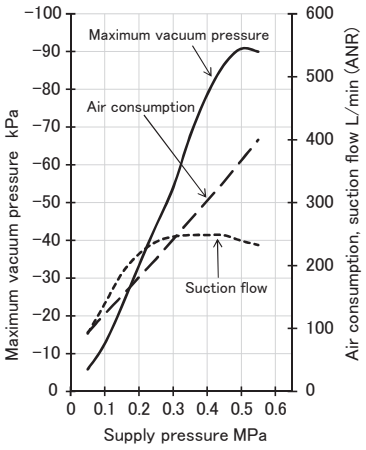

30ALS

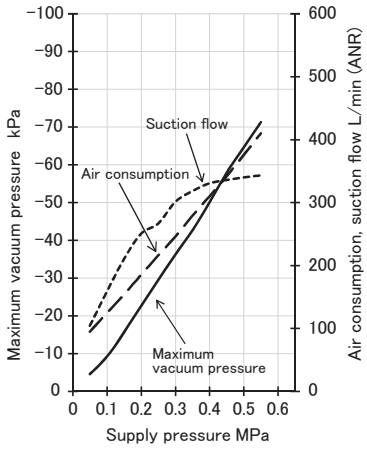

Suction Flow / Vacuum Pressure Characteristics

05HS

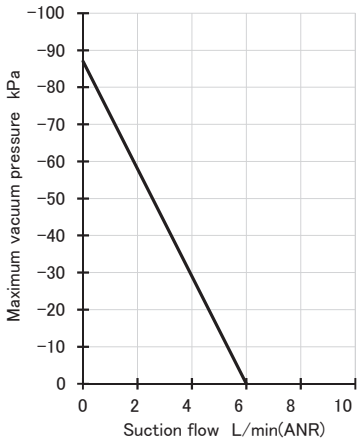

05LS

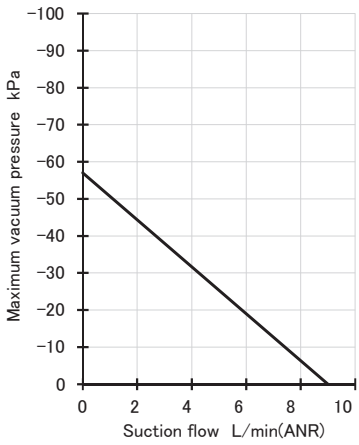

10HS

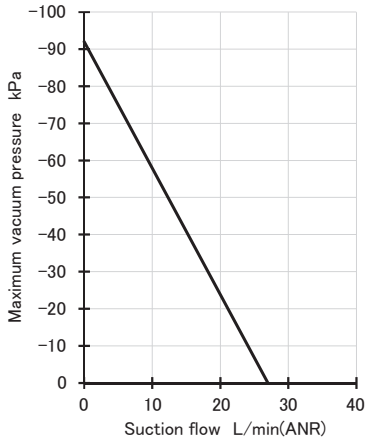

10LS

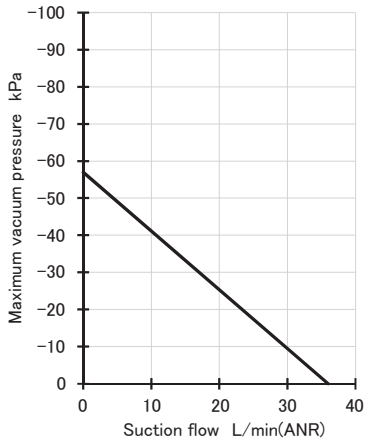

10HR

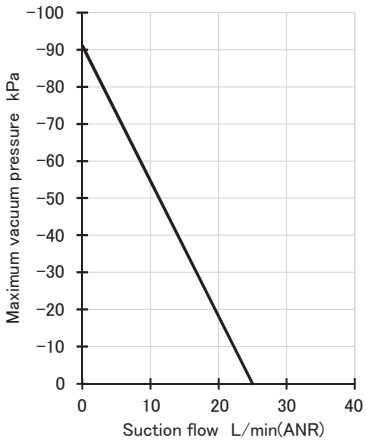

15HS

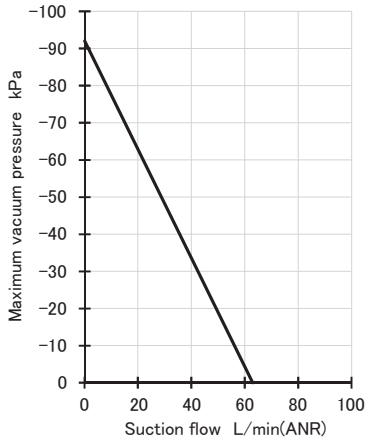

15LS

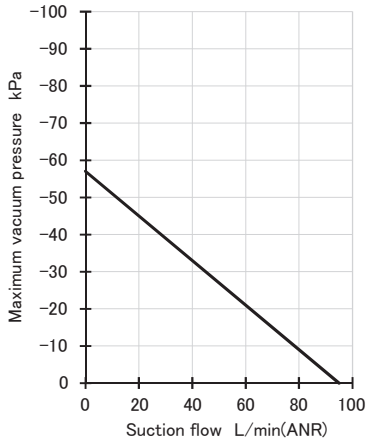

15HR

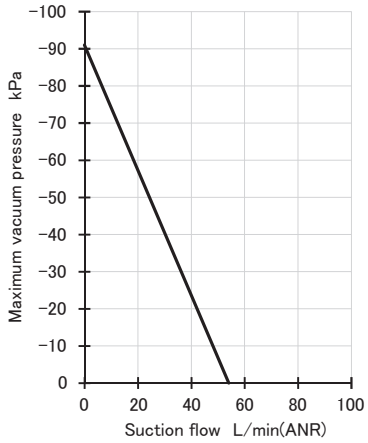

20HS

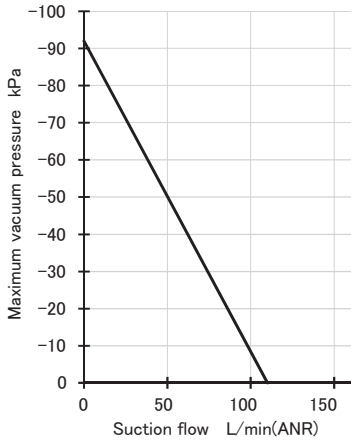

20LS

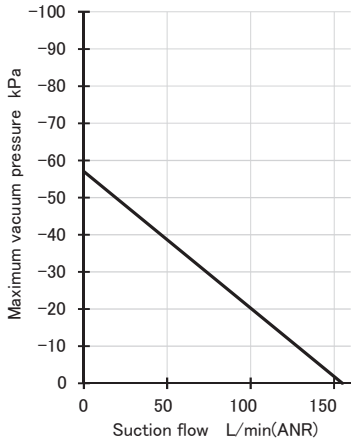

20HR

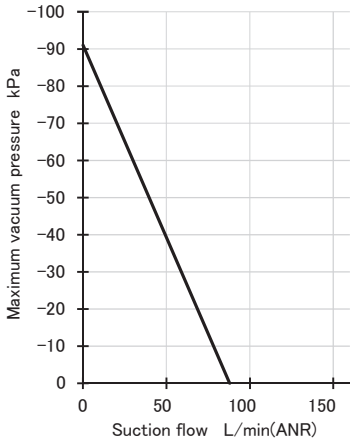

25HS

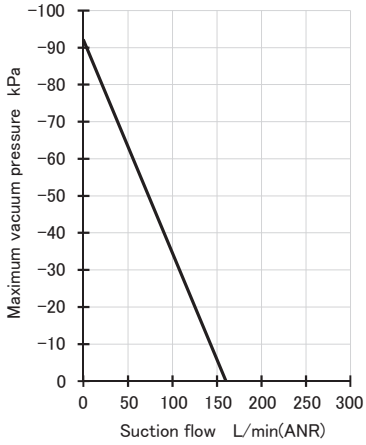

25LS

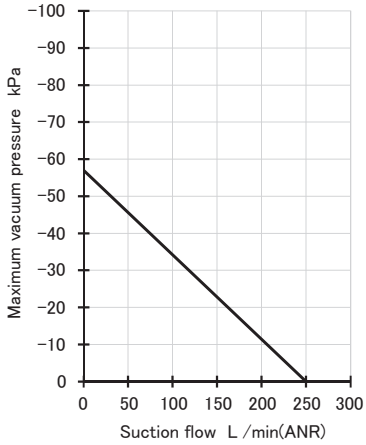

30AHS

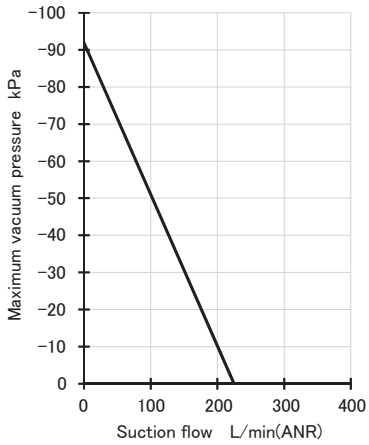

30ALS

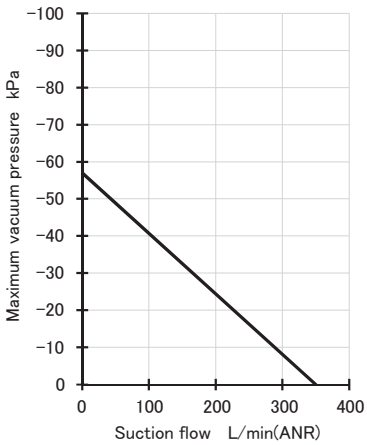

Dimensions

(mm)

CV- □□ Standard (without switch)

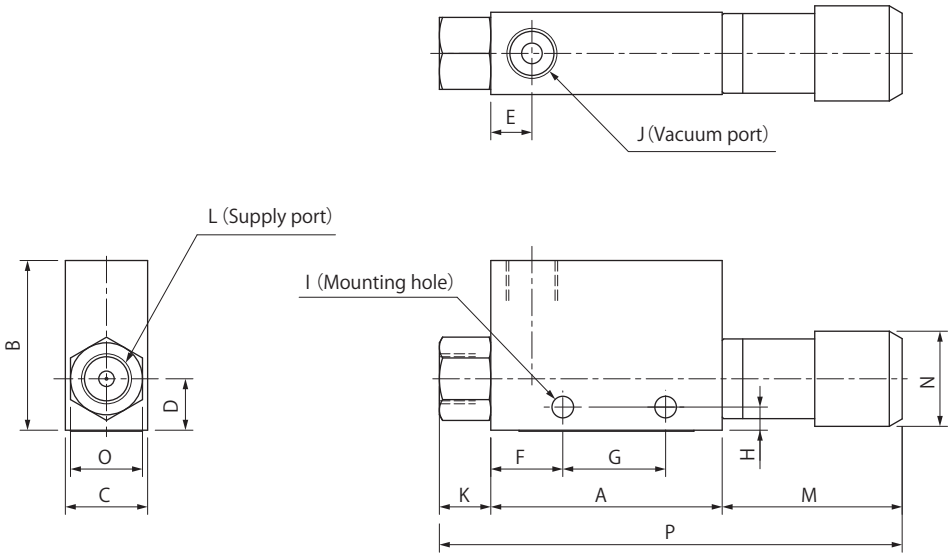

Model number	A	B	C	D	E	F	G	H	I	J	K	L	M	N	O	P	Silencer port screw
CV-05	45	33	16	10	8	14	20	4.5	2-ϕ4.2	Rp1/8	10	Rp1/8	35	ϕ18.5	14	90	Rp1/8
CV-10																	
CV-15	63	35	20	11	10	20	25	5	2-ϕ4.5	Rp1/4	15	Rp1/4	45.5	ϕ20	17	123.5	Rp1/4
CV-20	85	40	30	15	13	28	32	7	2-ϕ6	Rp3/8	20		60.5	ϕ30	24	165.5	Rp1/2
CV-25	100	60	40	20	16	20	50	5.5		Rc1/2	17	Rc3/8	96	ϕ40	28	213	Rp3/4
CV-30A	118				20	33				Rc3/4	20	Rc1/2			30	234	

CV- □□ CK(with switch)

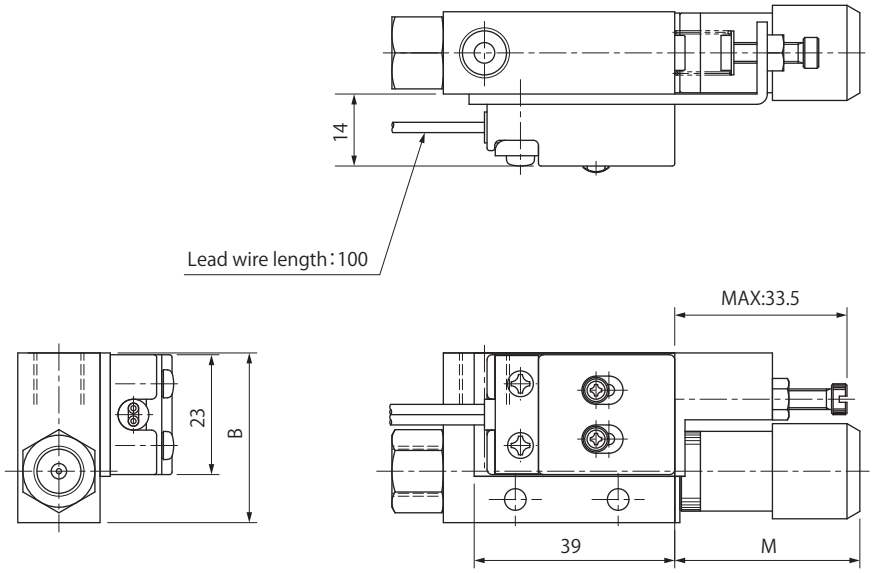

Model number	M	B
CV-05	36	33
CV-10		
CV-15	46.5	35
CV-20	60.5	50

CVA2 Series

Modular Type CONVUM

RoHS

Popular unit type CONVUM

- Aluminum body
- Long life
- Simple construction
- Long-seller

Flexible combinations are selectable

Customizable

- Free selection of CONVUM body, pressure sensor, blow-off valve
- Pressure sensor, blow-off valve can be mounted afterwards
- Silencer is standard mounted

How to Order

CVA2 –	05	H	S	AB	DN	4	B	L
	①	②	③	④	⑤	⑥	⑦	⑧

① NozzleType

Symbol	Nozzle size [mm]
05	0.5
10	1.0
15	1.5

② Maximum Vacuum Pressure[kPa]

Symbol	Type	Vacuum pressure
H	High vacuum type	-87
L	High flow type	-53
Q		-46

③ Rated Pressure [MPa]

S	0.5
R	0.35

※①②③ Applicable Models

①	②	③ S	③ R
05	H	○	×
	L	○	×
	Q	×	×
10	H	○	○
	L	○	×
	Q	○	○
15	H	○	○
	L	○	×
	Q	○	○

Specifications by Nozzle

Nozzle type	Rated pressure [MPa]	Maximum vacuum pressure [kPa]	Suction flow [L/min (ANR)]	Air consumption [L/min (ANR)]
05HS	0.5	-87	6	13
05LS		-57	9	
10HS		-92	27	44
10LS		-57	36	
10QS		-47	54	
10HR	0.35	-91	25	
10QR		-47	50	
15HS	0.5	-92	63	100
15LS		-57	95	
15QS		-47	136	
15HR	0.35	-91	54	
15QR		-47	123	

④ Pressure Sensor

Symbol	Sensor type	Pressure range [kPa]	Display	Switch output	Analog output
AB	MVS-030AB	-101～0	LED	NPN 1 point	N/A
V	CVA-V	-73.2～-33.3	N/A	Reed switch 1 point	N/A
Blank	Without sensor				

※Please consult with us for PNP output type.

⑤ Blow-off valve

Symbol	Specifications
Blank	N/A
DN	Blow-off flow adjustable

⑥ Valve Voltage [V]

Symbol	Voltage
4	DC24
100	AC100
200	AC200

⑦ Vacuum Generation Valve Type

A	Normally opened
B	Normally closed

⑧ Valve Connection

L	Lead wire with connector (with lamp and surge killer)
D	DIN type Note1 (with lamp, without lead wire)

※Note1) AC100, AC200 only.

Recommend! These model number below satisfy general needs and functions with product advantages. ※Please feel free to contact us.

Product code	Model number	Specifications			
		Nozzle size (mm)	Pressure sensor	Blow-off valve	Vacuum generation valve type
202500013	CVA2-05HS4BL	0.5	N/A	N/A	Normally closed
202500015	CVA2-10HS4BL	1.0	N/A	N/A	Normally closed
202500020	CVA2-15HS4BL	1.5	N/A	N/A	Normally closed
202500058	CVA2-05HSABDN4BL	0.5	Electronic pressure sensor	With	Normally closed
202500064	CVA2-10HSABDN4BL	1.0	Electronic pressure sensor	With	Normally closed
202500087	CVA2-15HSABDN4BL	1.5	Electronic pressure sensor	With	Normally closed

Maintenance Parts

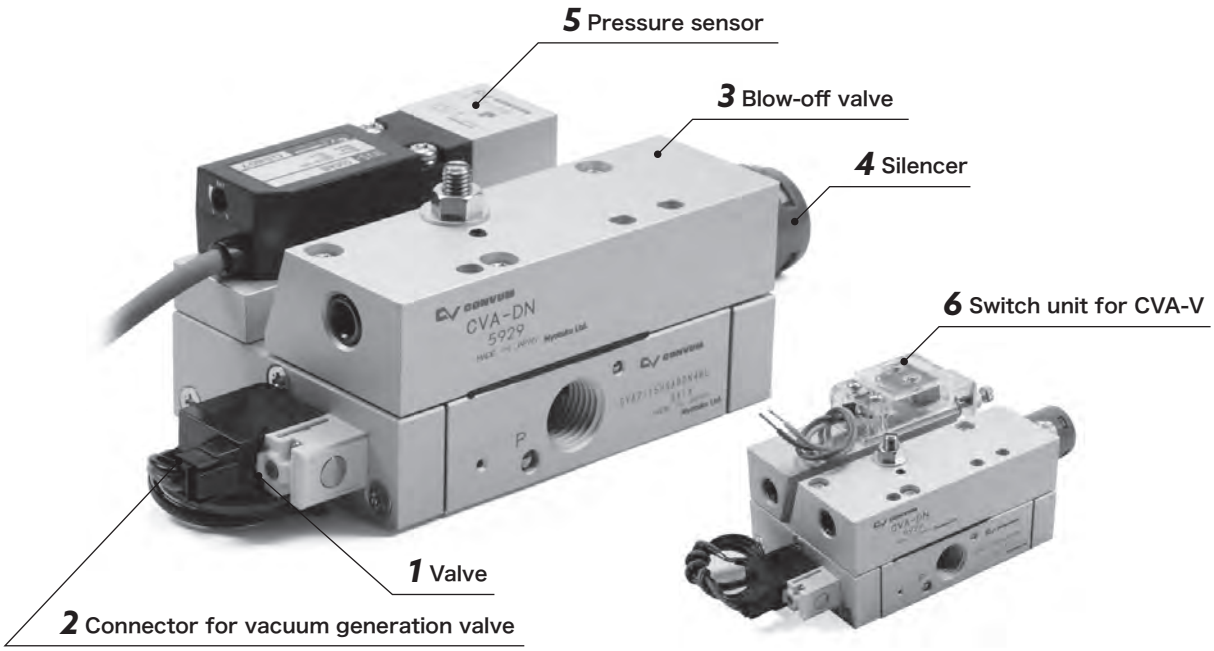

1 Valve

・DC24V

CKV010-4E For vacuum generation	
※ Lead wire length 300mm ※ Gasket and mounting screw are included	

・AC100V, AC200V

CVA — 100 L

100	AC100
200	AC200

L	Lead wire with connector (with lamp and surge killer)
D	DIN type (with lamp, without lead wire)

2 Connector for Vacuum Generation Valve (CKV010-4E)
※With lead wire

CA2 — V4 — 6

Lead wire length (mm)

Blank	300
6	600
10	1000
20	2000
30	3000

3 Blow-off Valve

Model number	Specifications
CVA-DN	Blow-off flow adjustable

4 Silencer

Model number	Applicable body
MSS-01	CVA2-05, 10H/L
MSS-03	CVA2-10Q
MSM-01	CVA2-15H/L
MSM-02	CVA2-15Q

5 Pressure Sensor

Model number
MVS-030AB-CVA
CVA-V

6 Switch Unit for CVA-V

CV — CK

CONVUM Specifications

Description \ Model number	Unit	CVA2-05		CVA2-10					CVA2-15				
		HS	LS	HS	LS	QS	HR	QR	HS	LS	QS	HR	QR
Nozzle size	mm	0.5		1.0					1.5				
Fluid		Non-lubricated compressed air											
Ambient temperature	℃	0~60(No Freezing)											
Operating pressure range	MPa	0.2~0.6											
Vacuum generation valve type		Normally opened (A)・normally closed(B)											
Rated pressure	MPa	0.5					0.35		0.5			0.35	
Maximum vacuum pressure	kPa	-87	-57	-92	-57	-47	-91	-47	-92	-57	-47	-91	-47
Suction flow	L/min(ANR)	6	9	27	36	54	25	50	63	95	136	54	123
Air consumption	L/min(ANR)	13		44					100				

Blow-off valve specifications

Description \ Model number	Unit	CVA-DN
Fluid		Non-lubricated compressed air
Operating pressure range	MPa	0.3~0.6
Blow-off time	S	0.3~3 Note1
Ambient temperature	℃	0~60 Note2
Blow-off flow	L/min (ANR)	MAX.50
Weight	g	140

Note1) In case of 0.5 Mpa supply pressure.
Note2) Under 5℃, there is a risk of freezing, please use an air dryer to prevent it.

Valve Specifications

Description \ Model number	Unit	CKV010-4E	CVA-100L/D	CVA-200L/D
Valve structures		3 port, direct operated poppet valve	3 port, pilot poppet valve	
Rated voltage	V	DC24	AC100	AC200
Allowable voltage fluctuation	%	±10		
Frequency	Hz	-	50/60	
Power consumption (current value)	W(mA)	1(42)	2.0(20)/1.6(16)	2.3(12)/1.8(9)
Insulation type		Class B		
Manual override operation		Non-lock		
Display / Surge killer		LED/diode	L:with lamp and surge killer/D:with lamp	
Lead wire		Lead wire with connector (300mm)	L:lead wire 300mm/D:without lead wire	
Weight (with lead wire)	g	15.3	53	52

Pressure Sensor Specifications

Description \ Model number		Unit	MVS-030AB-CVA	CVA-V
Fluid			Air (vacuum), Non-corrosive gas, Non-flammable gas	
Diaphragm			Silicon diaphragm	-
Rated pressure range		kPa	-101～0	-
Setting pressure range		kPa	-101.2～-2.7	-73.2～-33.3
Withstand pressure		MPa	0.5	
Ambient temperature range		℃	0~50 (No freezing)	0~60 (No freezing)
Ambient humidity range		%RH	35~85(No condensation)	
Power supply voltage		V	DC12~24±10%, ripple (Vp-p)10% or less	AC125, 250
Current consumption		mA	20	-
Switch type			-	Reed switch, normally opened
Switch output	Type		NPN open collector 1 output	-
	Maximum load current	mA	80	AC125:5, AC250:3
Repeatability		%	±3F.S.	-
Response time		ms	2 or less	-
Display			Red color LED (ON lighting)	-
IP class			IP40	
Cable			Grommet	Grommet
Cable specifications			Φ4 3 lead wires X0.15mm 2m	100mm

Weight (g)

24V Valve (lead wire with connector)

Specifications			
Nozzle size	Sensor	Blow-off valve(DN)	
		with	N/A
05.10 type	N/A	388	224
	With MVS-030AB	491	328
	With CVA-V	522	358
15 type	N/A	435	271
	With MVS-030AB	538	375
	With CVA-V	569	405

100V, 200V Valve (lead wire with connector)

Specifications			
Nozzle size	Sensor	Blow-off valve(DN)	
		with	N/A
05.10 type	N/A	425	261
	With MVS-030AB	528	364
	With CVA-V	559	395
15 type	N/A	472	308
	With MVS-030AB	575	411
	With CVA-V	606	442

100V, 200V DIN Type Valve

Specifications			
Nozzle size	Sensor	Blow-off valve(DN)	
		with	N/A
05.10 type	N/A	428	264
	With MVS-030AB	531	367
	With CVA-V	562	398
15 type	N/A	475	311
	With MVS-030AB	578	414
	With CVA-V	609	445

Construction

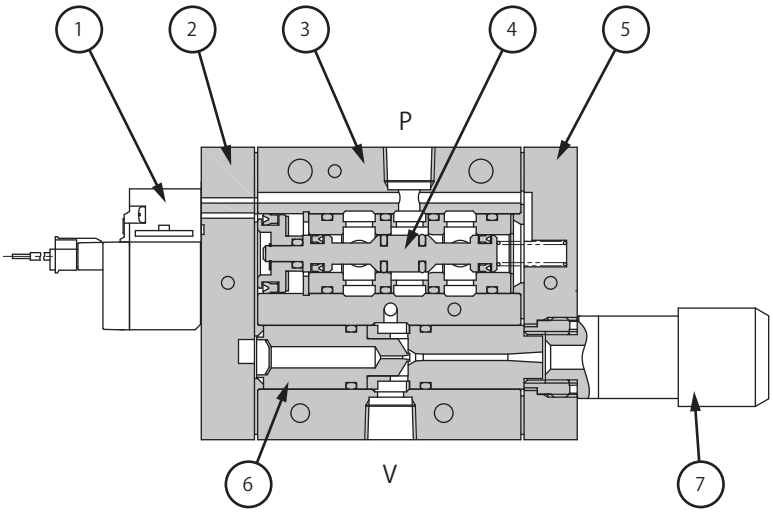

Component Parts

No.	Parts name	Material
1	Vacuum generation valve	-
2	Lateral plate A	Aluminum, NBR
3	CVA2 body	Aluminum
4	Spool Assy's	-
5	Lateral plate B	Brass, aluminum, NBR
6	Nozzle Assy's	Brass, aluminum, NBR
7	Silence	POM, felt

Symbol

Without Sensor, Blow-off Valve

Normally Opened

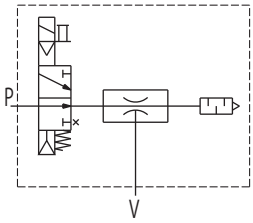

Normally Closed

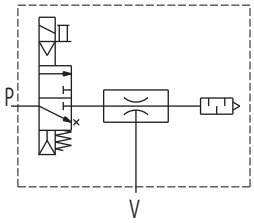

With Blow-off Valve

Normally Opened

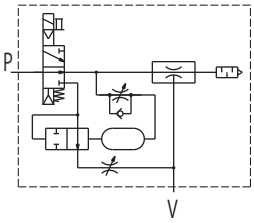

Normally Closed

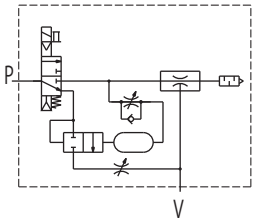

With Sensor

Normally Opened

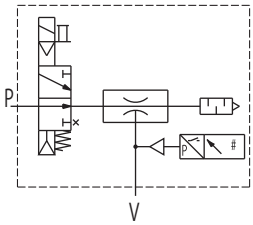

Normally Closed

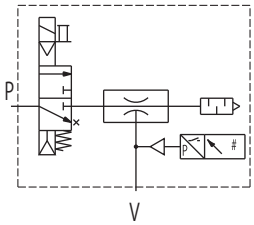

With Sensor, Blow-off Valve

Normally Opened

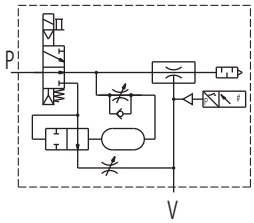

Normally Closed

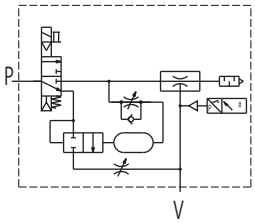

Performance Charts

05HS

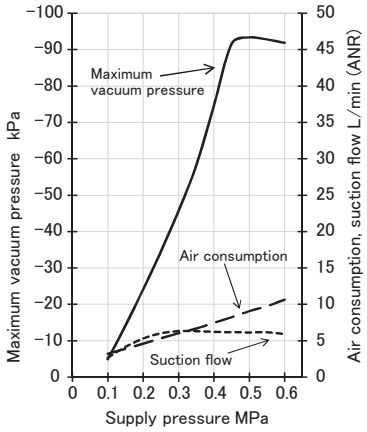

05LS

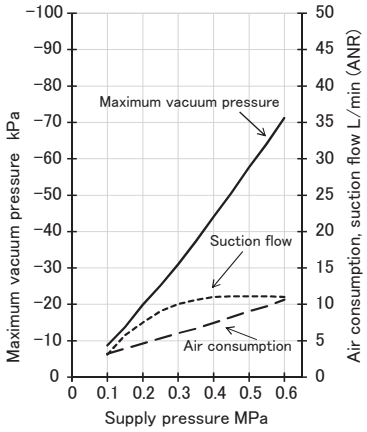

10HS

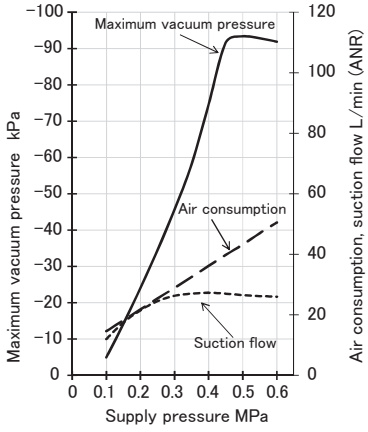

10LS

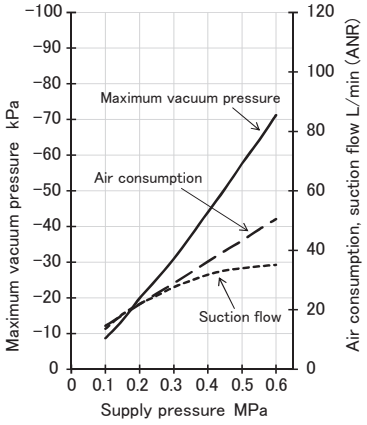

10QS

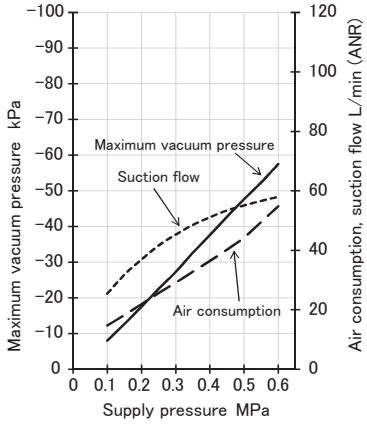

10HR

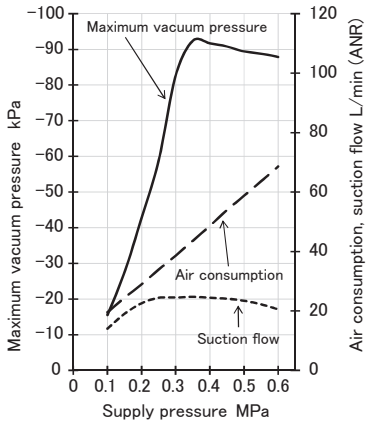

10QR

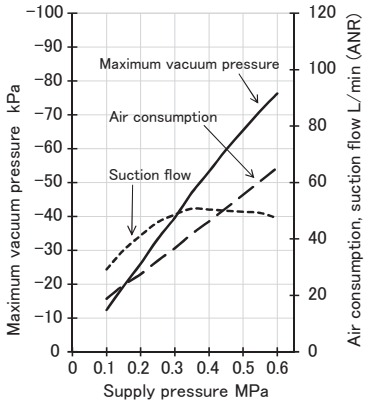

15HS

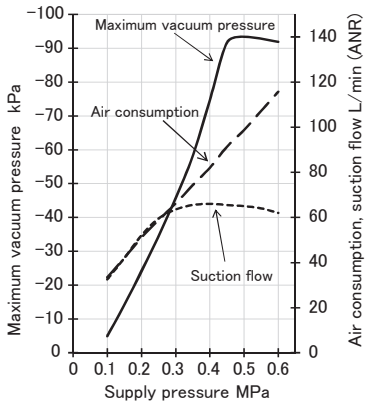

15LS

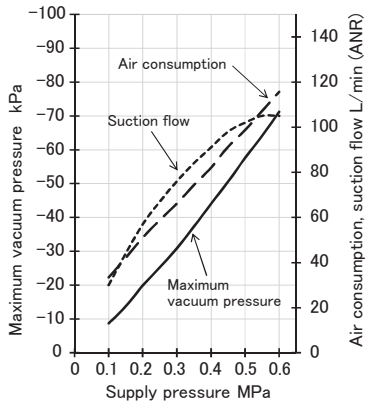

15QS

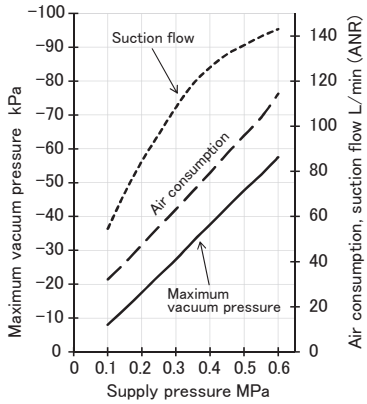

15HR

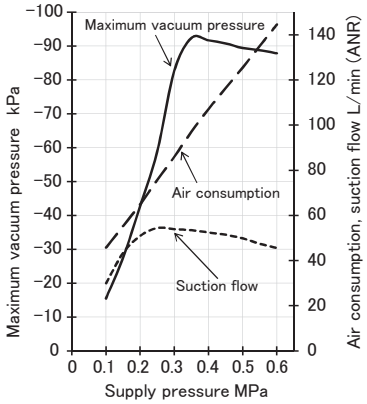

15QR

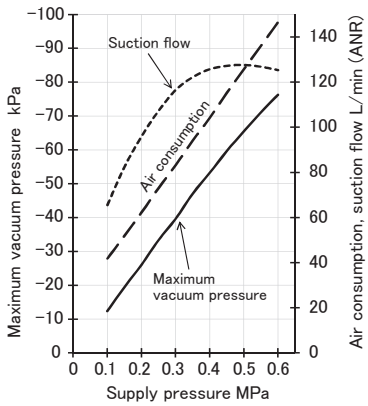

Suction Flow / Vacuum Pressure Characteristics

05HS

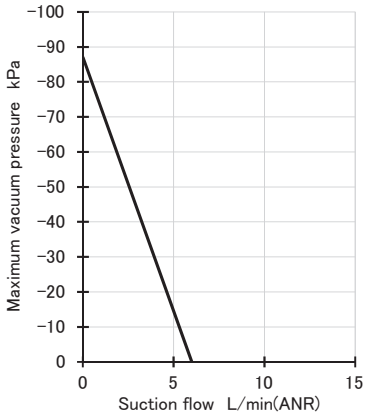

05LS

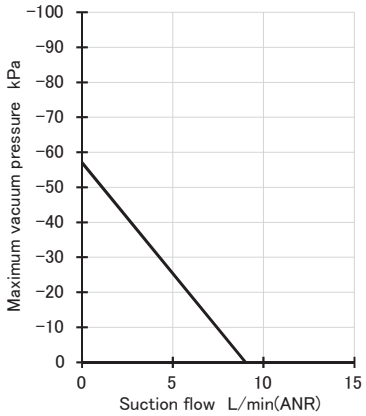

10HS

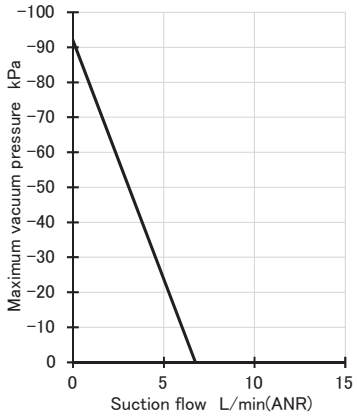

10LS

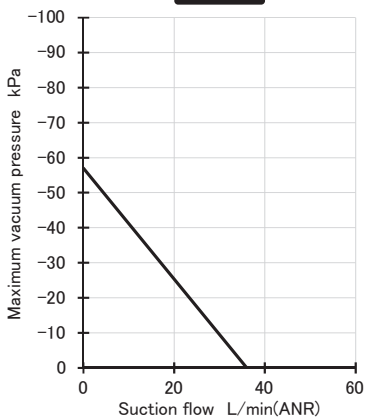

10QS

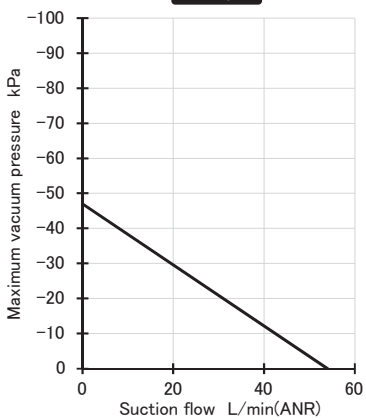

10HR

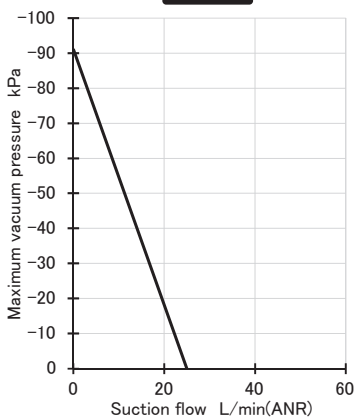

10QR

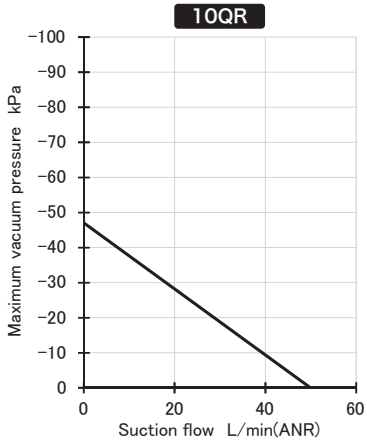

15HS

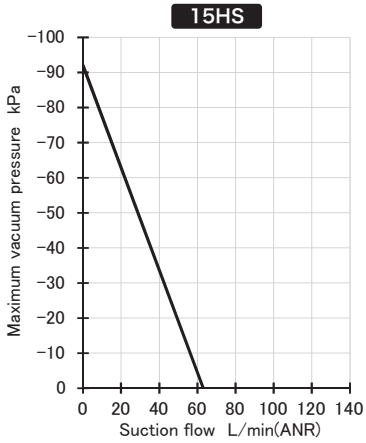

15LS

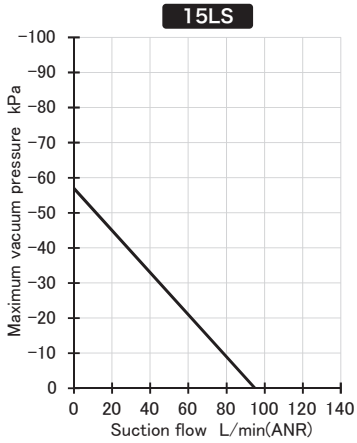

15QS

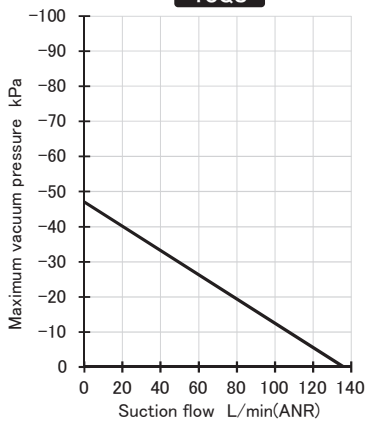

15HR

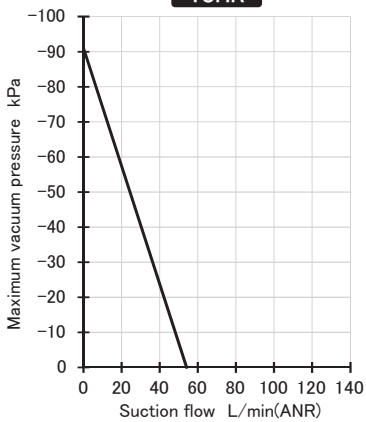

15QR

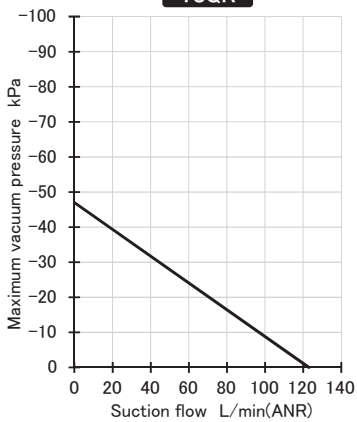

Dimensions

CVA2-05,10

Without Sensor, Switch, Blow-off Valve

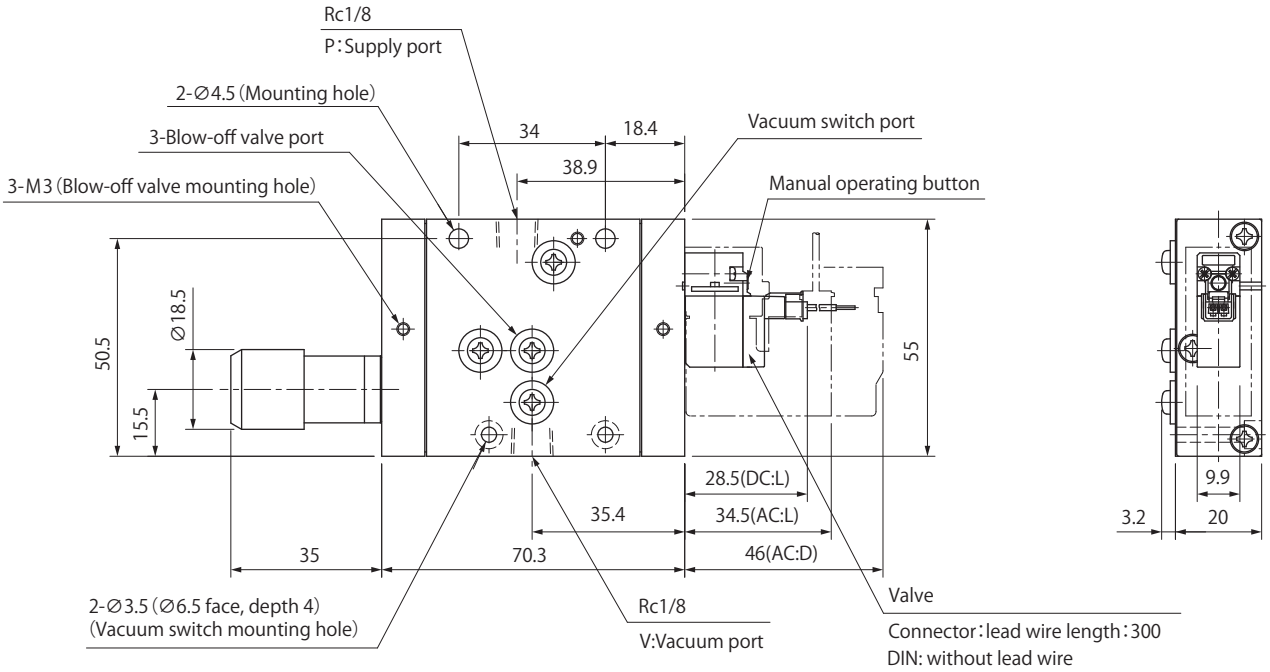

With Blow-off Valve (CVA-DN)

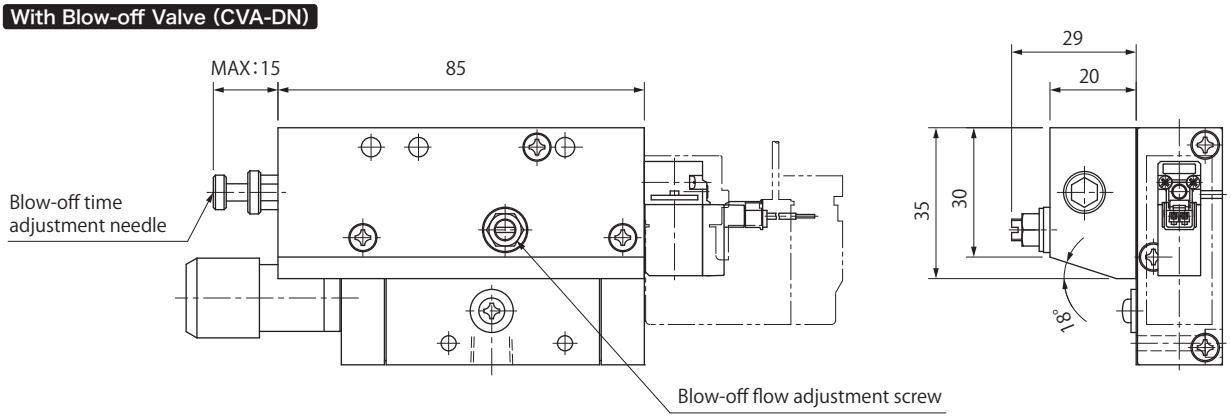

With Sensor (MVS-030AB-CVA)

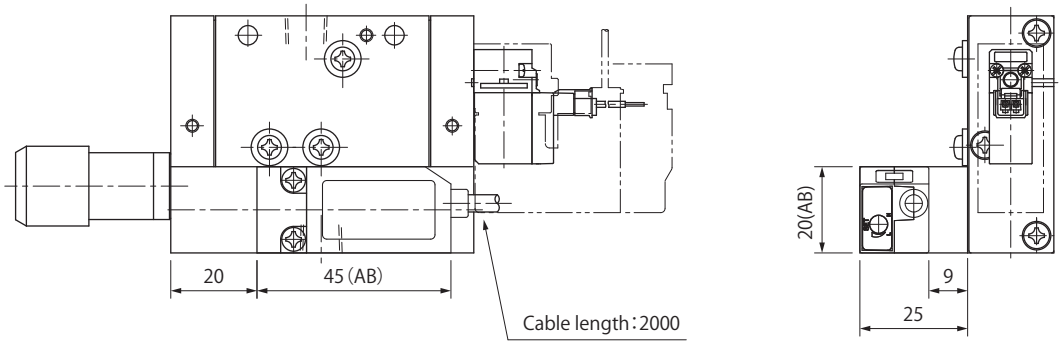

(mm)

With Switch (CVA-V)

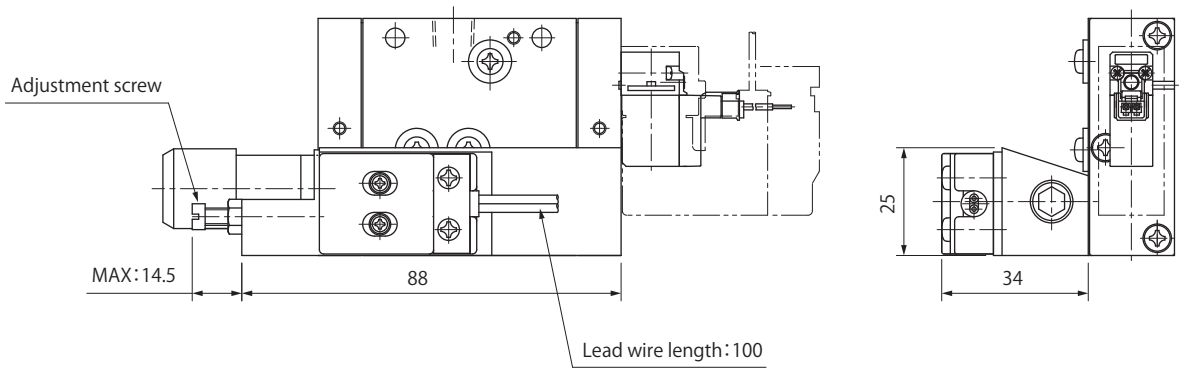

With Switch (CVA-V), Blow-off Valve (CVA-DN)

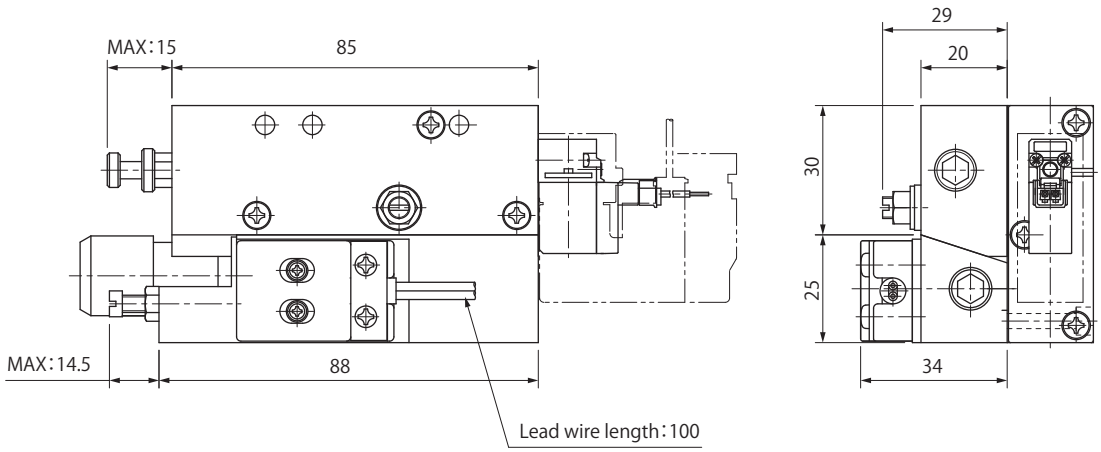

With Sensor (MVS-030AB-CVA) ,Blow-off Valve (CVA-DN)

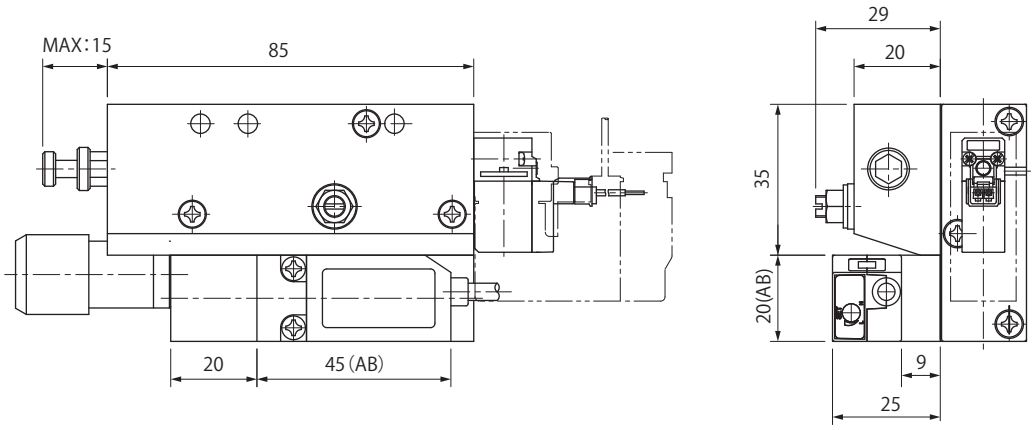

Dimensions

CVA2-15

Without Sensor, Switch, Blow-off Valve

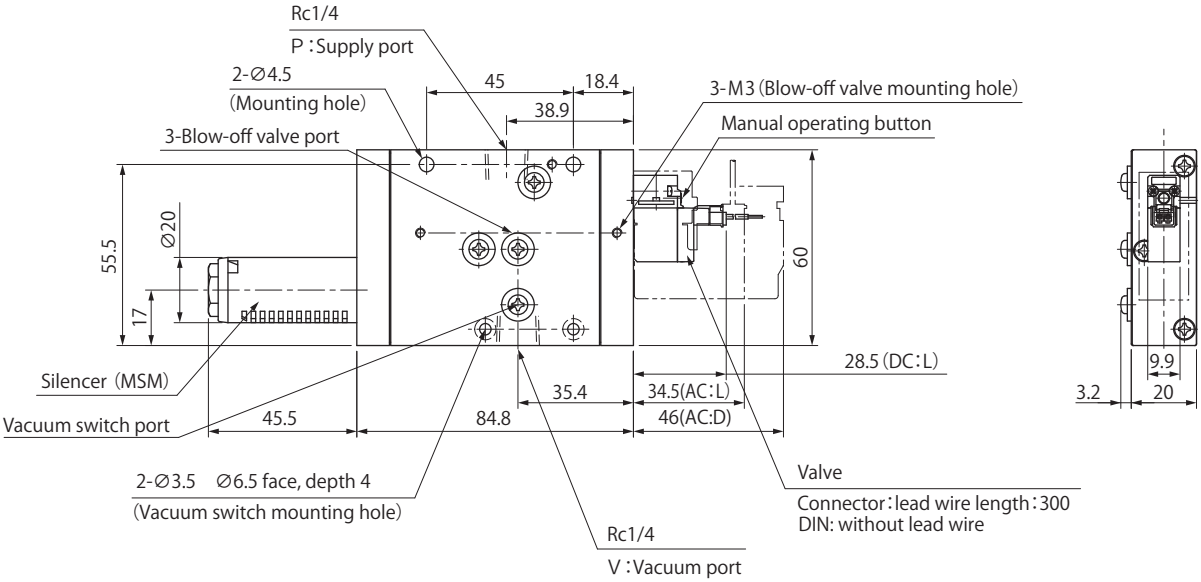

With Blow-off Valve (CVA-DN)

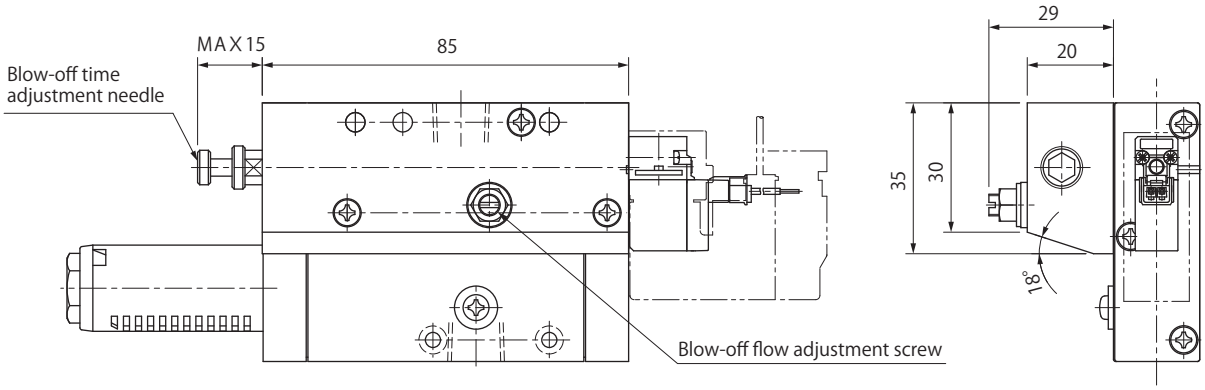

With Sensor (MVS-030AB-CVA)

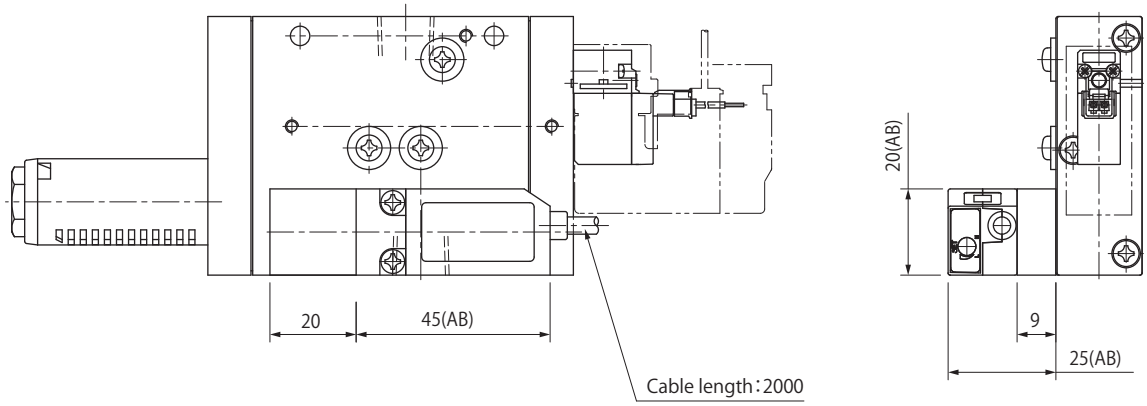

(mm)

With Switch (CVA-V)

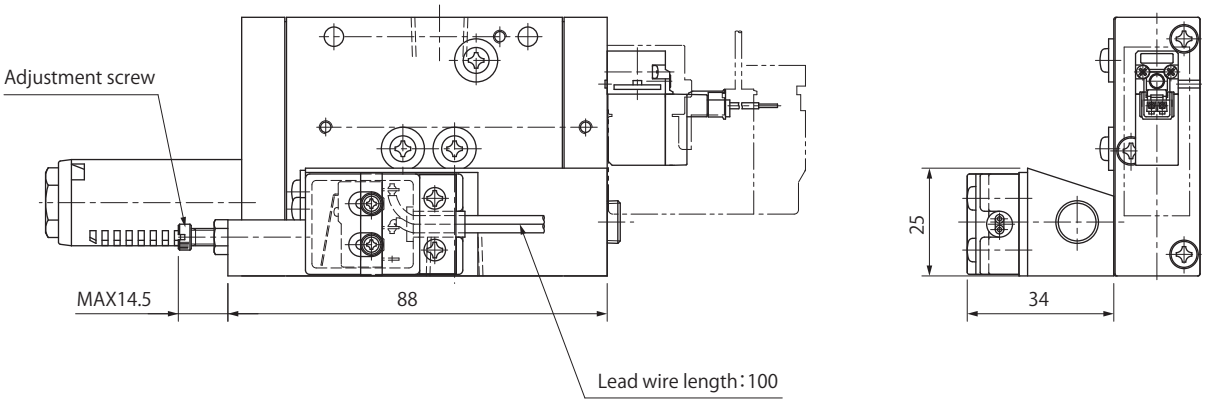

With Switch (CVA-V), Blow-off Valve (CVA-DN)

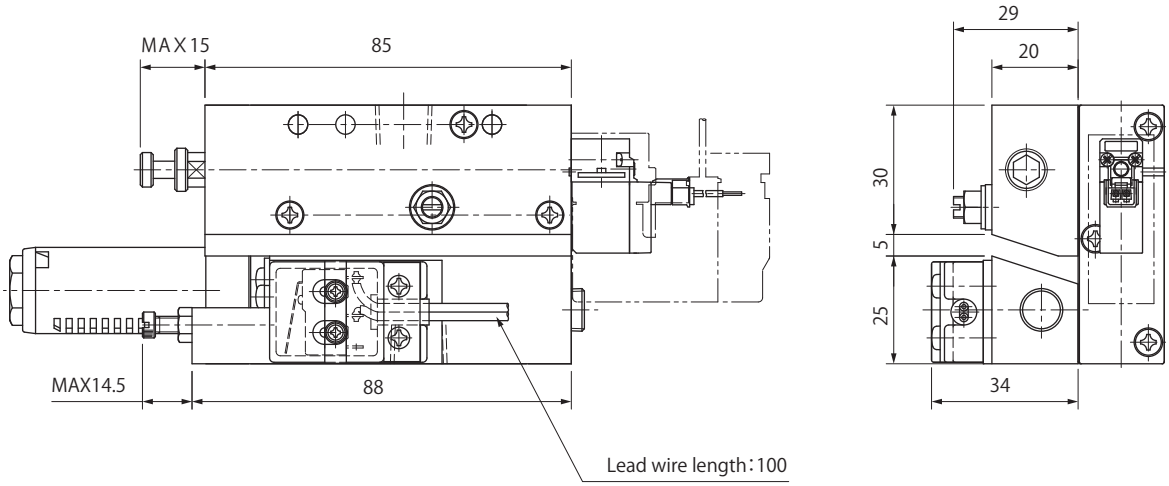

With Sensor (MVS-030AB-CVA), Blow-off Valve (CVA-DN

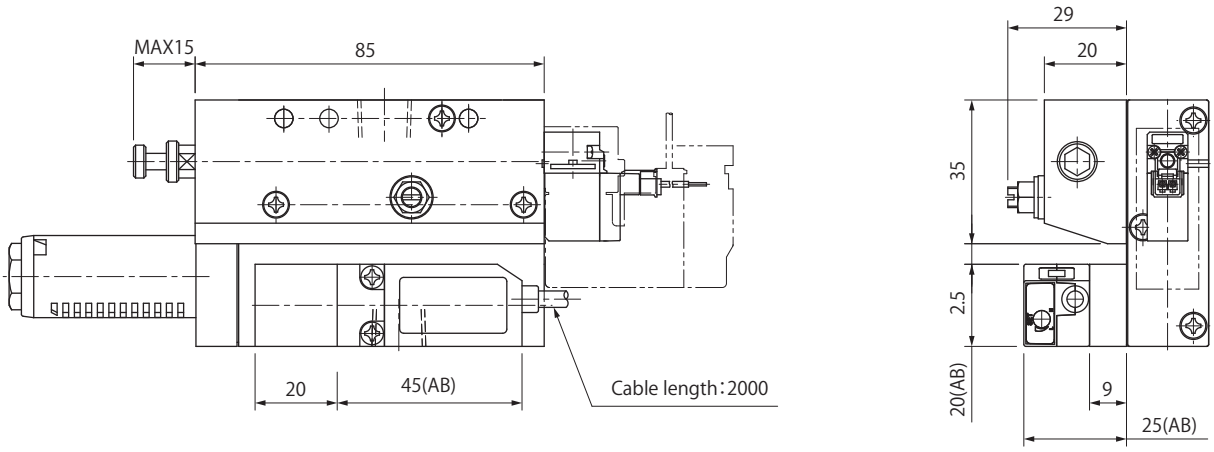

EC1 Series

Energy-saving Mechanical CONVUM

RoHS

Reduces air consumption when adsorbing workpiece

Mechanism	EC1 is equipped with energy saving system that does not use electric control. Vacuum is generated when compressed air is supplied. When reaching the set vacuum pressure, vacuum generating will be automatically stopped. In case of workpiece which does not have vacuum leakage, vacuum will be retained by check valve inside. When vacuum is getting lower, vacuum is automatically generated again to prevent the pressure reduction. This operation is continued until compressed air is cut off.

With blow-off air tank

- When supplied air is stopped, compressed air in the tank is blown out from vacuum port and vacuum break is mechanically done.

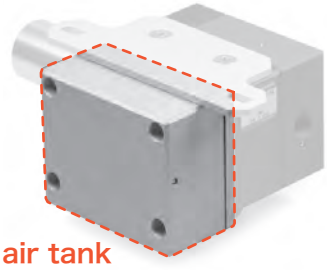

Mountable to suction cup directly

- Suction cup is mountable to EC1 directly.

Recommend suction cup	PK2 (P.367) · PK2B (P.373) series

How to Order

EC1 – 10X – Z – 14

① ② ③

① Nozzle Type

Symbol	Nozzle size [mm]	Nozzle type
07X	0.7	Multi-stage
10X	1.0	
13S	1.3	Single

② Blow-off Air Tank

Symbol	Tank
T	With
Z	N/A

③ Screw Size of Vacuum Port (port to connect the suction cup)

Symbol	Screw type
14	Rc1/4
1F	M10 female screw (M10×P1.5, coarse screw)
1M	M10 female screw (M10×P1.25, fine screw)
2F	M12 female screw (M10×P1.75, coarse screw)

Maintenance Parts

Model number	Specifications
EC1-FE	Filter element (metal mesh)

Model number	Specifications
EC1-VP-14	Vacuum port : Rc1/4 Adapter, metal mesh, screw

Model number	Specifications
EC1-VP-1F	Vacuum port : M10 female screw (M10×P1.5) Adapter, metal mesh, screw

Model number	Specifications
EC1-VP-1M	Vacuum port : M10 female screw (M10×P1.25) Adapter, metal mesh, screw

Model number	Specifications
EC1-VP-2F	Vacuum port : M12 female screw (M12×P1.75) Adapter, metal mesh, screw

CONVUM Specifications

Description ＼ Model number		Unit	07X	10X	13S
Nozzle type			Multi-stage		Single
Nozzle size		mm	0.7	1.0	1.3
Fluid			Non-lubricated compressed air		
Ambient temperature		℃	0～50(No Freezing)		
Operating pressure range		MPa	0.45～0.6		
Rated pressure		MPa	0.5(at vacuum generation)		
Maximum vacuum pressure		kPa	−88		
Suction flow		L/min (ANR)	37	39	38
Air consumption		L/min (ANR)	30	52	82
Hysteresis		kPa	About 10-30 (depends on the adjust position)		
Capacity of tank		cc	14.5		
Energy-saving ON-OFF value (in round figures)			65～85(ON-OFF position adjustable)		
Weight	With tank	g	520		
	Without tank		410		

Construction

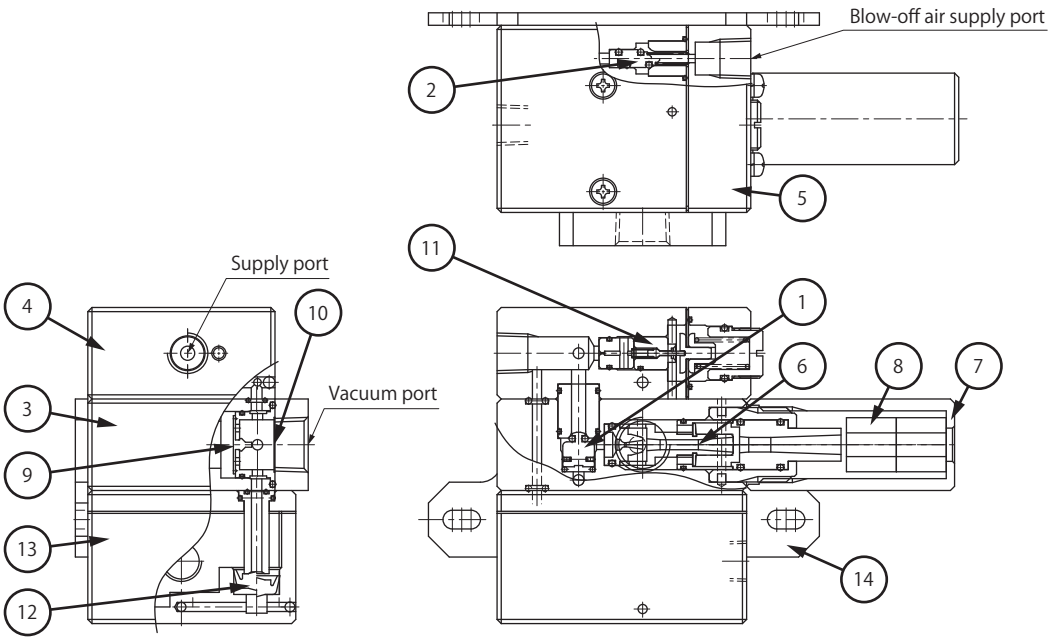

Component Parts

No.	Parts name	Material
1	Vacuum generation poppet	Aluminum, NBR
2	Blow-off poppet	SUS, NBR
3	Body 1	Aluminum, NBR, iron
4	Body 2	Aluminum, NBR, iron
5	Body 3	Aluminum, NBR, iron
6	Nozzle kit	Aluminum, PA, NBR, FKM
7	Silencer	Aluminum
8	Silencer element	Needle felting
9	Check valve	Aluminum, NBR
10	Filter	SUS, aluminum, NBR
11	Energy-saving function	SUS, aluminum, NBR, iron
12	Shuttle valve	Aluminum, NBR
13	Tank	Aluminum, NBR, iron
14	Mounting plate	Aluminum, iron

Dimensions

(mm)

With tank

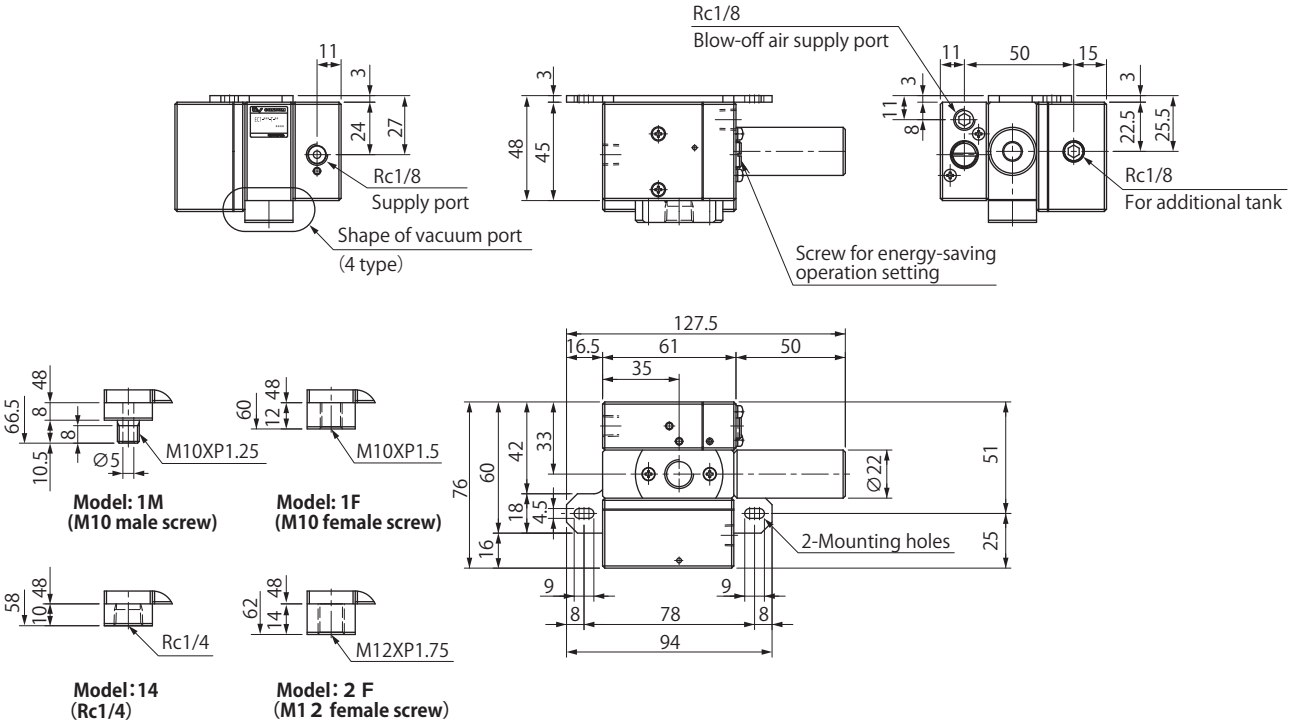

Without tank

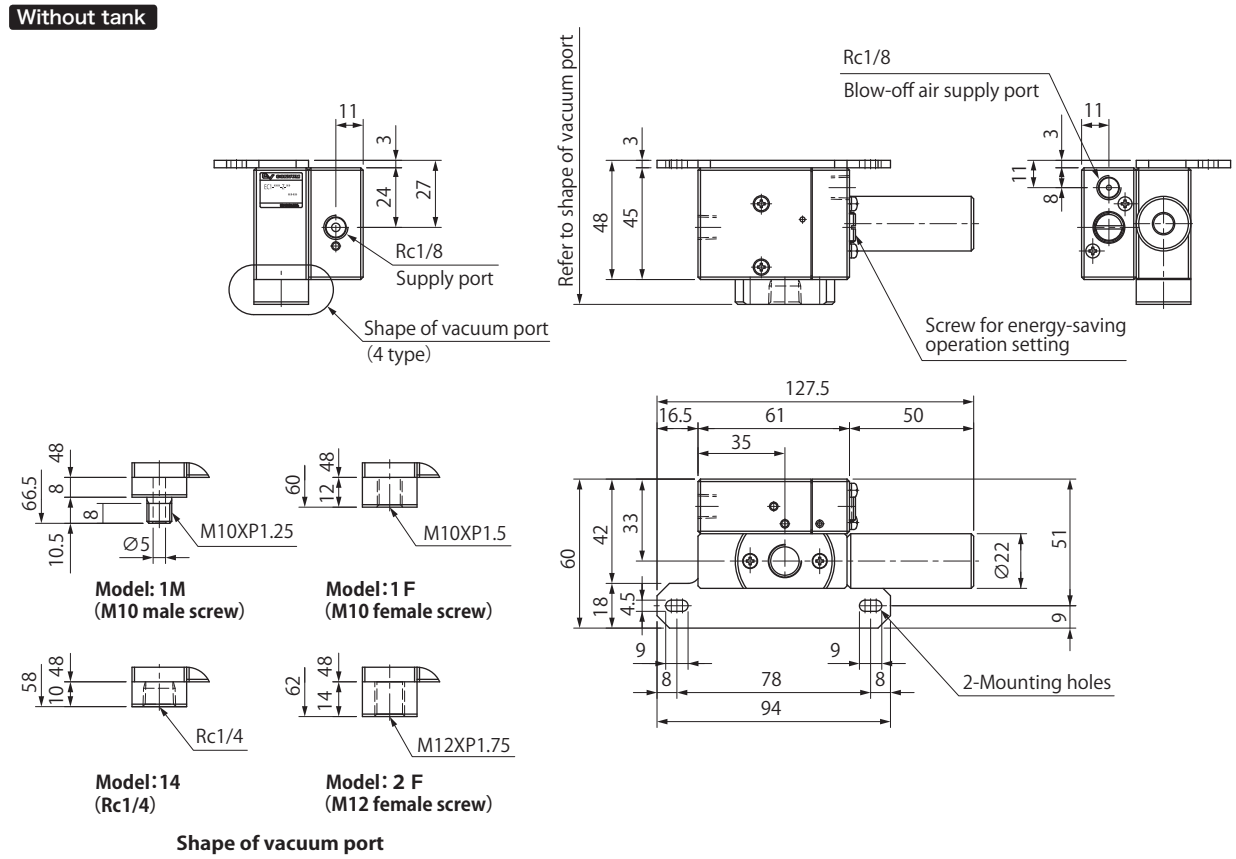

Performance Charts

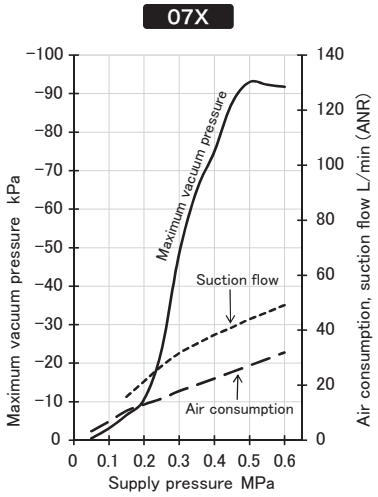

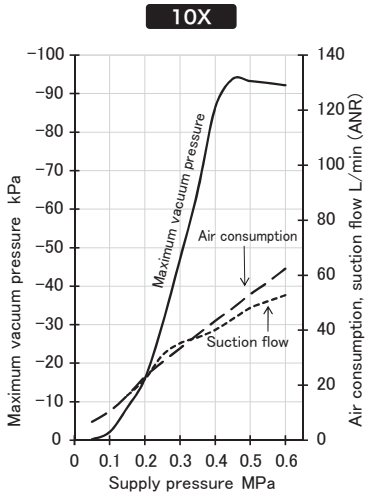

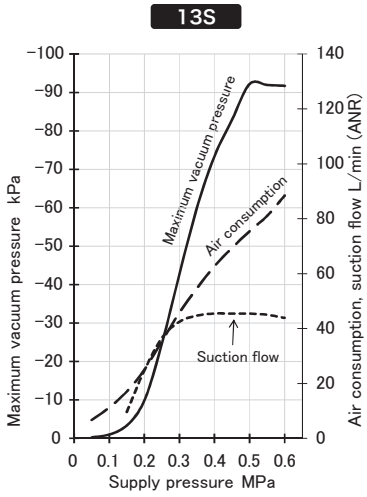

MCA Series

Push-in Connector CONVUM

RoHS

Compact, light weight

Light weight with resin body
Weight: 16.8g

※ MCA-05/07-TTT type

Various piping methods

Push-in connector type

Screw type

Push-in connector type+ screw type

Suction cup direct mounting

How to Order

MCA — 05 H S — T T T
① ② ③ ④ ⑤ ⑥

① Nozzle Type

Symbol	Nozzle size [mm]
05	0.5
07	0.7
10	1.0
13	1.3

② Maximum Vacuum Pressure [kPa]

Symbol	Type	Vacuum pressure
H	High vacuum type	-87
L	High flow type	-53

③ Rated Pressure [MPa]

S	0.5
R	0.35

④ Supply Port(P)

T	φ 6 push-in connector
R	Male screw (R1/8)

⑤ Vacuum Port (V)

T	φ 6 push-in connector
R	Male screw (R1/8)

⑥ Exhaust Port (E)

T	φ 6 push-in connector : for 05, 07 nozzle
	φ 8 push-in connector : for 10, 13 nozzle
R	Female screw (Rc1/8) : for 05, 07 nozzle
	Female screw (Rc1/4) : for 10, 13 nozzle

※ ①②③ Applicable Models

①	②	③ S	③ R
05	H	○	×
	L	○	×
07	H	○	○
	L	○	×
10	H	○	○
	L	○	×
13	H	○	×
	L	○	×

Specifications by Nozzle

Nozzle type	Rated pressure [MPa]	Maximum vacuum pressure [kPa]	Suction flow [L/min (ANR)]	Air consumption [L/min (ANR)]
05HS	0.5	-86	5	13.2
05LS		-60	9	
07HS		-86	11.5	22.6
07LS		-50	19.5	
07HR	0.35	-86	10	24.5
10HS	0.5	-90	25	47.5
10LS		-60	37	
10HR	0.35	-86	21	48.5
13HS	0.5	-92	35	79.5

Option

・Mounting Bracket

MCA — B

※With bracket

CONVUM Specifications

Description ＼ Model number	Unit	MCA-05		MCA-07			MCA-10			MCA-13
		HS	LS	HS	LS	HR	HS	LS	HR	HS
Nozzle size	mm	0.5		0.7			1.0			1.3
Fluid		Non-lubricated compressed air								
Ambient temperature	℃	0～60(No Freezing)								
Operating pressure range	MPa	0.1～0.6								
Rated pressure	MPa	0.5				0.35	0.5		0.35	0.5
Maximum vacuum pressure	kPa	-86	-60	-86	-50	-86	-90	-60	-86	-92
Suction flow	L/min(ANR)	5	9	11.5	19.5	10	25	37	21	35
Air consumption	L/min(ANR)	13.2		22.6		24.5	47.5		48.5	79.5

Weight (g)

05/07 Nozzle Type

Port type	Weight
TTT	16.8
TTR	16.6
TRR	16.4
TRT	16.6
RRR	16.9
RRT	17.1
RTT	17.3
RTR	17.1

10/13 Nozzle Type

Port type	Weight
TTT	23.6
TTR	21.9
TRR	22.4
TRT	24.1
RRR	22.2
RRT	23.9
RTT	23.4
RTR	21.7

Mounting Bracket

Model number	Weight
MCA-B	1.1

Symbol

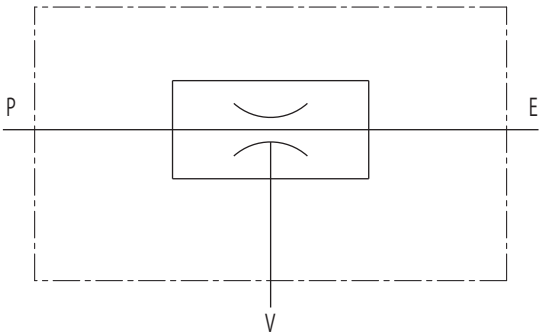

Construction

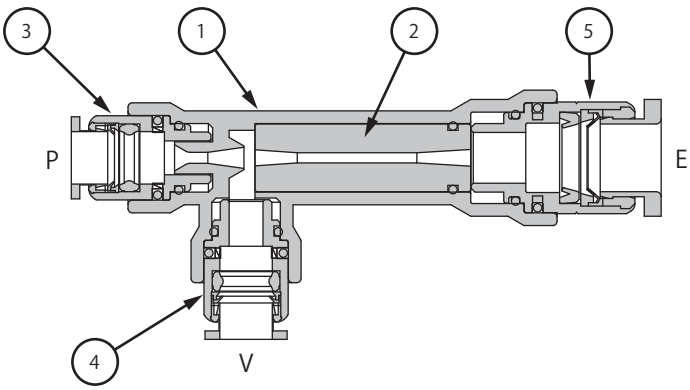

Component Parts

No.	Parts name	Material
1	Body	PA
2	Diffuser	Aluminum
3	Supply port Ass'y	-
4	Vacuum port Ass'y	-
5	Exhaust port Ass'y	-

Performance Charts

05HS

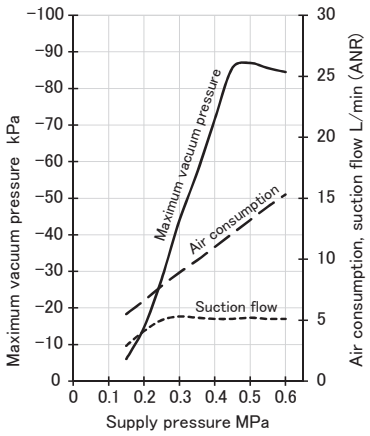

05LS

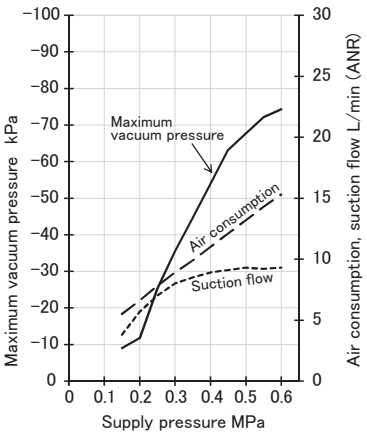

07HS

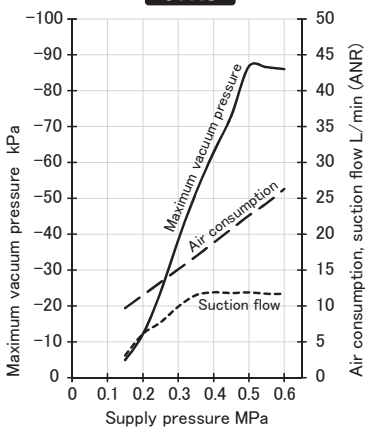

07LS

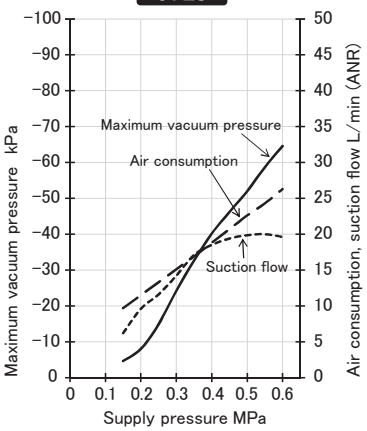

07HR

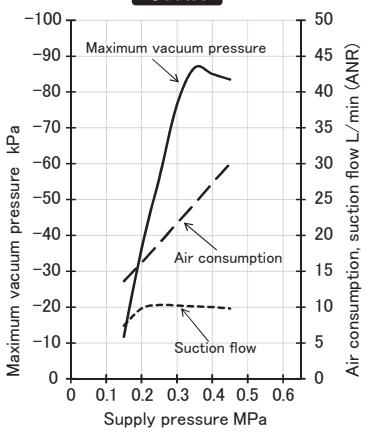

10HS

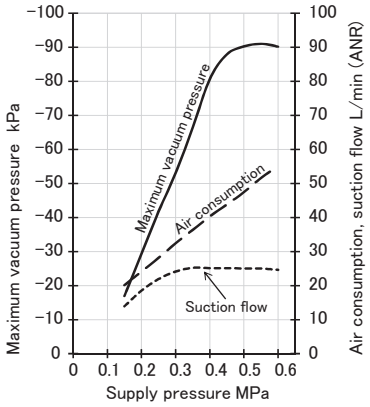

10LS

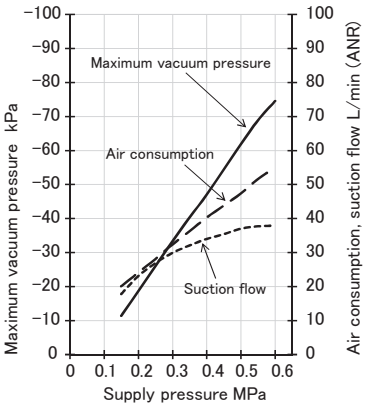

10HR

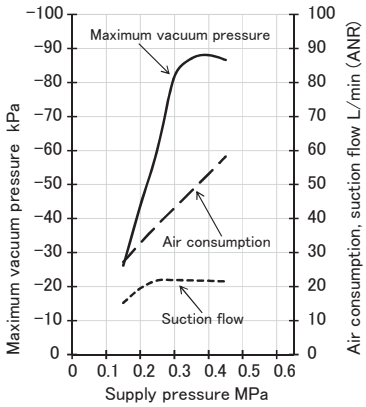

13HS

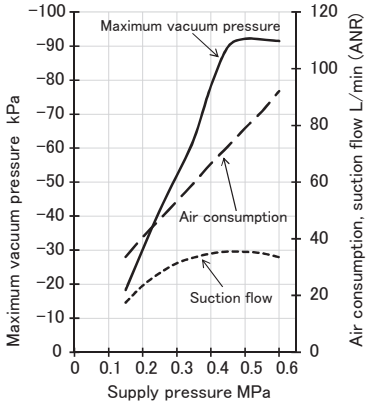

Suction Flow / Vacuum Pressure Characteristics

05HS

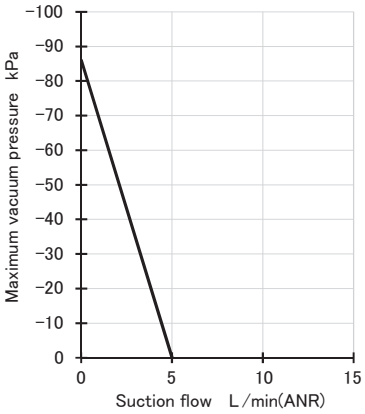

05LS

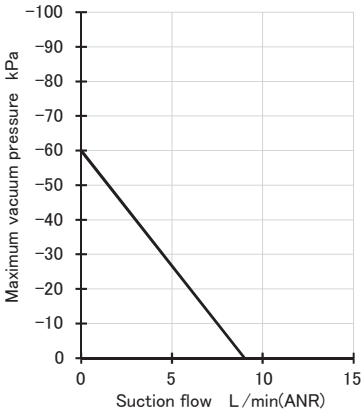

07HS

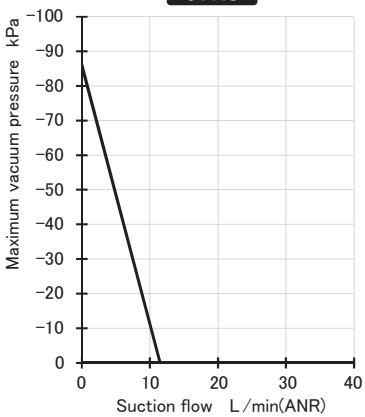

07LS

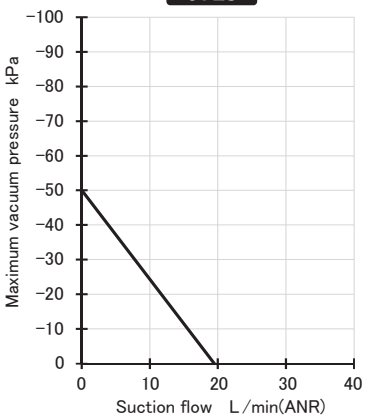

07HR

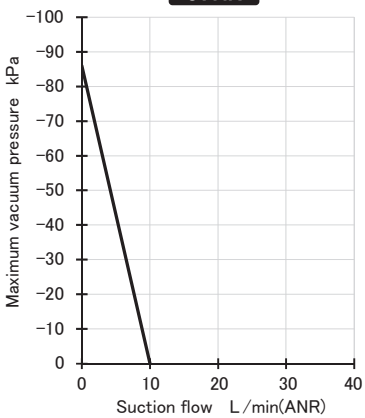

10HS

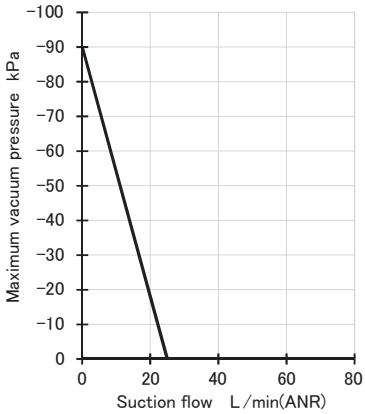

10LS

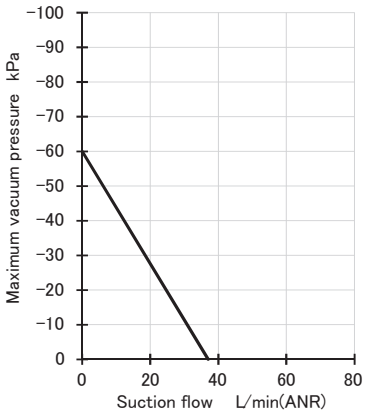

10HR

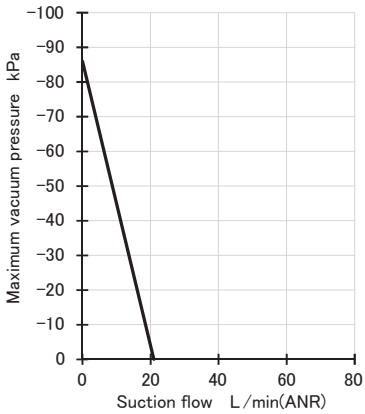

13HS

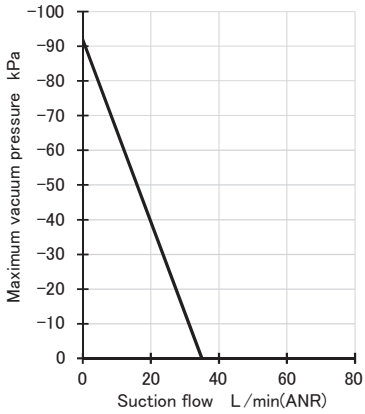

Dimensions

MCA-05 / 07

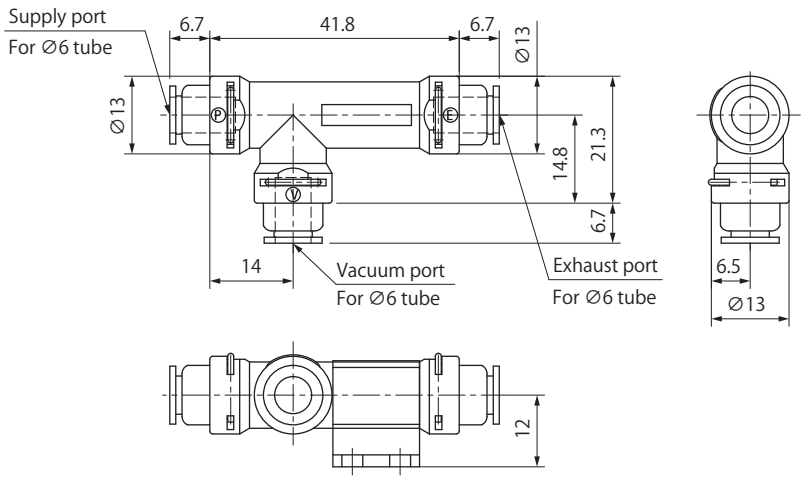

Shape of push-in connector: male screw

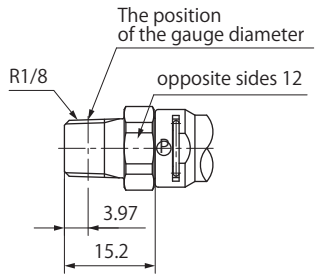

Shape of push-in connector: female screw

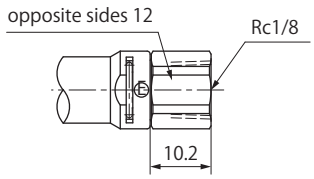

MCA-10 / 13

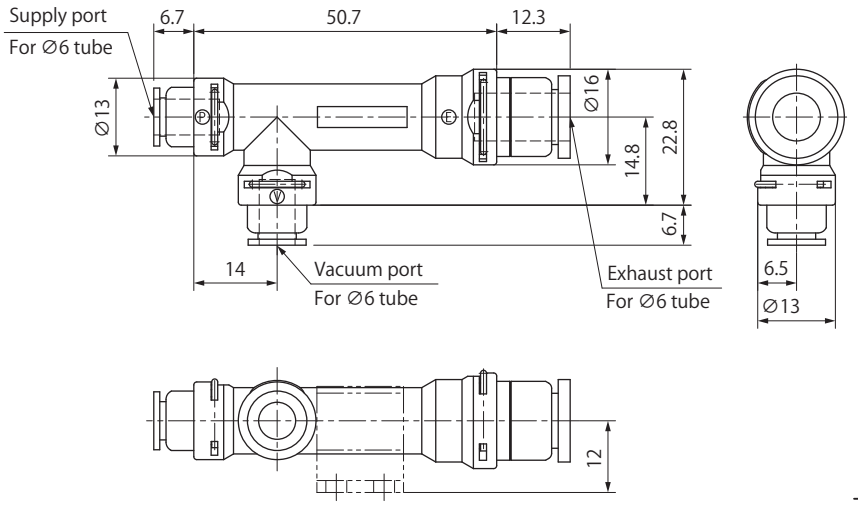

Shape of push-in connector: male screw

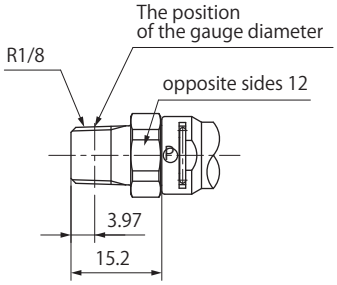

Shape of push-in connector: female screw

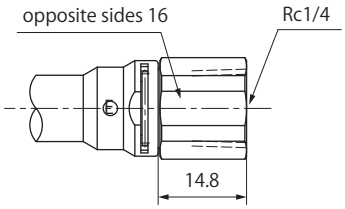

(mm)

MCA - B

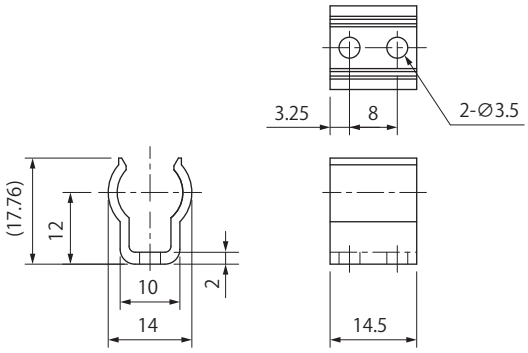

HDV Series

High Vacuum Level CONVUM

RoHS

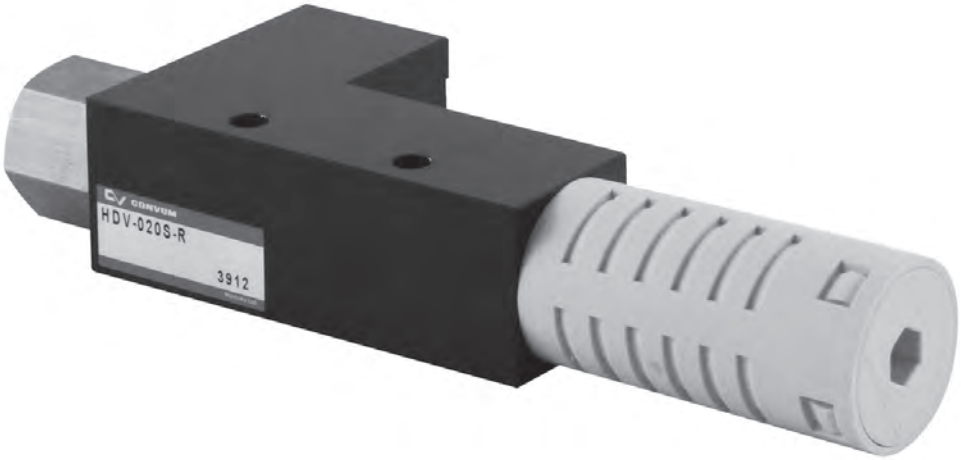

Vacuum level is higher than ordinary CONVUM

Vacuum level up to-98.6kPa!
Suitable to check the air leak,
strengthen the suction force.

How to Order

HDV — 020S — R

Port screw

Symbol	Vacuum port	Supply port
R	Rp 1/8	Rp 1/4
N★	NPS 1/8-18	NPS 1/4
G★	G 1/8	G 1/4

★are made to order

Maintenance Parts

MSL — 02

CONVUM Specifications

Description \ Model number	Unit	HDV-020S
Fluid		Non-lubricated compressed air
Ambient temperature	℃	0～60 (No Freezing)
Operating pressure range	MPa	0.2～0.6
Nozzle size	mm	2
Rated pressure	MPa	0.5
Suction flow	L/min(ANR)	35
Maximum vacuum pressure	kPa	-98.6(it depends on the atmospheric pressure)
Air consumption	L/min(ANR)	180
Weight (with silencer)	g	346

Silencer Specifications

Description \ Model number	Unit	MSL-02
Fluid		Non-lubricated compressed air
Ambient temperature	℃	0～60 (No Freezing)
Operating pressure range	MPa	0～0.5
Port size		R1/2
Weight	g	25

Construction

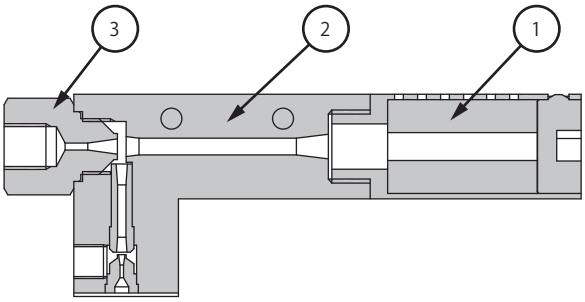

Component Parts

No.	Parts name	Material
1	Silencer	PE, PVA
2	Body	Aluminum
3	Nozzle	Brass (nickel plating)

Symbol

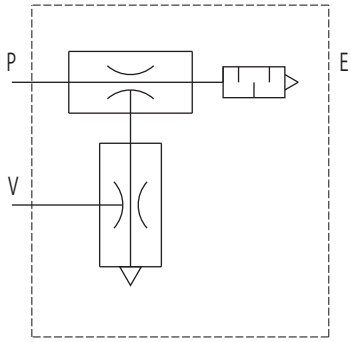

Performance Charts

020S

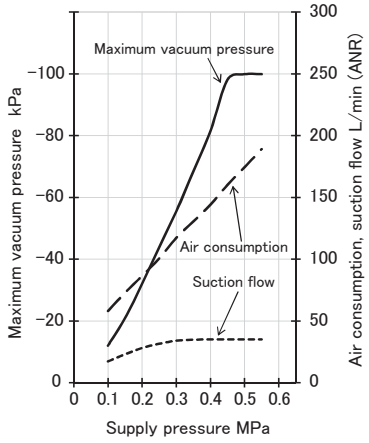

Suction Flow / Vacuum Pressure Characteristics

020S

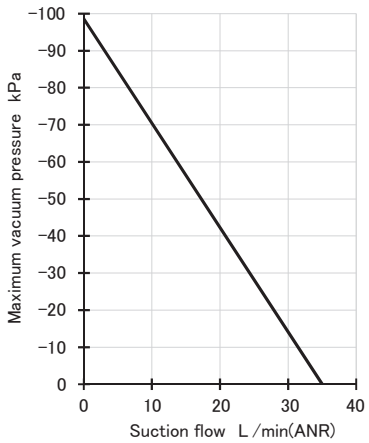

Dimensions

(mm)

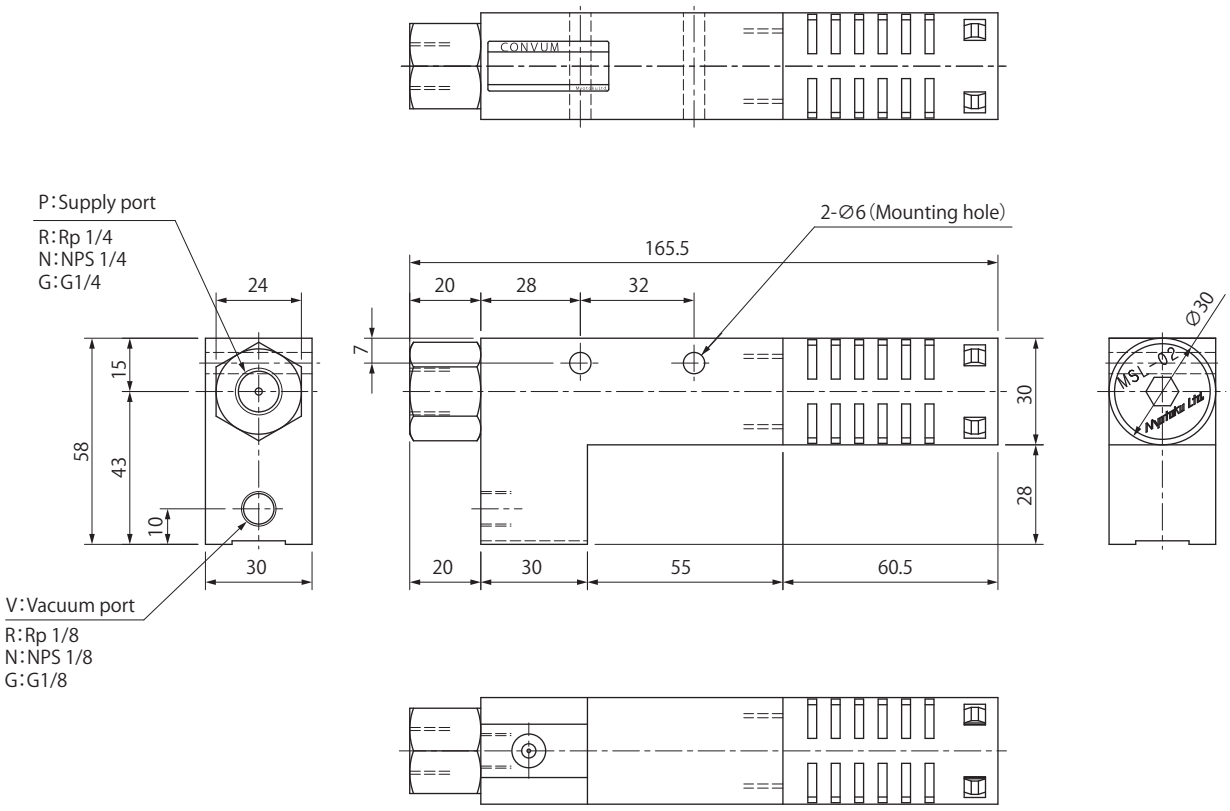

HFV Series

High Vacuum Suction CONVUM

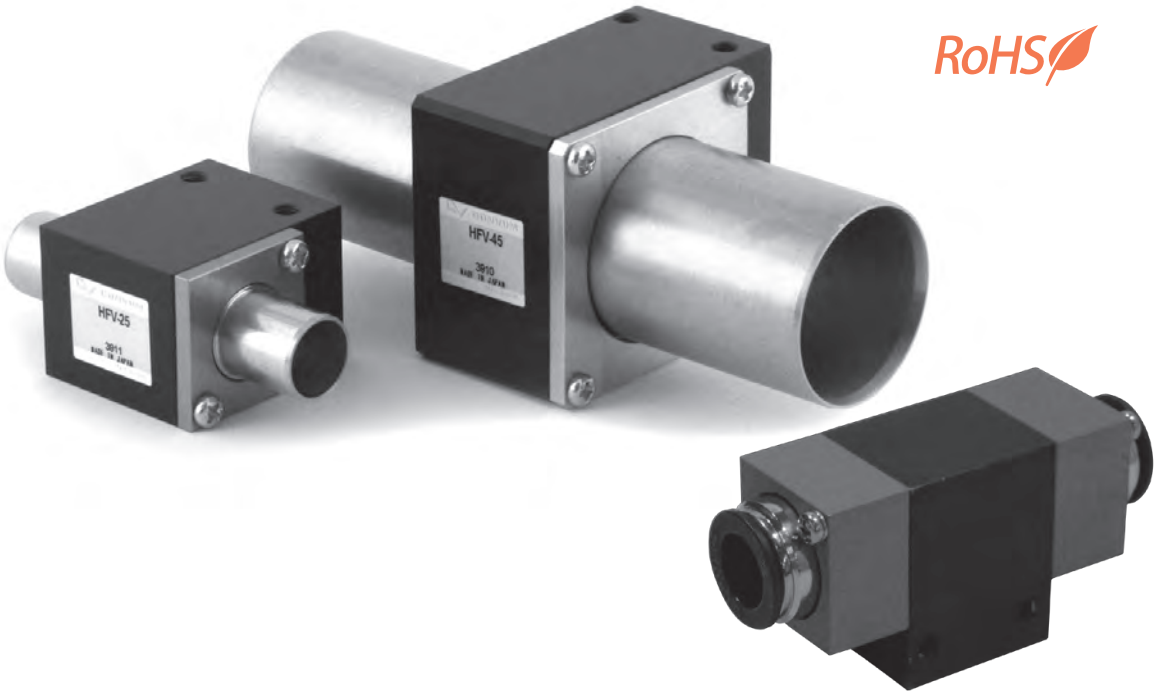

RoHS

High suction flow

- Suction flow up to 740L/min(ANR)

※ HFV-45 type

Push-in connector type can be selectable

Various applications

- For handing the light and porous workpieces. 「Tablet Sheet」

● Suction the small object 「Rice」

● Air, gas suction 「Smoke of Incense」
(Please consult with us for other gas expect for air)

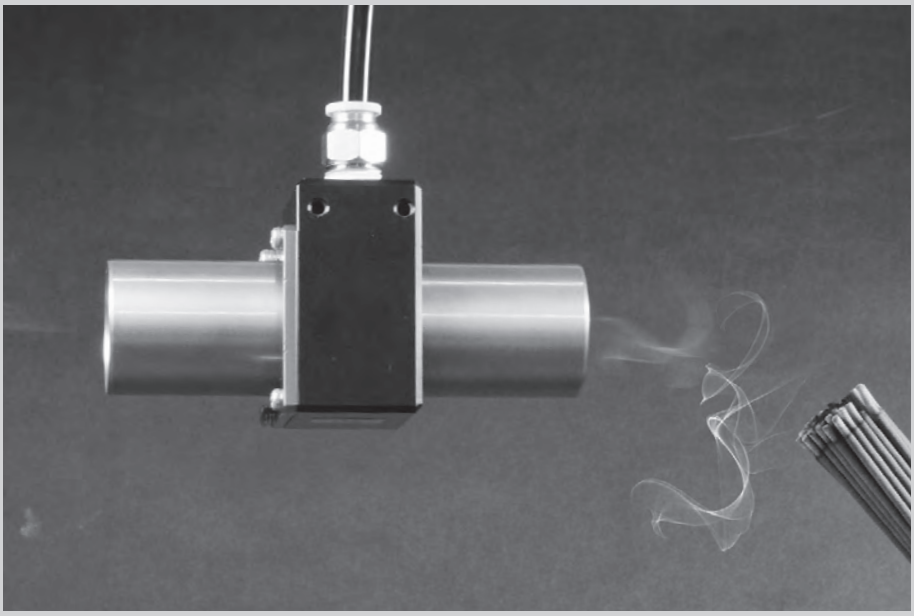

How to Order

HFV — 25 M
① ②

① Body Size [mm]

Symbol	Size
25	25
30	30
45	43.5

② Connector

Blank	Connector for hose
M	Push-in connector (25 only)

CONVUM Specifications

Description \ Model number	Unit	HFV-25	HFV-30	HFV-45	HFV-25M
Fluid		Non-lubricated compressed air			
Ambient temperature	℃	0~55(No Freezing)			
Operating pressure range	MPa	0.1~0.6			
Rated pressure	MPa	0.5			
Suction flow	L/min(ANR)	230	305	740	140
Maximum vacuum pressure	kPa	-11	-5.0	-2.0	-17.5
Air consumption	L/min(ANR)	170	145	160	170
Weight	g	70	113	205	130

Construction

Connector for Hose Type

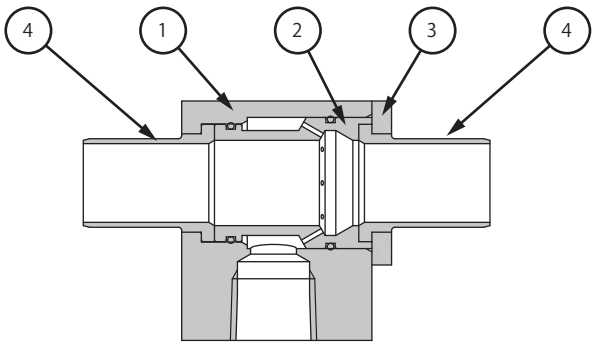

Component Parts

No.	Parts name	Material
1	Body	Aluminum
2	Nozzle Ass'y	Aluminum, NBR
3	Collar	Aluminum
4	Hose joint	SUS

Push-in Connector Type

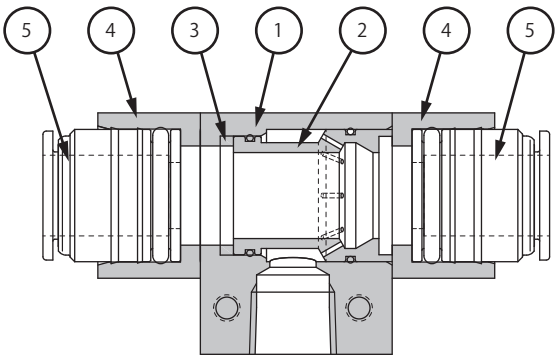

Component Parts

No.	Parts name	Material
1	Body	Aluminum
2	Nozzle Ass'y	Aluminum, NBR
3	Collar	Aluminum
4	Push-in connector cover	Aluminum
5	Push-in connector	-

Performance Charts

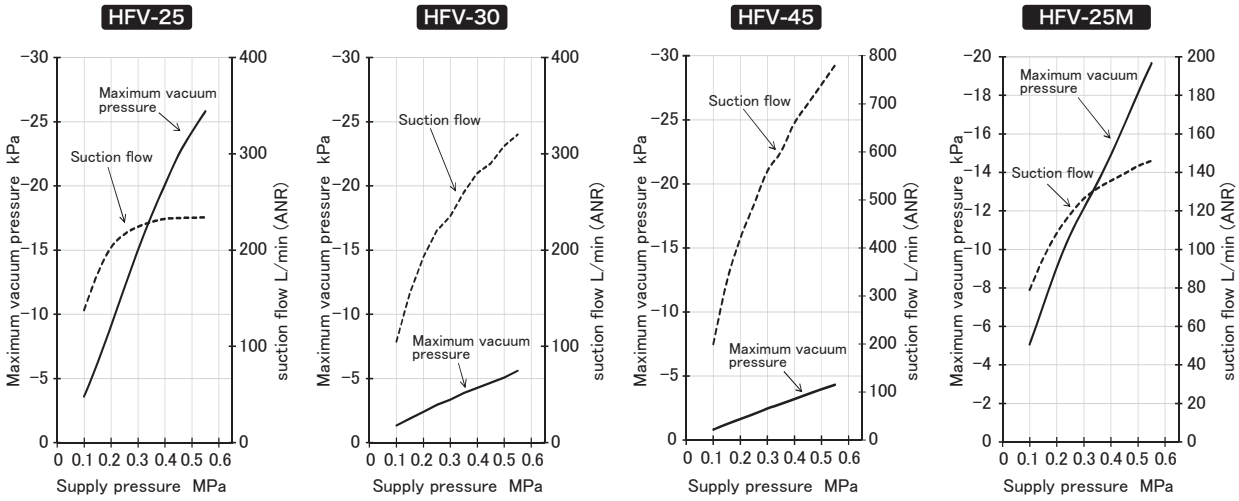

Condition :
Tube in exhaust port with 500mm length

Hose inner diameter (mm)	HFV-25	HFV-30	HFV-45	HFV-25M
	12	19	32	8

Dimensions

(mm)

Connector for Hose Type

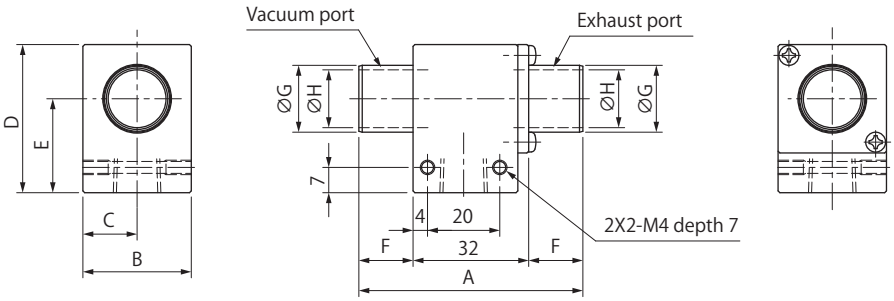

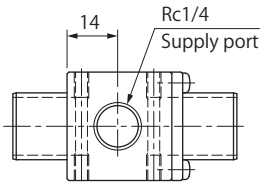

Model number	A	B	C	D	E	F	G	H
HFV-25	62	25	12.5	36.5	24	15	13.5	12
HFV-30	82	30	15	41	26	25	19	16
HFV-45	112	43.5	21.8	54.5	32.8	40	32	29.5

Push-in Connector Type

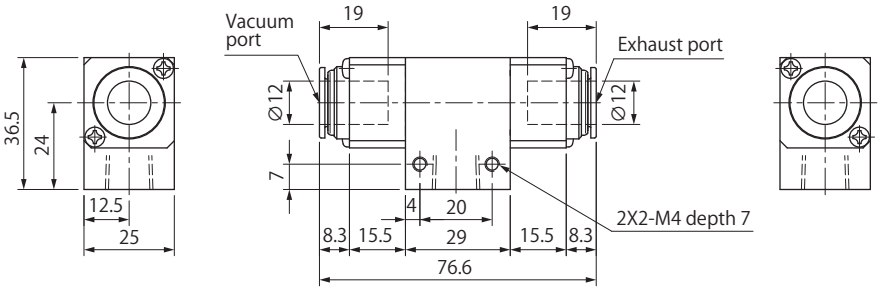

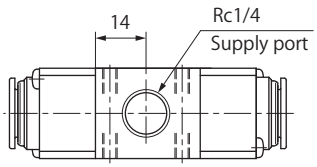

CVZ Series

Big Vacuum Flow CONVUM

RoHS

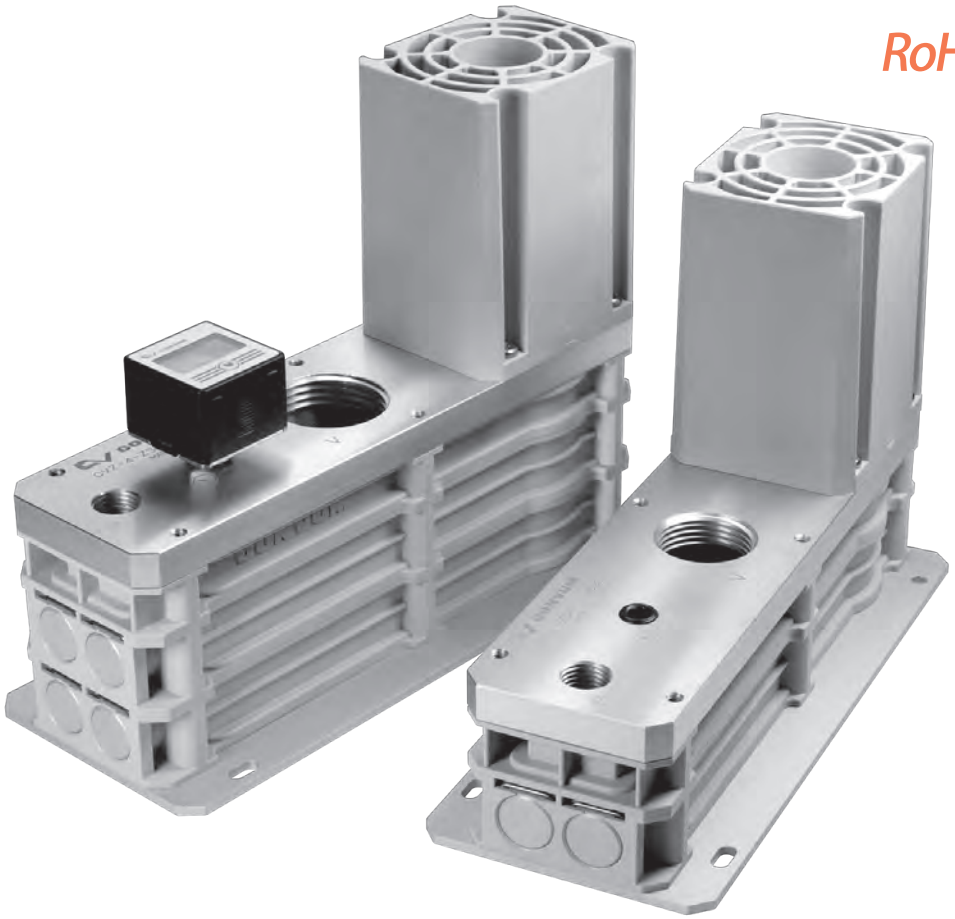

High flow ejector that is comparable to vacuum pump

- Maximum suction flow is **877L/min** (at 4 nozzles, supply pressure 0.55MPa)
- Best choice for suction the workpieces with porous surface and heavy workpieces

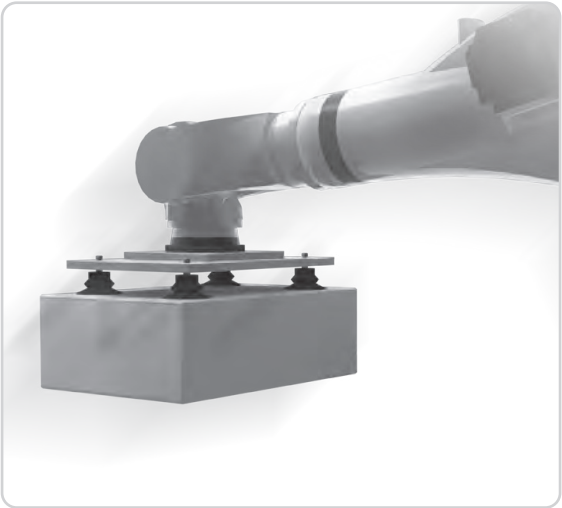

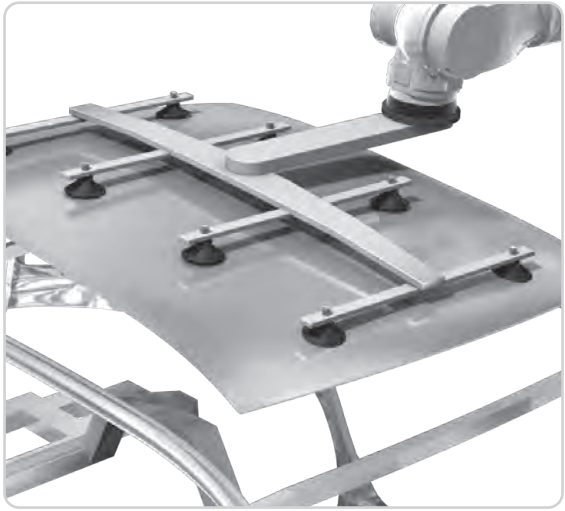

Multi stage nozzle mounted

- Can select 1～4 nozzles
- Wide variety of vacuum range to meet customer's needs

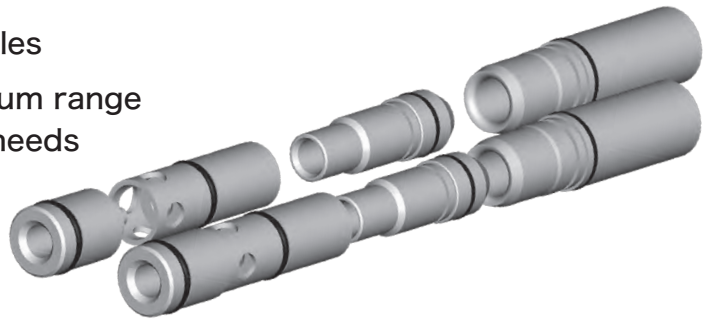

Low noise, 60dB (at 1 nozzle, block the vacuum port, supply pressure 0.55Mpa)

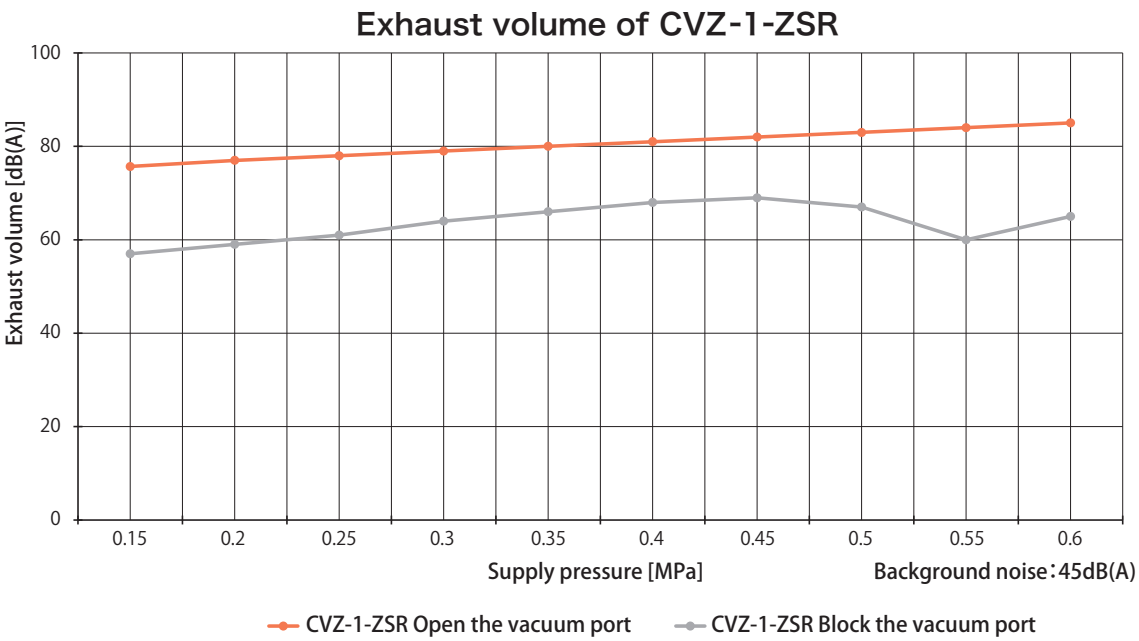

With the port (Rp1/8) to mount the pressure sensor

- Check the vacuum volume
- Features of the pressure sensor (MPS-V60DL-R1-J)

・Battery type, wiring is unnecessary
・Only for measuring the pressure
・With the back light

※ Please consult with us for other sensor

CVZ Big Vacuum Flow CONVUM

How to Order

CVZ — 1 — S S R

① ② ③ ④

① Nozzle Number

Symbol	Number
1	φ1.5X1
2	φ1.5X2
3	φ1.5X3
4	φ1.5X4

② Pressure Sensor

Symbol	Pressure sensor
Z	N/A
S	MPS-V60DL-R1-J (attachment))

③ Silencer

Symbol	Sliencer
Z	N/A
S	With

④ Port Screw

Symbol	Specification
R	Rp
N	NPS
G	G

Nozzle type	Rated pressure [MPa]	Maximum vacuum pressure [kPa]	Suction flow [L/min (ANR)]	Air consumption [L/min (ANR)]
CVZ-1	0.45	-70	323	104
	0.55	-90	356	126
CVZ-2	0.45	-70	557	201
	0.55	-90	604	239
CVZ-3	0.45	-70	699	302
	0.55	-90	768	359
CVZ-4	0.45	-68	792	400
	0.55	-88	877	465

Maintenance Parts

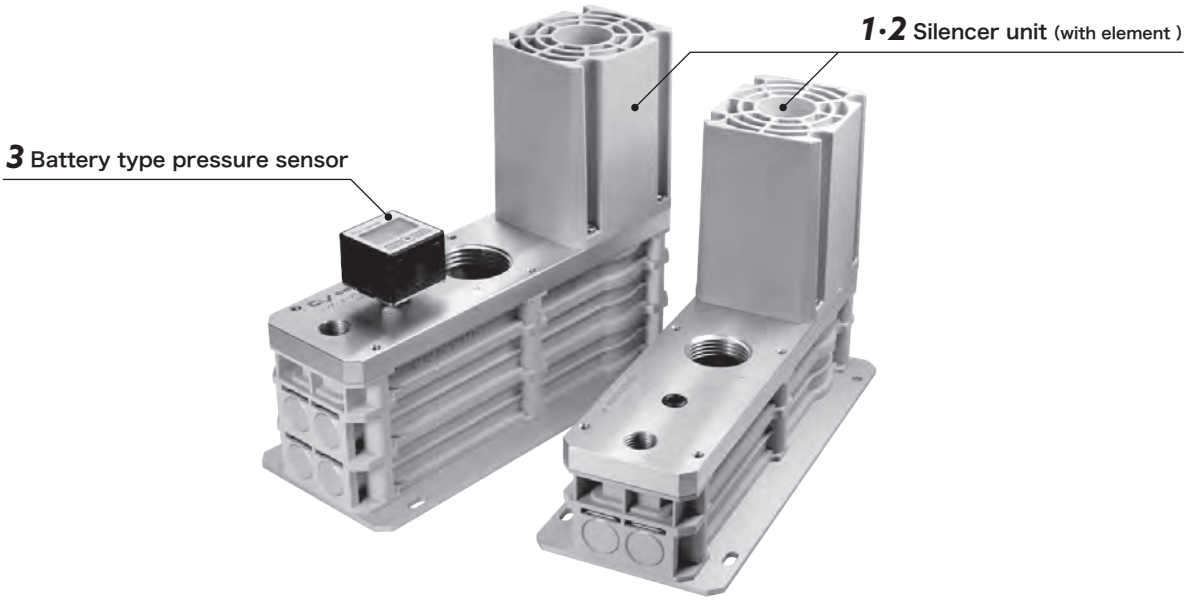

1 Silencer Unit

CVZ — SU

2 Silencer Element

CVZ — SE

3 Battery Type Pressure Sensor

MPS — V60DL — R1 — J

CONVUM Specifications

Description ＼ Model number		Unit	CVZ-1		CVZ-2		CVZ-3		CVZ-4	
Fluid			Non-lubricated compressed air							
Ambient temperature		℃	0～50(No Freezing)							
Operating pressure range		MPa	0.15～0.6							
Rated pressure		MPa	0.45	0.55	0.45	0.55	0.45	0.55	0.45	0.55
Maximum vacuum pressure		kPa	-70	-90	-70	-90	-70	-90	-68	-88
Suction flow		L/min (ANR)	323	356	557	604	699	768	792	877
Air consumption		L/min (ANR)	104	126	201	239	302	359	400	465
Exhaust volume	Block the vacuum port	dB (A)	69	60	73	67	71	67	70	65
	Open the vacuum port	dB (A)	82	84	83	85	86	87	85	87
Recommended solenoid valve effective area		mm^2	More than 7		More than 12		More than 18		More than 25	

Pressure Sensor Specifications

Description ＼ Model number		Unit	MPS-V60DL-R1-J
Fluid			Air (vacuum), non-corrosive gas, non-flammable gas
Diaphragm			Silicon diaphragm
Rated pressure range		kPa	-101.0～0
Withstand pressure		kPa	300
Ambient temperature range		℃	0～50 (No freezing)
Ambient humidity range		%RH	35～85 (No condensation)
Resolution		kPa	1
Battery			CR2032 button type lithium battery Note1
Repeatability		%	±1%F.S ±1digit
Temperature characteristic		%	±2%F.S (At standard temperature 25℃, range 0～50℃)
Display	Time		60 seconds after pressing SET button
	Back light		With
	Battery life		About 1year (operate 5 times one day)
	Low battery indicator		With
LCD display			3 1/2 digits LCD (with back light)
Representational accuracy			±2%F.S ±1digit (temperature:25±3℃)
IP class			IP65 Note2
Vibration resistance			10～55Hz, total amplitude 1.5mm, 50m/ s^2 2 hours each direction of XYZ
Shock resistance			100, 3 times each direction of XYZ
Pressure port size			R1/8, M5 (female)

Note1) Battery is inside, and can be changed by customer. How to change it, please refer to operation manual.
Note2) When IP65 range is required, please use piping in IP65 range too.

Weight (g)

• Body (with silencer, without sensor)

CVZ-1	730
CVZ-2	737
CVZ-3	901
CVZ-4	908

• Maintenance Parts (silencer, sensor)

CVZ-SU	102
MPS-V60DL-R1-J	40

Construction

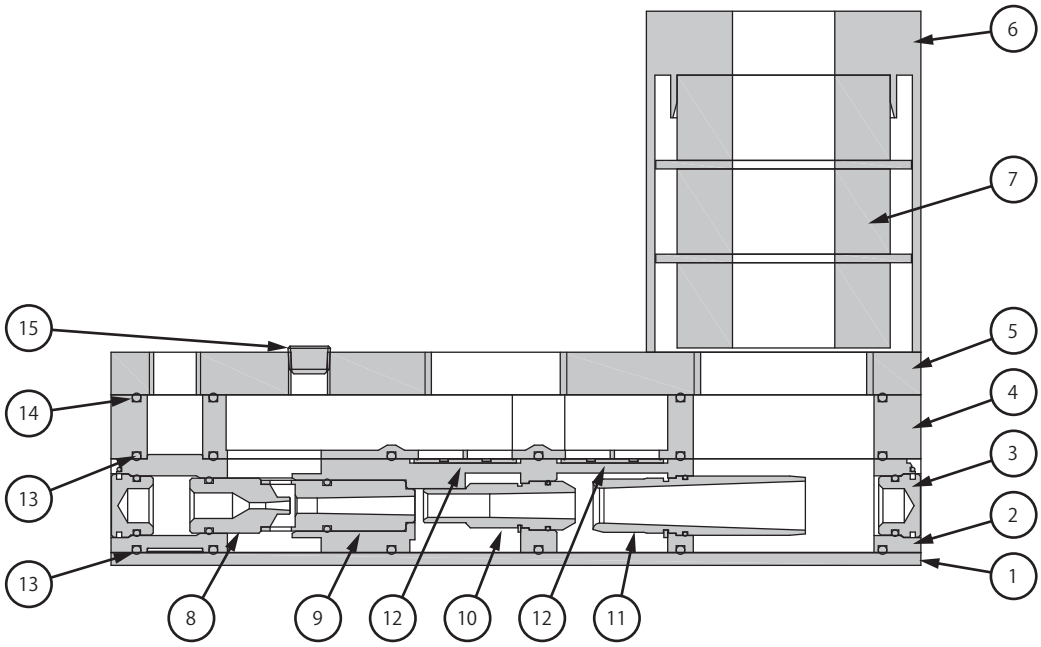

Component Parts

No.	Parts name	Material
1	Plate	Aluminum
2	Body 1	PA
3	Plug	Aluminum
4	Body 2	PA
5	Supply plate	Aluminum
6	Silencer	PA
7	Silencer element	PVA
8	Nozzle 1	Aluminum

No.	Parts name	Material
9	Nozzle 2	Aluminum
10	Nozzle 3	Aluminum
11	Nozzle 4	Aluminum
12	Check valve	NBR
13	Gasket 1	NBR
14	Gasket 2	NBR
15	Screw plug	Carbon steel

Symbol

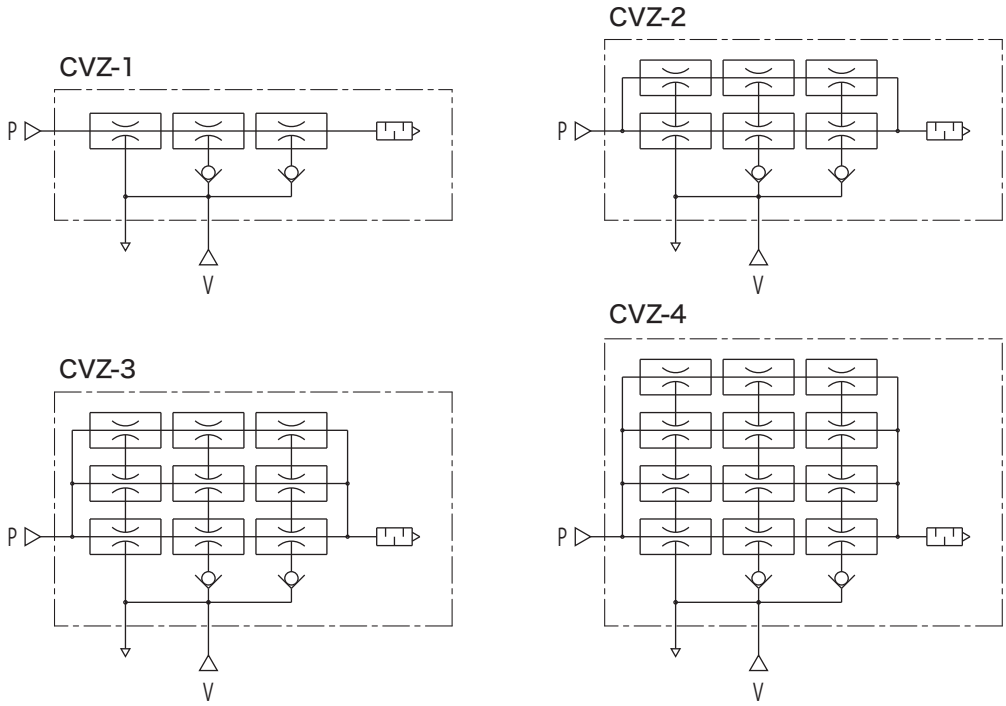

Performance Charts

CVZ-1

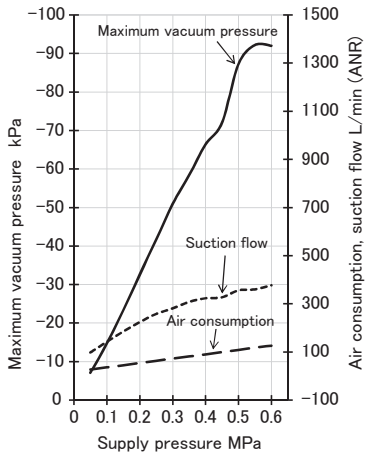

CVZ-2

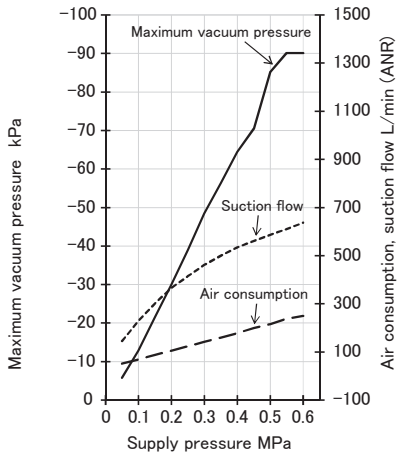

CVZ-3

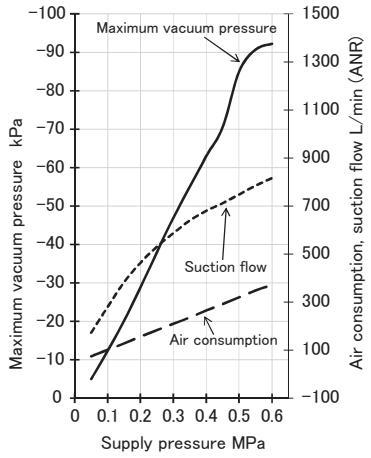

CVZ-4

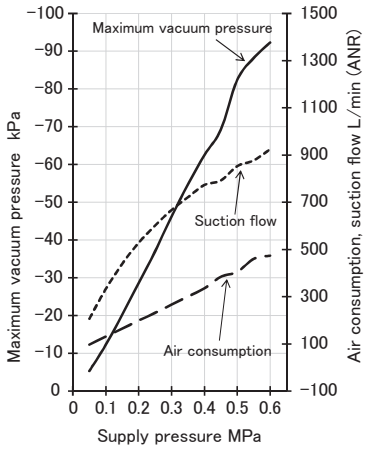

Suction Flow / Vacuum Pressure Characteristics

CVZ-1

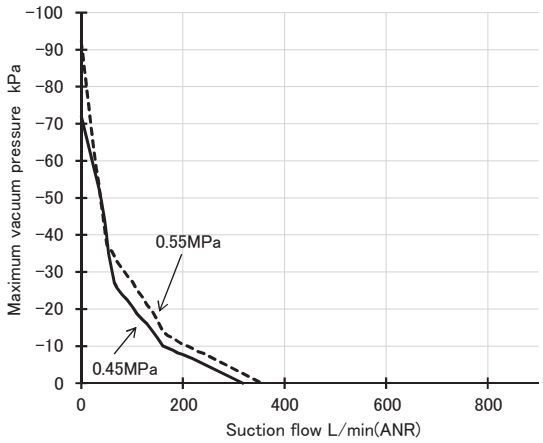

CVZ-2

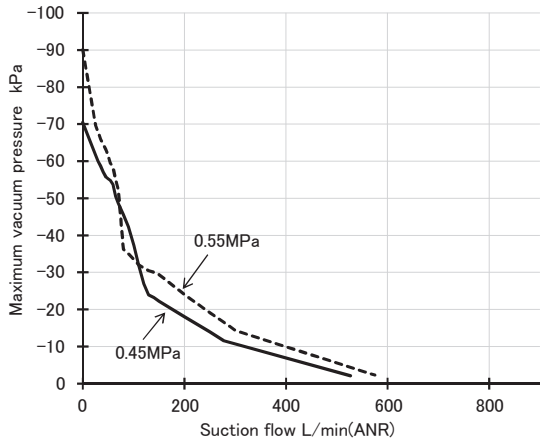

CVZ-3

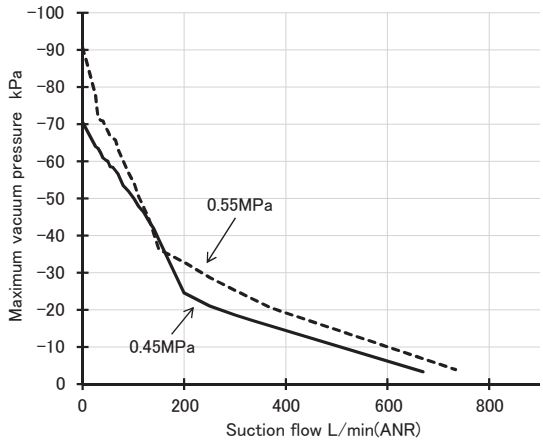

CVZ-4

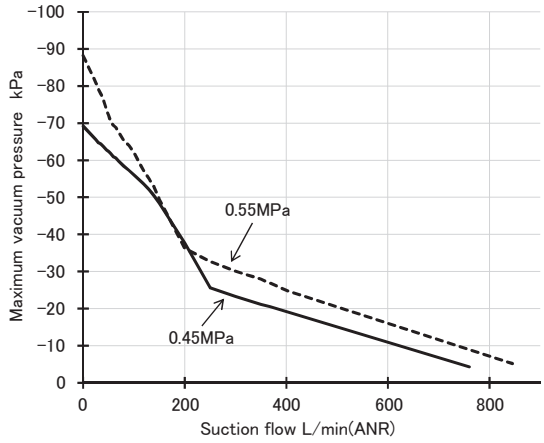

Dimensions

CVZ-1/2 (with sensor)

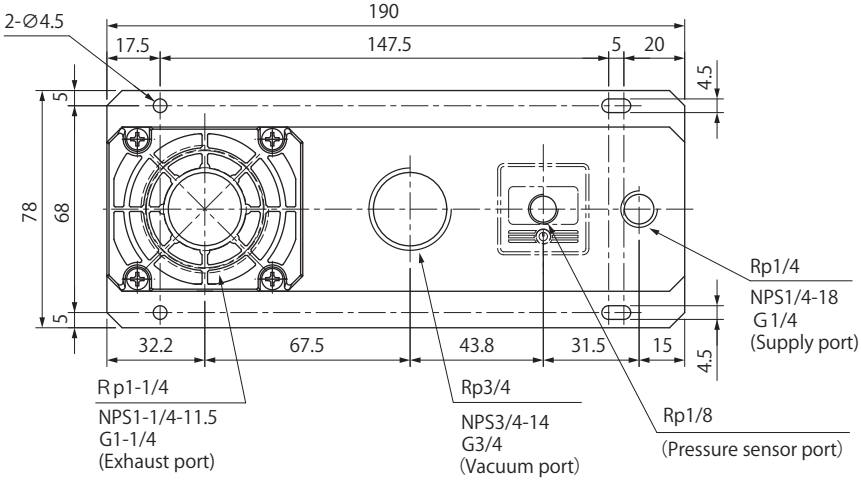

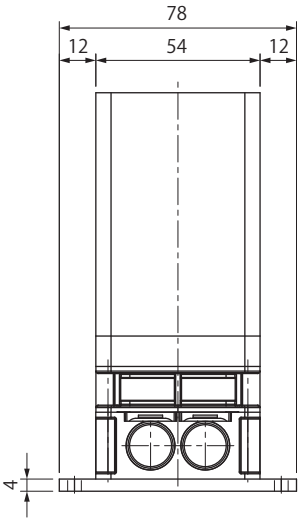

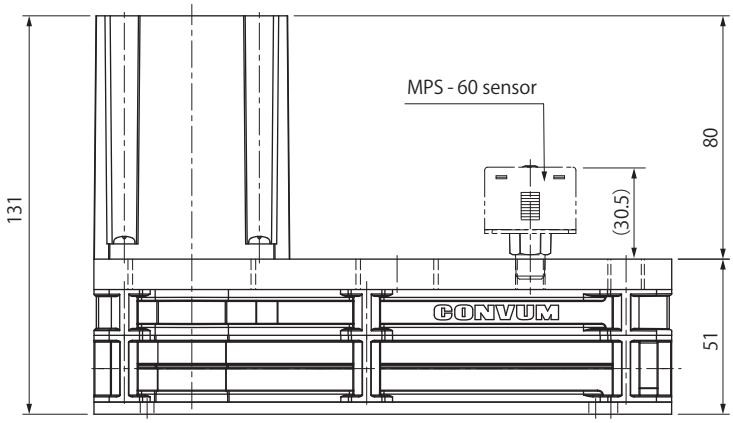

(mm)

CVZ - 3/4 (with sensor)

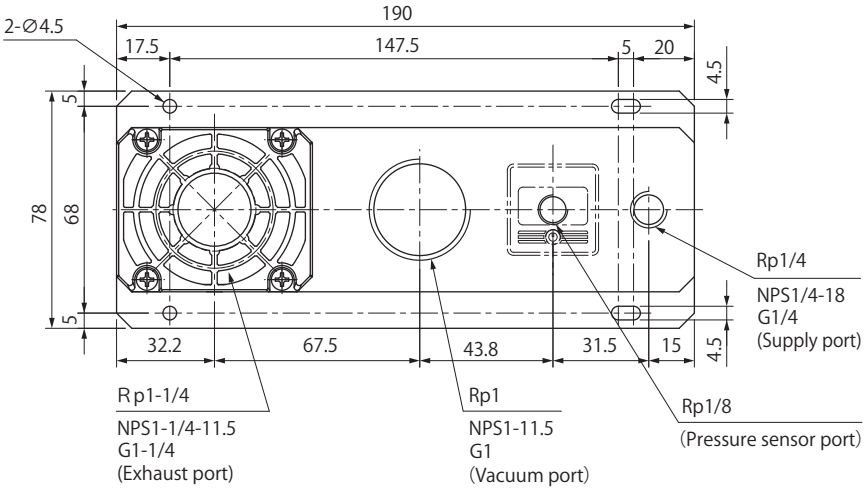

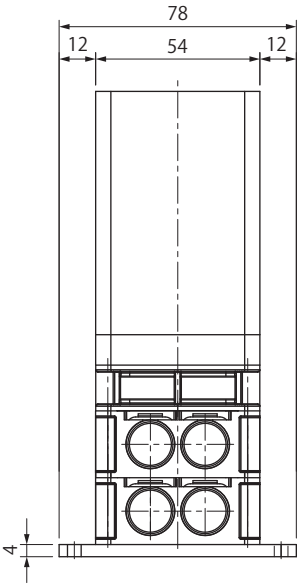

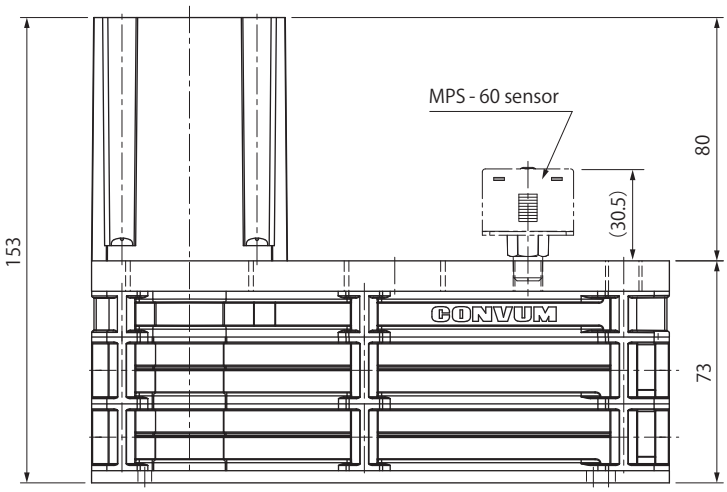

SUCTION CUP

Suction Cup Selection Guide/ Technical Data P.163

Suction Cup Precautions P.171

Suction Cup Basic Performance P.173

Cup with Thin Lip PA series P.177

2 Bellows Cup PB series P.201

3 Bellows Cup PC series P.225

Ring Cup PCD series P.251

Foam Cup PD series P.259

Flat Cup PF series P.277

Flat Cup with Oil Grooves PFO series P.309

Deep Cup PH series P.323

2 Bellows Cup /CORE PJ series P.335

High Durability Cup/Flat Type PK2 series P.367

High Durability Cup/2 Bellows Type PK2B series P.373

High Durability Cup/Oval Type PK2L series P.381

Multiple Bellows Cup PL series P.389

Cup with Thin Lip PN series P.395

Cup for Pouch Film / 2 Bellows Type PN-B series P.427

Cube Cup PP series P.435

Non-rotation Cup PQ series P.441

Cup for Round Bar PR series P.447

Swivel Cup PU series P.459

Oval Cup PW series P.483

Mark Free Cup RA series P.497

Metal Detectable Suction Cup P.499

Setting Screw TN series P.503

Fitting・Setting Screw・Cup with Fitting Application List P.509

Suction Cup Selection Guide

1 Suction of workpieces such as corrugated cardboard having gas permeability

- Cup with small diameter is preferable comparing with those with a large diameter for suction of a workpiece having gas permeability since air leaks lesser. In the case that air leaks heavily, the CONVUM CV-15, CV-20, CVZ and the like, which suction quantity is large, are suitable for the application.

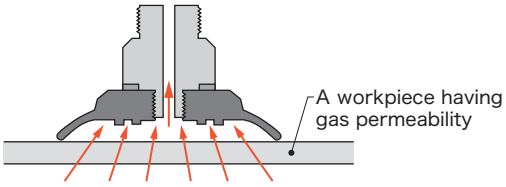

Use the CONVUM having a large suction quantity, and the degree of vacuum will rise.

2 For lifting of planks having a large area

- It is important to stabilize a workpiece by providing a large suction area by making adjustment to the diameter of the cup and the quantity of the cups.
- Loads tend to lean toward one side. Use care to the center of gravity and arrangements of cups.
- A lager wind pressure is applied to the workpiece at the moment when the workpiece is lifted. Give sufficient room for lifting capacity.

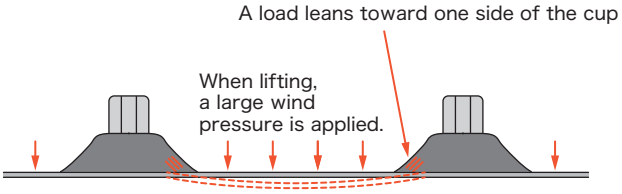

3 When lifting a workpiece by sucking the side of the workpiece

- All of the retention tools of suction cups are designed for horizontal lifting, and therefore take the strength of the retention tool into consideration sufficiently before starting your operation.

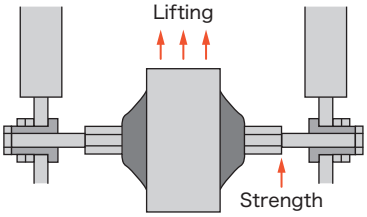

4 Lifting of stacked paper

- When lifting thin and easy-to-deform workpieces, use a number of cups in small diameter and choose the CONVUM having large suction volume. When lifting workpieces sheet by sheet, turn over one by one by using air blow, holders and the like as illustrate below.

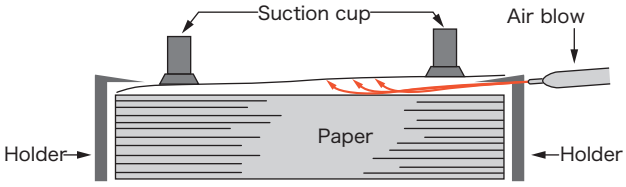

5 When opening vinyl bags, paper bags and the like

- Cups in small diameter are suitable for opening of vinyl bags or paper bags. Slightly move the center of the cups facing each other in opposite directions, and you can open the bags easily.

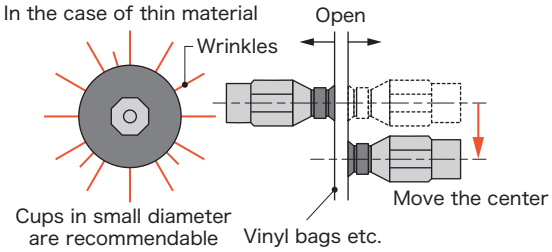

6 Spring cup

- The life of cups with cushions (spring) is generally longer.
- The cups are suitable for stacked workpieces or those with a step.

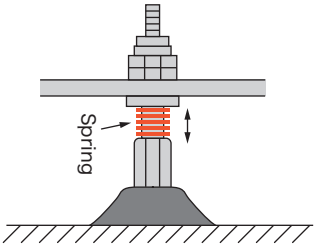

7 Suction of thin workpieces or powder molding products

- When thin workpieces or powder molding products are sucked, these workpieces tend to be deformed due to strong suction force. If the workpieces are deformed, lower the source pressure on the primary side of the CONVUM to reduce the suction force.

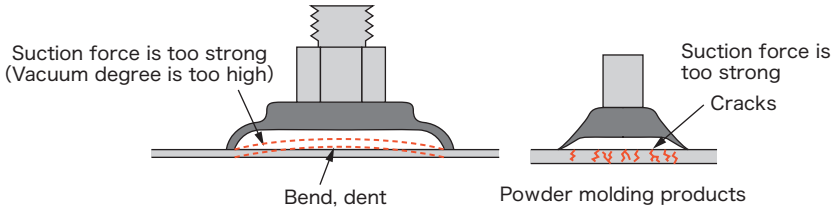

8 Swivel cups

- When the suction surface of the workpiece is not flat, swivel cups are best suitable.

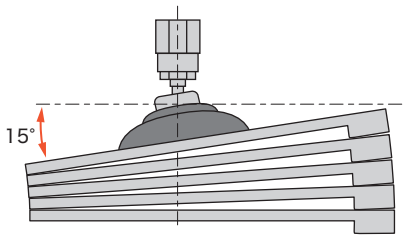

9 If you do not desire that cup marks are left on the workpiece

- Though there is no means to avoid the mark completely, the following suggestion
  - will help you to some extent.
  - Reduce adherence power and minimize friction.
  - Paste the cloth on the cup.
  - Paste a thin film such as vinyl on the surface of the workpiece.
  - Use mark free cups (RA series, non-adhesive, make free treatment).

10 Provide sufficient room for cup diameter and quantity of cups

- At the moment when the workpiece is sucked and lifted, when the workpiece is transferred and stooped, or when the workpiece is oscillated, the force caused by acceleration is not negligible. Provide sufficient room for cup diameters and quantity of cups.

11 Replacement of cups

- When clamping cups less than ϕ50 in diameter with set screws, always use LOCKTITE. Tighten the set screws by additionally tightening half a turn to one turn after the cup contacts the fitting. Do not overtighten, otherwise the rubber could crack due to excessive compression.

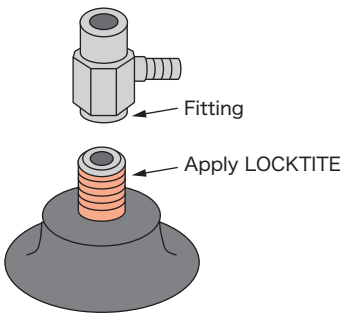

12 Revolving transfer

- When revolving transfer is conducted with a cup fixed with screws, the cup could fall with the screws loosened, and therefore, use care to design a transfer system with sufficient allowance. Special care is particularly required when the suction position deviates from the center of gravity of works as illustrated.

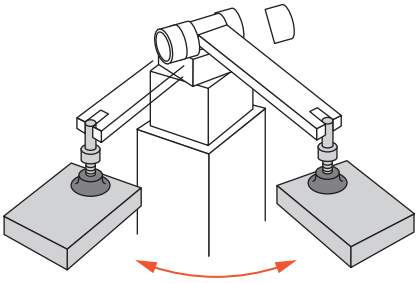

Selection of Suction Cup Fitting

Suction cup with fitting	Fixed type	Spring type	Non-rotation spring
Application	General	For workpieces sensitive to shock For workpieces with different height	Provided with spring for exact positioning

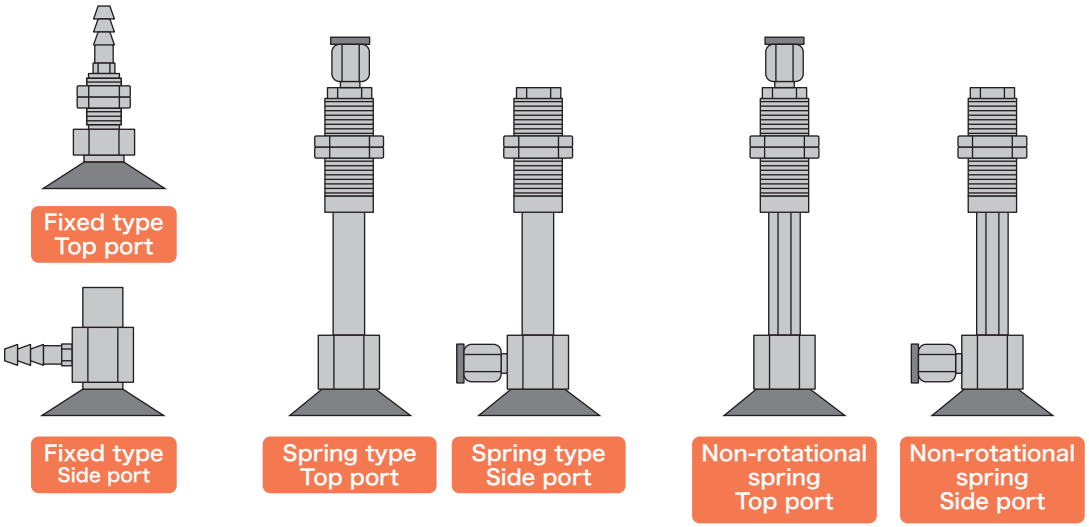

Deep Suction Cup (PH) for Gripping Spherical Objects

Suction cup diameter (mm)	30	45	65	90
Spherical diameter (mm)	More than 50	More than 90	More than 130	More than 180

The values given in this chart are approximate. When selecting, please carefully consider the characteristic of the workpiece and their lifting force.

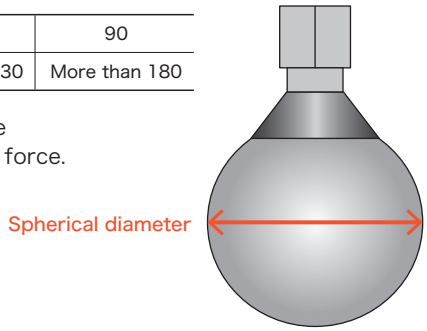

Cylindrical Diameter of Suction Cup for Sound Rods (PR)

Suction cup diameter (mm)	9.5×25	12.5×23	15×30	32×32
Cylindrical diameter (mm)	ϕ 9.5	ϕ 13	ϕ 15	ϕ 32

The values given in this chart are approximate. When selecting, please carefully consider the characteristic of the workpiece and their lifting force.

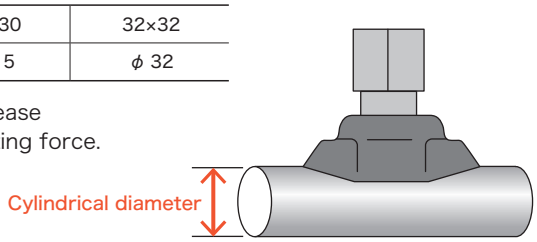

Calculation of Cup Diameter

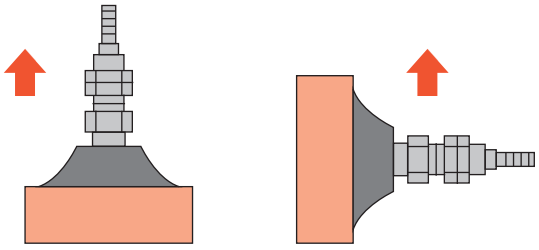

$$D=2\sqrt{\frac{M\times 9.8\times S\times 1000}{\pi\times n\times P}}$$

D : Cup diameter (mm)
M : Workpiece weight (kg)
S : Safety quantity Horizontal lifting : S=4
Vertical lifting : S=8
n : Cup quantity
P : Vacuum pressure (-kPa)

Theoretical Lifting Force (Suction Force)

Round Cup Table

(N)

Cup diameter (ϕ mm)	Suction surface (cm²)	Vacuum pressure (kPa)					
		-40	-50	-60	-70	-80	-90
1	0.008	0.031	0.039	0.047	0.055	0.063	0.071
1.5	0.018	0.071	0.088	0.106	0.124	0.141	0.159
2	0.031	0.126	0.157	0.188	0.22	0.251	0.283
3.5	0.096	0.385	0.481	0.577	0.673	0.77	0.866
4	0.126	0.502	0.628	0.754	0.879	1.005	1.13
5	0.196	0.785	0.982	1.178	1.374	1.571	1.767
6	0.283	1.131	1.414	1.696	1.979	2.262	2.545
7	0.385	1.539	1.923	2.308	2.693	3.077	3.462
8	0.503	2.011	2.513	3.016	3.519	4.021	4.524
10	0.785	3.142	3.927	4.712	5.498	6.283	7.069
15	1.77	7.069	8.836	10.6	12.37	14.14	15.9
20	3.14	12.57	15.71	18.85	21.99	25.13	28.27
25	4.91	19.63	24.54	29.45	34.36	39.27	44.18
30	7.07	28.27	35.34	42.41	49.48	56.55	63.62
35	9.62	38.48	48.11	57.73	67.35	76.97	86.59
40	12.57	50.27	62.83	75.4	87.96	100.5	113.1
50	19.63	78.54	98.17	117.8	137.4	157.1	176.7
60	28.27	113.1	141.4	169.6	197.9	226.2	254.5
80	50.27	201.1	251.3	301.6	351.9	402.1	452.4
95	70.88	283.5	354.4	425.3	496.2	567.1	637.9
100	78.54	314.2	392.7	471.2	549.8	628.3	706.9
120	113.1	452.4	565.5	678.6	791.7	904.8	1017.9
150	176.7	706.9	883.6	1060	1237	1414	1590
200	314.2	1257	1571	1885	2199	2513	2827

Oval Cup Table

(N)

Cup diameter (ϕ mm)	Suction surface (cm²)	Vacuum pressure (kPa)					
		-40	-50	-60	-70	-80	-90
2 × 4	0.071	0.286	0.357	0.428	0.5	0.571	0.643
3.5 × 7	0.219	0.875	1.094	1.312	1.531	1.75	1.968
4 × 10	0.366	1.463	1.828	2.194	2.56	2.925	3.291
4 × 20	0.766	3.063	3.828	4.594	5.36	6.125	6.891
4 × 30	1.166	4.663	5.828	6.994	8.16	9.325	10.49
5 × 10	0.446	1.785	2.232	2.678	3.124	3.571	4.017
5 × 20	0.946	3.785	4.732	5.678	6.624	7.571	8.517
5 × 30	1.446	5.785	7.232	8.678	10.12	11.57	13.02
6 × 10	0.523	2.091	2.614	3.136	3.659	4.182	4.705
6 × 20	1.123	4.491	5.614	6.736	7.859	8.982	10.1
6 × 30	1.723	6.891	8.614	10.34	12.06	13.78	15.5
8 × 20	1.463	5.851	7.313	8.776	10.24	11.7	13.16
8 × 30	2.263	9.051	11.31	13.58	15.84	18.1	20.36

Oval Cup Table (PK2L series)

(N)

Cup diameter (ϕ mm)	Suction surface (cm²)	Vacuum pressure (kPa)					
		-40	-50	-60	-70	-80	-90
60 × 20	8.7	34.9	43.7	52.4	61.1	69.8	78.6
80 × 30	19.4	77.4	96.8	116.1	135.5	154.8	174.2
100 × 40	34.6	138.5	173.1	207.7	242.3	276.9	311.5

Applications List for Major Suction Cup Materials

This chart is applicable for general workpiece. As there are many different types of workpieces, please contact us for advice.

Material	Symbol	Characteristics	Applicable applications
Nitrile rubber	N	Excellent resistance against oils and wear	General workpieces
Hydrogenated nitrile rubber	HNBR	Excellent resistance against ozone	Environments with ozone
Silicone rubber	S	Excellent resistance against heat and cold	Removal of food products, thin workpieces and molding materials
Urethane rubber	U	Excellent resistance against wear	Cardboards, metal sheets and veneer sheets
Fluorine rubber	F	Excellent resistance against chemicals, heat and ozone	Chemical environments
Conductive nitrile rubber	NE	Conductive nitrile rubber	Countermeasure against semiconductor electrostatics
Conductive silicone rubber	SE	Conductive silicone rubber	Countermeasure against semiconductor electrostatics
Conductive fluorine rubber	FE	Conductive fluorine rubber	Countermeasure against semiconductor electrostatics
Thermoplastic polyurethane	T	Having high durability	Metal sheets, cardboards etc.
Natural rubber	NR	Rubber that is friendly to environments without additives	Food products

※ Please consult with us for other materials.
※ Please refer to below table for physical property of rubber.

Physical Property Data

	Material		Nitrile rubber	Conductive nitrile rubber	Hydrogenated nitrile rubber	Silicone rubber	Conductive silicone rubber	Silicone metal
	Symbol		N	NE	HNBR	S	SE	SM
Specifications	Color / Identification		Black	Black with blue dot	Black	Translucent white	Black with red dot	Grey
Specifications	Hardness	JIS K6253/K7311	55	70	55	55	55	55
Mechanical properties	Specific gravity	JIS K6268/Z8807	1.20	1.17	1.134	1.16	1.13	1.67
Mechanical properties	Tensile strength	JIS K6251/K7311	○	○	◎	×	×	×
Mechanical properties	Stretch	JIS K6251/K7311	◎	○	◎	△	△	△
Mechanical properties	Impact resilience	JIS K6255/K6301	○	○	○	◎	◎	◎
Mechanical properties	Tear resistance	JIS K6252/K7311	◎	◎	◎	×～△	×～△	×～△
Mechanical properties	Abrasion resistance	JIS K6264-2/K7311	○	○	○	×～△	×～△	×～△
Mechanical properties	Flex crack resistance	JIS K6260	○	○	○	×～○	×～○	×～○
Mechanical properties	Adhesive	Test by Myotoku	△	△	△	○	○	○
Physical properties	Maximum operation temperature (℃)	-	120	120	120	250	250	250
Physical properties	Brittle temperature (℃)	JIS K6261/K6301	-27	-27	-27	-70	-70	-70
Physical properties	Heat aging resistance	-	○	○	○	◎	◎	◎
Physical properties	Weather resistance (ultraviolet)	-	○	○	○	◎	◎	◎
Physical properties	Ozone resistance	-	△	△	△	◎	◎	◎
Physical properties	Gas permeability resistance	-	○	○	○	×～△	×～△	×～△
Electrical properties	Volume resistivity (Ω・㎝) ※Finger in( ) is reference	Test by Myotoku 23℃・50%rh	(10^{11})	10^{2}～10^{3}	(10^{14})	(10^{15})	10^{2}～10^{4}	(10^{15})
Oil resistance /Chemical resistance	Gasoline・Diesel oil		○～◎	○～◎	○～◎	×～△	×～△	×～△
Oil resistance /Chemical resistance	Hydrocarbon solvents	Toluene	×～△	×～△	×～△	×	×	×
Oil resistance /Chemical resistance	Hydrocarbon solvents	Benzene	×	×	×	×～△	×～△	×～△
Oil resistance /Chemical resistance	Alcohols solvent	Ethanol	○～◎	○～◎	○～◎	○	○	○
Oil resistance /Chemical resistance	Alcohols solvent	IPA	○	○	○	◎	◎	◎
Oil resistance /Chemical resistance	Ether solvent	Isopropyl ether	×～○	×～○	×～○	×	×	×
Oil resistance /Chemical resistance	Ether solvent	Diethyl ether	×～△	×～△	×～△	×	×	×
Oil resistance /Chemical resistance	Ketone solvent	Acetone	×	×	×	△～○	△～○	△～○
Oil resistance /Chemical resistance	Ketone solvent	MEK	×	×	×	×～△	×～△	×～△
Oil resistance /Chemical resistance	Ester solvents	Ethyl acetate	×	×	×	×～△	×～△	×～△
Oil resistance /Chemical resistance	Strong acid	Hydrochloric acid (10%)	○～◎	○～◎	○～◎	○	○	○
Oil resistance /Chemical resistance	Strong acid	Sulfuric acid (10%)	△～◎	△～◎	△～◎	△～○	△～○	△～○
Oil resistance /Chemical resistance	Weak acid	Acetic acid (10%)	△～○	△～○	△～○	○	○	○
Oil resistance /Chemical resistance	Weak acid	Hydrofluoric acid(10%)	×	×	×	×	×	×
Oil resistance /Chemical resistance	Strong alkali	Sodium hydroxide(30%)	△～◎	△～◎	△～◎	×	×	×
Oil resistance /Chemical resistance	Strong alkali	Calcium hydroxide	◎	◎	◎	○	○	○
Oil resistance /Chemical resistance	Weak alkali	Ammonia water	×～○	×～○	×～○	○～◎	○～◎	○～◎
Oil resistance /Chemical resistance	Weak alkali	Magnesium hydroxide	○～◎	○～◎	○～◎	◎	◎	◎
Oil resistance /Chemical resistance	Water		○	○	○	○	○	○

※ The chart is general properties for natural rubber and synthetic rubber we can supply.
These indicated properties are only approximate values used for reference. They are not guaranteed value.
The properties will decrease significantly at maximum or minimum operation temperature.

◎:Optimum ○:Can be used △:Not suitable ×:Cannot be used

	Urethane rubber	Conductive urethane rubber	Fluorine rubber	Conductive Fluorine rubber	Natural rubber	Chloroprene	Conductive chloroprene	Ethylene propylene rubber	Thermoplastic polyurethane
	U	UE	F	FE	NR	CR	CR-E	EPDM	T
	Blue	Black	Black with white dot	Black	Light brown	Black	Black	Black	Semi-transparent pink
	55	60	70	70	55	60	15	50	85
	1.24	1.25	1.82	1.85	0.98	1.39	0.19	1.19	1.18
	◎	○	○	○	△	△	×	△	◎
	◎	○	×	○	◎	◎	×	◎	◎
	◎	◎	△	△	◎	◎	×～△	○	◎
	◎	◎	◎	◎	◎	◎	×	○	◎
	◎	◎	○	○	◎	○	×	△	◎
	◎	◎	○	○	◎	○	×	○	○
	◎	◎	△	△	◎	◎	△	○	◎
	75	75	230	230	120	130	110	120	70
	-55	-55	-34	-34	-70	-30	-30	-40	-70
	△	△	◎	◎	○	○	△	○	△
	◎	◎	◎	◎	○	◎	△	○	○ (Turn yellow)
	◎	◎	◎	◎	×	○	△	◎	○
	×～△	×～△	×～△	×～△	×～△	○	×	×～△	△
	(10^{14})	(10^{9})	(10^{13})	10^{4}～10^{7}	(10^{14})	(10^{13})	(10^{4})	(10^{12})	-
	○～◎	○～◎	◎	◎	×	×～◎	×～◎	×	△～○
	×～△	×～△	△～○	△～○	×	×	×	×	×
	×	×	△～○	△～○	×	×	×	×	×
	△～○	△～○	△～◎	△～◎	◎	◎	◎	◎	△
	△	△	◎	◎	◎	○	○	◎	-
	×～△	×～△	×	×	×	○	○	×	-
	○～◎	○～◎	×～△	×～△	×	△	△	△～×	-
	×	×	×	×	×～△	△～○	△～○	○	×
	×	×	×	×	×～△	△	△	○	×
	×	×	×	×	×～△	△	△	○	×
	×	×	◎	◎	○～◎	◎	◎	◎	◎
	△～○	△～○	◎	◎	○～◎	◎	◎	◎	◎
	×	×	×～○	×～○	△～○	△～○	△～○	○	○
	-	-	△	△	△～○	◎	◎	○	-
	×	×	△	△	○～◎	◎	◎	○～◎	○
	○	○	◎	◎	○～◎	◎	◎	◎	-
	△	△	×～◎	×～◎	△～○	△～◎	△～◎	◎	-
	△	△	◎	◎	◎	◎	◎	◎	-
	×	×	◎	◎	○	○	○	◎	×

※ Even within the operating temperature, the general properties may change according to the cups shape and operating time. Also, the general properties may change according to the operating environment. Please contact us for advice or carry out adequate confirmation and verification in advance.

Shrinkage Allowance of Cup

PBG Series

(mm)

Vacuum pressure (-kPa)	PBG-10A	PBG-15A	PBG-20	PBG-30	PBG-40	PBG-50	PBG-110
20	1.0	6.0	2.7	4.1	10.1	11.0	31.4
26.6	1.2	6.2	3.6	8.0	10.9	12.3	31.6
39.9	1.7	6.4	7.9	10.0	11.3	13.5	32.1
46.6	3.5	6.5	8.0	10.2	11.4	13.9	32.4
53.2	3.8	6.7	8.1	10.4	11.5	14.2	32.8
59.9	3.8	6.7	8.2	10.6	11.6	14.6	32.8
66.5	3.9	6.8	8.3	10.8	11.7	14.9	33.0
73.2	3.9	6.9	8.4	11.0	11.8	15.2	33.2
79.8	4.0	7.0	8.5	11.2	11.9	15.5	33.4
86.5	4.0	7.0	8.6	11.4	12.0	15.8	33.6

PCG Series

(mm)

Vacuum pressure (-kPa)	PCG-5	PCG-7	PCG-10	PCG-15	PCG-18	PCG-20	PCG-30	PCG-40	PCG-60	PCG-90
20	2.1	2.5	2.1	3.2	4.1	7.4	12.2	16.6	26.4	33.9
26.6	2.3	2.6	3.0	4.1	5.3	7.8	12.6	16.9	26.9	38.2
39.9	2.4	2.6	3.1	7.1	7.9	8.1	13.1	17.3	27.7	39.9
46.6	2.4	2.6	3.1	8.1	8.1	8.2	13.3	17.6	28.0	40.1
53.2	2.4	2.7	3.1	8.2	8.2	8.3	13.4	17.9	28.3	40.4
59.9	2.5	2.7	3.1	8.3	8.3	8.4	13.5	18.2	28.6	40.6
66.5	2.5	2.7	3.2	8.3	8.3	8.5	13.6	18.4	28.8	40.8
73.2	2.5	2.7	3.2	8.4	8.4	8.6	13.7	18.5	29.0	41.0
79.8	2.5	2.7	3.3	8.4	8.4	8.7	13.7	18.6	29.2	41.1
86.5	2.5	2.7	3.3	8.5	8.5	8.7	13.8	18.8	29.3	41.2

PJG Series

(mm)

Vacuum pressure (-kPa)	PJG-2	PJG-4	PJG-6	PJG-8	PJG-10	PJG-15	PJG-20	PJG-25	PJG-30	PJG-35	PJG-40	PJG-50	PJG-60	PJG-70	PJG-80
20	0.1	0.4	0.3	0.8	1.1	1.9	2.5	3.5	3.5	4.1	4.0	4.5	5.1	6.3	5.8
26.6	0.2	0.5	0.4	1.0	1.3	2.2	3.2	4.2	3.7	4.2	4.1	4.7	5.4	6.5	6.0
39.9	0.4	0.6	0.6	1.8	1.5	2.4	3.3	4.5	3.9	4.4	4.3	4.9	5.7	7.0	6.3
46.6	0.6	0.7	0.8	2.1	1.6	2.4	3.4	4.6	3.9	4.5	4.4	5.0	5.9	7.2	6.5
53.2	0.6	0.8	0.9	2.1	1.6	2.5	3.5	4.7	4.1	4.5	4.5	5.1	6.0	7.5	6.6
59.9	0.6	1.0	1.4	2.2	1.6	2.5	3.5	4.8	4.3	4.6	4.6	5.1	6.2	7.6	6.7
66.5	0.7	1.2	2.0	2.2	1.7	2.5	3.6	4.8	4.3	4.7	4.6	5.2	6.3	7.8	6.9
73.2	0.7	1.2	2.1	2.3	1.7	2.6	3.7	4.9	4.3	4.8	4.7	5.2	6.4	8.0	7.0
79.8	0.7	1.3	2.2	2.3	1.8	2.6	3.7	5.0	4.3	4.8	4.7	5.3	6.6	8.2	7.1
86.5	0.7	1.3	2.2	2.3	1.8	2.7	3.7	5.1	4.3	4.9	4.8	5.3	6.7	8.4	7.2

PLG Series

(mm)

Vacuum pressure (-kPa)	PLG-20		PLG-30		PLG-40		PLG-50	
	S40	S55	S40	S55	S40	S55	S40	S55
20	15.5	14.9	16.1	15.8	21.3	21.2	20.6	20.4
26.6	15.8	15.4	16.5	16.1	21.8	21.5	21.0	20.6
39.9	16.2	16.0	17.2	16.7	22.4	22.1	21.6	21.1
46.6	16.4	16.2	17.5	17.0	22.7	22.3	21.9	21.4
53.2	16.6	16.4	17.7	17.2	22.9	22.6	22.1	21.6
59.9	16.8	16.5	18.0	17.4	23.1	22.8	22.3	21.8
66.5	17.0	16.6	18.2	17.6	23.3	22.9	22.5	22.0
73.2	17.1	16.7	18.4	17.8	23.4	23.1	22.7	22.1
79.8	17.3	16.9	18.6	18.0	23.6	23.3	22.9	22.3
86.5	17.4	17.0	18.8	18.2	23.7	23.5	23.0	22.5

Suction Cup Precautions

Make sure to read these precautions before use.
Make sure to also read and understand the "Safety Instructions"and "common precautions".

Selection

WARNING

Please confirm the specifications.

The suction cups are designed for use with vacuum. Do not use with any other matter than vacuum pressure. Please do not use at other pressures or temperatures than those specified as it may cause damage or poor operation.

Installation

CAUTION

Please make sure to fasten the suction cup fittings properly so that there is no looseness

If not tightened properly, the suction cups may come off.

Please make sure that there is space to carry out maintenance.

Maintenance

CAUTION

Please make sure to carry out maintenance at regular intervals.

The vacuum suction cups are made of rubber, which means that, depending on the conditions, temperatures, etc., they will degrade in any kind of environment. They will also be worn by gripping and releasing workpieces.
If the suction cups are scratched, cracked or worn, please replace them immediately.

Angles at which suction cups with bellows and swing-type cups can be used for suction

CAUTION

Swing-type suction cups can be used for gripping oblique workpieces if the angle is within a certain limit. Suction cups with bellows can also be used within a certain flexibility range. Please use within the range of limitation.

- **Angle at which swing-type suction cups can be used**

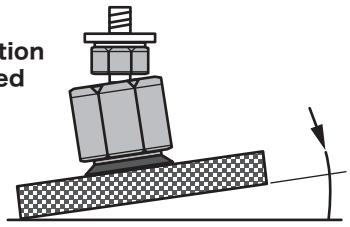

PU:ϕ35 or less: Max 15°
PU:ϕ40 or less: Max 17.5°
PH: Max 17.5°

- **Angle at which bellows suction cups can be used**

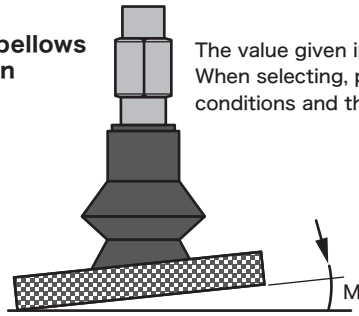

The value given in this figure are approximate.
When selecting, please carefully consider the conditions and the characteristic of the workpiece.

Max. 5°

Vacuum Suction Cup and Fitting

CAUTION

The attachment methods for the suction cups and fittings differ depending on the series and size.

Roughly expressed one can say that the attachment methods are as follows for suction cups and fittings.

①Push-in type

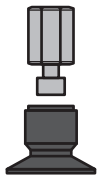

②Screw already attached to the suction cup is screwed into the fitting.

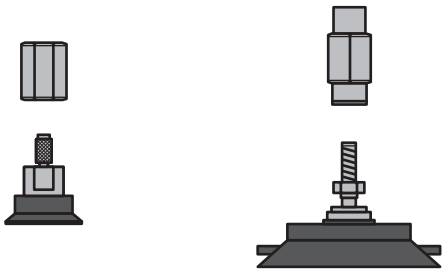

③Suction cup provided with attachment screw.

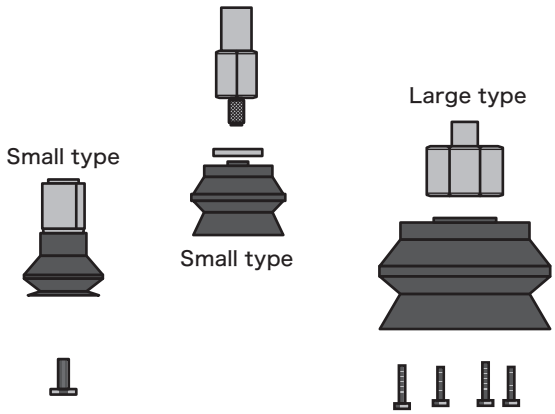

Suction Cup Basic Performance 1

Series	PF	PFO	PU	PA	PQ	PN
Type	Flat type			Thin type		
	Standard	With oily grooves	Swivel type	Flat type	Non-rotation flat type	Flat type
		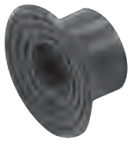				
Workpieces	Workpieces with smooth and even surfaces.		Workpieces whose surfaces are not horizontal.	Workpieces with smooth surfaces that easily change shape.		
Typical workpiece surfaces and shapes ◎: Optimum ○: Can be used △: Not suitable ×: Cannot be used — Flat	◎	◎	◎	○	◎	○
Waved	×	×	×	△	×	△
Oblique	×	×	◎ Note1)	×	×	×
Different heights	×	×	×	×	×	×
Convex	×	×	×	×	×	×
Oily	△	◎	×	△	×	×
Examples of other applicable workpieces				Paper, vinyl, pouch film		
Cup size	ϕ1, ϕ1.5, ϕ2, ϕ3.5, ϕ5, ϕ6, ϕ8, ϕ10, ϕ15, ϕ20, ϕ25, ϕ30, ϕ35, ϕ40, ϕ50, ϕ60, ϕ80, ϕ95, ϕ120, ϕ150, ϕ200 2×4, 2.2×4.2, 3.5×7	ϕ20, ϕ25, ϕ30, ϕ35, ϕ40	ϕ10, ϕ15, ϕ20, ϕ25, ϕ30, ϕ35, ϕ40, ϕ50, ϕ60, ϕ80, ϕ100, ϕ120, ϕ150, ϕ200	ϕ5, ϕ10, ϕ15, ϕ20, ϕ25, ϕ30, ϕ40, ϕ50	ϕ6, ϕ8, ϕ10	ϕ15, ϕ17, ϕ17.6, ϕ18, ϕ20, ϕ23, ϕ24, ϕ24.8, ϕ25, ϕ27, ϕ31, ϕ34, ϕ35, ϕ40, ϕ49
Fitting — Compact fixed fitting	●	-	-	-	-	-
Fixed fitting	●	●	●	●	-	●
Compact spring fitting	●	-	-	●	-	-
Spring fitting	●	●	●	●	-	●
Non-rotation spring fitting	●	●	-	●	●	●
Standard rubber material	NBR／Silicone Fluorine／Urethane Conductive NBR Conductive silicone	NBR／Silicone	NBR／Silicone Fluorine／Urethane	NBR／Silicone Fluorine／ Conductive NBR Conductive silicone	NBR／Silicone Fluorine／Urethane Conductive NBR Conductive silicone	NBR／Silicone Fluorine／Urethane Natural
Remarks			Note1) Oblique angle that can be gripped：5°			
Page	P.277	P.309	P.459	P.177	P.441	P.395

	PN-B	PJ	PB	PC	PL	PH	PW
	Bellows type					Deep type	Oval type
	2 bellows type	2 bellows type	2 bellows type	3 bellows type	Multiple bellows type		
	For pouch film	With thin lip	With thick lip			With great internal depth	With long and round shape
		When there is no space for attaching spring type suction cups. When the suction surface is oblique.			For uneven or soft workpieces.	Workpieces whose suction surface are uneven.	Where gripping space is limited and when lifting force is desired.
	○	◎	◎	◎	◎	◎	◎
	○	◎	◎	◎	◎	×	×
	×	◎ Note2)	◎ Note2)	◎ Note2)	◎	×	×
	×	×	×	×	×	×	×
	×	△	△	◎	△	◎	×
	×	×	△	×	×	×	△
					Food pack	Sphere	
	ϕ18, ϕ25, ϕ35	ϕ2, ϕ4, ϕ6, ϕ8, ϕ10, ϕ15, ϕ20, ϕ25, ϕ30, ϕ35, ϕ40, ϕ50, ϕ60, ϕ70, ϕ80	ϕ10, ϕ15, ϕ20, ϕ30, ϕ40, ϕ50, ϕ75, ϕ110, ϕ150	ϕ3, ϕ3.5, ϕ5, ϕ7, ϕ10, ϕ15, ϕ18, ϕ20, ϕ30, ϕ40, ϕ60, ϕ90	ϕ20, ϕ30, ϕ40, ϕ50	ϕ30, ϕ45, ϕ65, ϕ90	3.5×7, 4×10, 4×20, 4×30, 5×10, 5×20, 5×30, 6×10, 6×20, 6×30, 8×20, 8×30
	-	●	-	●	-	-	-
	●	●	●	●	●	●	●
	-	●	●	●	-	-	-
	-	●	●	●	-	●	-
	-	●	●	●	-	●	●
	NBR／Silicone Fluorine／Urethane Natural	NBR／Silicone Fluorine／ Urethane Conductive NBR Conductive silicone	NBR／Silicone Fluorine／Urethane Conductive NBR Conductive silicone	NBR／Silicone	Silicone	NBR／Silicone	NBR／Silicone Urethane
		Note2) Oblique angle that can be gripped：5°	Note2) Oblique angle that can be gripped：5°	Note2) Oblique angle that can be gripped：5°		For gripping spherical diameters ：P.165	
	P.427	P.335	P.201	P.225	P.389	P.323	P.483

Shrinkage allowance → P.169
Theoretical lifting force (suction force) → P.166
Calculation of cup diameter → P.165
Applications List for Major Suction Cup Materials → P.167
Physical property → P.167
Selection of suction cup fittings → P.165

Suction Cup Basic Performance 2

Series	PCD	PD	PR	PK2	PK2B	PK2L
Type	Ring type	Foam type	Type for round bar	High durability		
	Suction surface is ring-shaped	Made of foam (sponge)	Suction surface is cylindrical shaped	Standard	Bellows type	Oval type
				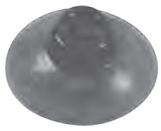		
Workpieces	Workpieces that are ring shaped, such as CD and DVD discs.	For gripping uneven workpieces with surfaces such as those of block tiles.	For gripping workpieces with cylindrical shape.	For cardboard, construction materials, automobile steel sheets etc.		
Typical workpiece surfaces and shapes ◎: Optimum ○: Can be used △: Not suitable ×: Cannot be used — Flat	◎ Ring-shaped	◎	×	◎	◎	◎
Waved	×	○	×	×	×	×
Oblique	×	×	×	×	○	×
Different heights	×	◎	×	×	×	×
Convex	×	○	◎ Cylindrical shaped	△	△	△
Oily	×	×	×	○	○	○
Examples of other applicable workpieces	CD／DVD	Striped metal sheets	Round rods, pipes	Cardboard／construction materials／automobile steel sheets/pressed objects		
Cup size	ϕ19, ϕ20, ϕ23, ϕ29.5, ϕ34, ϕ38, ϕ46	ϕ4, ϕ6.5, ϕ8, ϕ9.5, ϕ12, ϕ15, ϕ20, ϕ30, ϕ40, ϕ50, ϕ60, ϕ70, ϕ80, ϕ100	9.5×25, 12.5×23, 15×30, 32×32	ϕ10, ϕ15, ϕ20, ϕ25, ϕ30, ϕ40, ϕ50, ϕ60, ϕ80, ϕ100, ϕ120, ϕ150	ϕ10, ϕ20, ϕ30, ϕ40, ϕ60, ϕ80, ϕ100, ϕ120, ϕ150	60×20, 80×30, 100×40
Fitting — Compact fixed fitting	-	-	-	-	-	-
Fixed fitting	●	●	●	●	●	●
Compact spring fitting	-	-	-	-	-	-
Spring fitting	-	●	●	-	-	-
Non-rotation spring fitting	-	●	●	-	-	-
Standard rubber material	NBR／Silicone	CR／CR-E	NBR／Silicone	TPU (Thermoplastic polyurethane)	TPU (Thermoplastic polyurethane)	TPU (Thermoplastic polyurethane)
Remarks			Diameter of suction cups for round bar : P.165			
Page	P.251	P.259	P.447	P.367	P.373	P.381

	RA		CORE	PP	SM		
	Mark-free			Cube type	React with metal detector		
	RA treatment (Reduce the marks to the limit)		Core for cup				
	Standard	Bellows type	For PJ series	Super small with square shaped			
				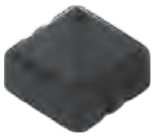			
	For workpieces that are sensitive to marks.		Besides being mark free it also prevents deformation of thin workpieces and adhesion.	Used exclusively for gripping small objects such as semiconductor chips.	For detecting the cup fragments by the metal detector.		
	◎	◎	◎	◎	Refer to each suction cup series		
	×	×	×	×			
	×	◎ Note2)	×	×			
	×	×	×	×			
	×	×	×	×			
	×	×	×	×			
	Semiconductor chips／Glass			Semiconductor chips	Food／Food packing		
	ϕ1～60			0.55×0.55, 0.5×1.3, 0.8×1.6, 1.3×2.8, 2.0×2.8	ϕ1.5～50		
	Reference each series	Reference each series		-	●		
				●	●		
				-	●		
				-	●		
				-	●		
	Mark free rubber Conductive mark free rubber	Mark free rubber Conductive mark free rubber		Fluorine／Conductive fluorine	Silicone metal		
		Note2) Oblique angle that can be gripped：5°					
	P.497	P.497	P.363	P.435	P.499		

Shrinkage allowance → P.169
Theoretical lifting force (suction force) → P.166
Calculation of cup diameter → P.165
Applications List for Major Suction Cup Materials → P.167
Physical property → P.167
Selection of suction cup fittings → P.165

PA Series

Cup with Thin Lip

02 Suction Cup
PA
PB
PC
PCD
PD
PF
PFO
PH
PJ
CORE
PK2
PK2B
PK2L
PL
PN
PN-B
PP
PQ
PR
PU
PW
RA
SM
TN

RoHS

The cup with thin lip. Suitable for smooth and pliable workpieces like paper or vinyl sheets!

Paper

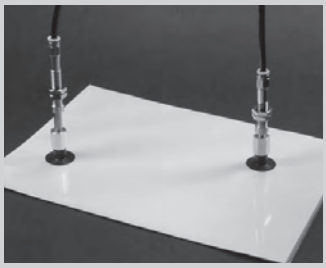

Vinyl

Wafer

Wide range of cup sizes.

ϕ5 | ϕ10 | ϕ15 | ϕ20 | ϕ25 | ϕ30 | ϕ40 | ϕ50

Various fittings for many kinds of applications.

Fixed fitting

Spring fitting

Compact type fitting

Suction Cup

PAG	Cup size (mm) ϕ 5 ~ 50		P.179

Fitting

Type	Applicable cup size (mm)	Stroke (mm)	Vacuum port	Piping・Connector	Page
Cup with fixed fitting PATK	ϕ 10 ~ 50	N/A	Top	Barb	P.183
Cup with fixed fitting PAYK	ϕ 10 ~ 50	N/A	Side	Barb	P.183
Cup with compact spring fitting PSS	ϕ 10 ~ 20	3, 5	Top	Male screw	P.187
Cup with spring fitting NAPATS	ϕ 10 ~ 20	3, 10, 15	Top	Female screw Push-in Barb	P.189
	ϕ 25 ~ 50	6, 15, 30			
Cup with spring fitting NAPAYS	ϕ 10 ~ 20	3, 10, 15	Side	Female screw Push-in Barb	P.189
	ϕ 25 ~ 50	6, 15, 30			
Cup with non-rotation spring fitting NAPATH	ϕ 10 ~ 20	3, 10, 15	Top	Female screw Push-in Barb	P.195
	ϕ 25 ~ 50	6, 15, 30			
Cup with non-rotation spring fitting NAPAYH	ϕ 10 ~ 20	3, 10, 15	Side	Female screw Push-in Barb	P.195
	ϕ 25 ~ 50	6, 15, 30			
Setting screw	ϕ5 ~ 20, ϕ30	—	—	—	P.503

Suction Cup Selection Guide P.163

PAG Cup with Thin Lip

How to Order

PAG – 10A – N
① ②

① Cup Size (mm)

Symbol	Cup size	Symbol	Cup size
5B	ϕ5	20B	ϕ20
10A	ϕ10	25	ϕ25
10B	ϕ10	30	ϕ30
15A	ϕ15	30B	ϕ30
15B	ϕ15	40	ϕ40
20A	ϕ20	50	ϕ50

② Cup Rubber Material

Symbol	Material
N	NBR(Nitrile rubber)
S	Silicone rubber
F	Fluorine rubber
NE	Conductive NBR (Nitrile rubber)
SE	Conductive silicone rubber

※ Please consult with us for other material.

Cup Rubber Material Standard Specifications

Symbol	Material	Hardness (A/s)	Ambient temperature (℃)	Color	Volume resistivity Note1.2
N	NBR (Nitrile rubber)	55	-26～120	Black	-
S	Silicone rubber	55	-60～250	Translucent white	-
F	Fluorine rubber	70	-10～230	Black with white dot	-
NE	Conductive NBR (Nitrile rubber)	70	-26～120	Black with blue dot	10^2～10^3 Ω・cm
SE	Conductive silicone rubber	55	-60～250	Black with red dot	10^2～10^4 Ω・cm

Note1) Volume resistivity shows conductivity, resistance value is per cm^3.
Note2) It is the measured value of in our designated test piece.

Applicable Rubber Material Table

Material	Color	Symbol	Round type											
			5B	10A	10B	15A	15B	20A	20B	25	30	30B	40	50
NBR(Nitrile rubber)	Black	N	●	●	●	●	●	●	●	●	●	●	●	●
Silicone rubber	Translucent white	S	●	●	●	●	●	●	●	●	●	●	●	●
Fluorine rubber	Black with white dot	F	●	●	●	●	●	●	●	●	●	●	●	●
Conductive NBR (Nitrile rubber)	Black with blue dot	NE	●	●	●	●	●	●	●	○	○	○	○	○
Conductive silicone rubber	Black with red dot	SE	●	●	●	●	●	●	●	○	○	○	○	○

●: In stock ○Made to order ×: None
※Please consult with us for other material.

Dimensions

(mm)

PAG-5B

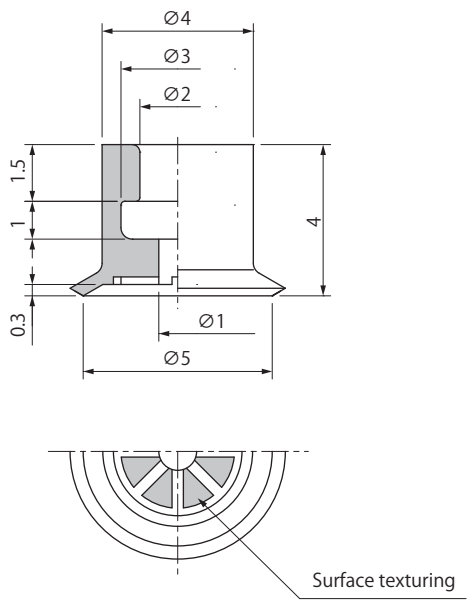

PAG-10A

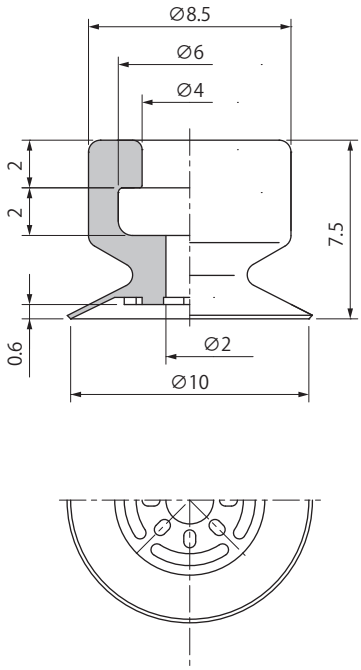

PAG-10B

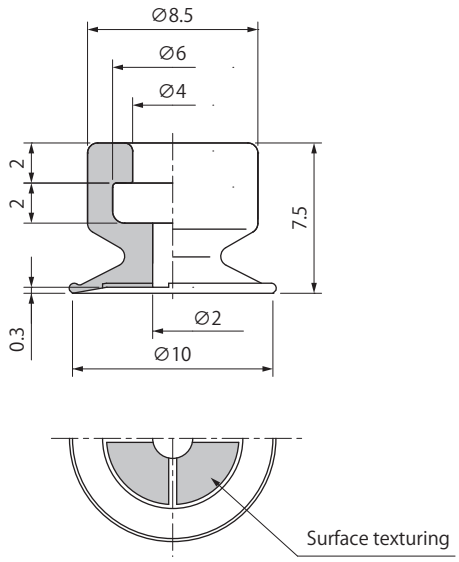

PAG-15A

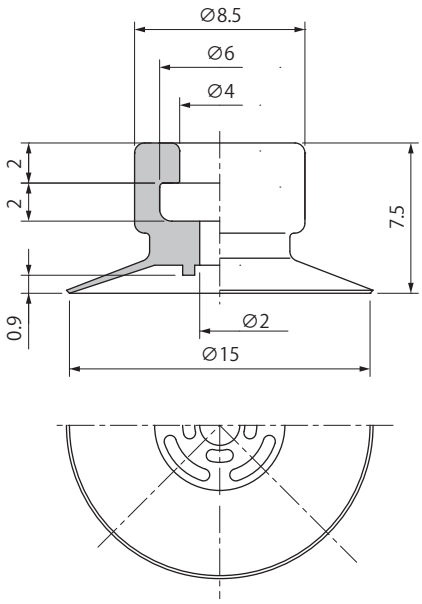

Weight

(g)

Model＼Material	N	S	F	NE	SE	Applicable setting screw (Screws specifications)
PAG-5B	0.1	0.1	0.1	0.1	0.1	TN-PS-2A-M3 (Male M3X0.5) TN-PS-2A-M3F (Female M3X0.5) TN-PS-2A-M5 (Male M5X0.8)
PAG-10A	0.3	0.3	0.5	0.3	0.3	TN-PS-10-M5 (Male M5X0.8) TN-PS-10-M5F (Female M5X0.8)
PAG-10B	0.3	0.3	0.5	0.4	0.3	
PAG-15A	0.4	0.4	0.6	0.4	0.4	

※Please refer to P.503 for setting screw detailed specifications.

Symbol	Material
N	NBR(Nitrile rubber)
S	Silicone rubber
F	Fluorine rubber
NE	Conductive NBR (Nitrile rubber)
SE	Conductive silicone rubber

PAG Cup with Thin Lip

Dimensions

(mm)

PAG-15B

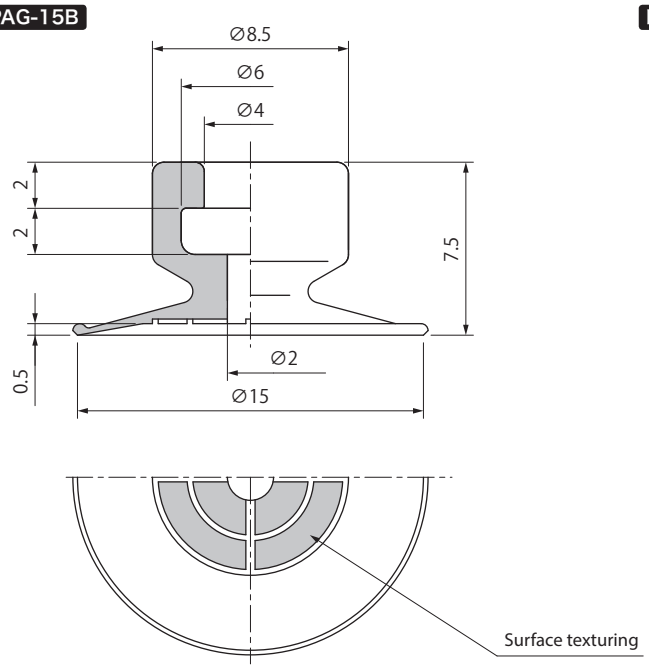

PAG-20A

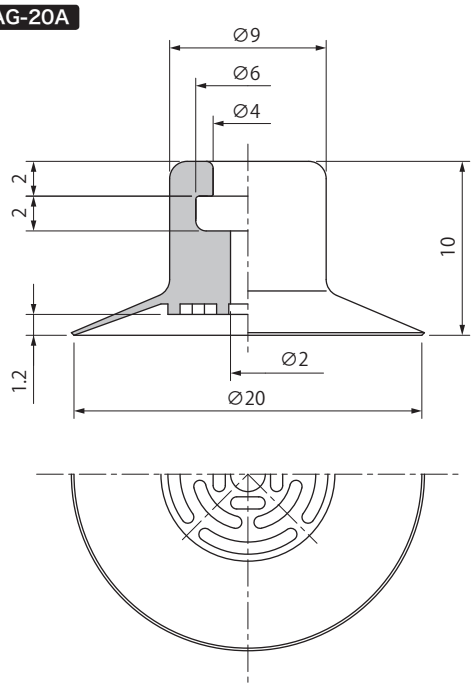

PAG-20B

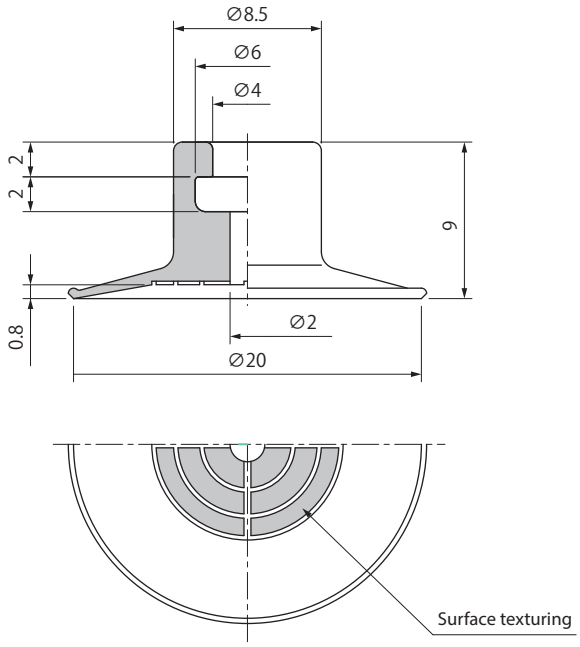

PAG-25

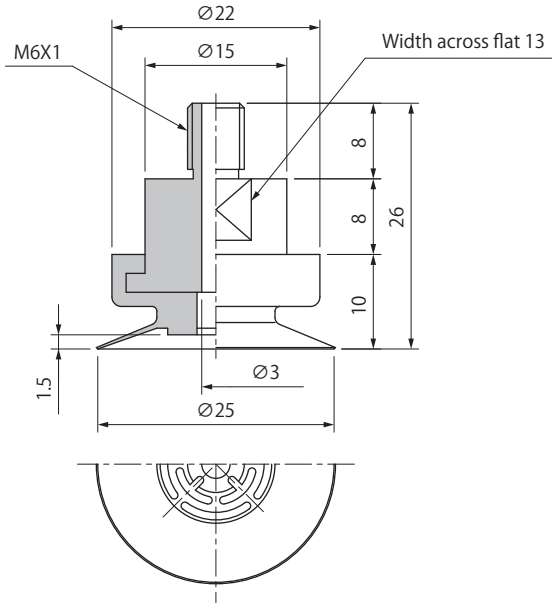

Weight

(g)

Model ＼ Material	N	S	F	NE	SE	Applicable setting screw (Screws specifications)
PAG-15B	0.4	0.4	0.6	0.4	0.4	TN-PS-10-M5 (Male M5X0.8) TN-PS-10-M5F (Female M5X0.8)
PAG-20A	0.6	0.6	1.0	0.7	0.6	
PAG-20B	0.7	0.7	1.1	0.7	0.7	
PAG-25	19.6	19.6	20.8	19.7	19.6	-

※Please refer to P.503 for setting screw detailed specifications.

Symbol	Material
N	NBR(Nitrile rubber)
S	Silicone rubber
F	Fluorine rubber
NE	Conductive NBR (Nitrile rubber)
SE	Conductive silicone rubber

Dimensions

(mm)

PAG-30

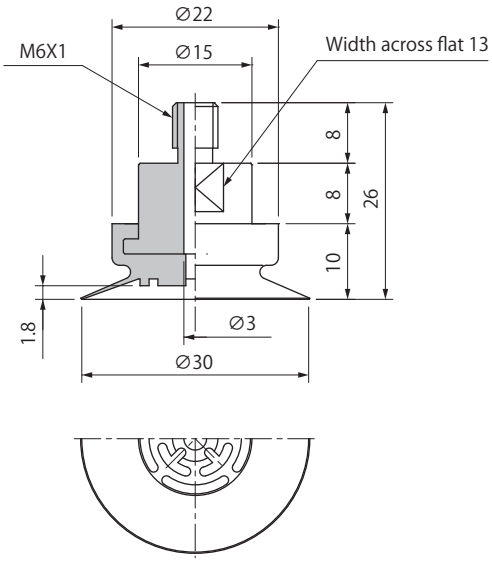

PAG-30B

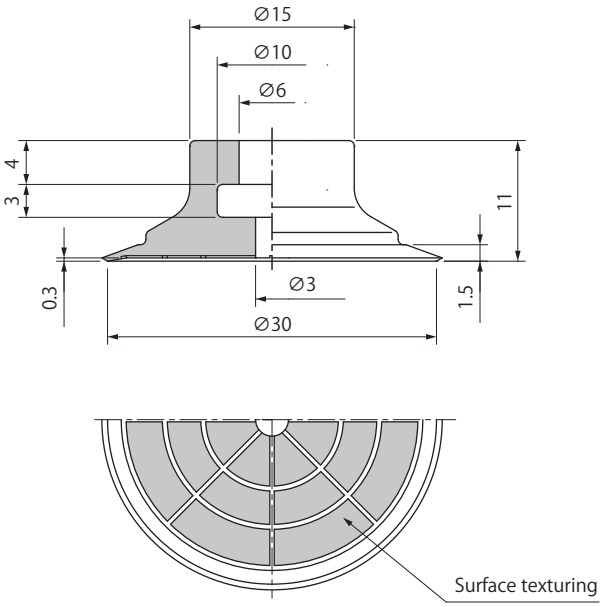

PAG-40

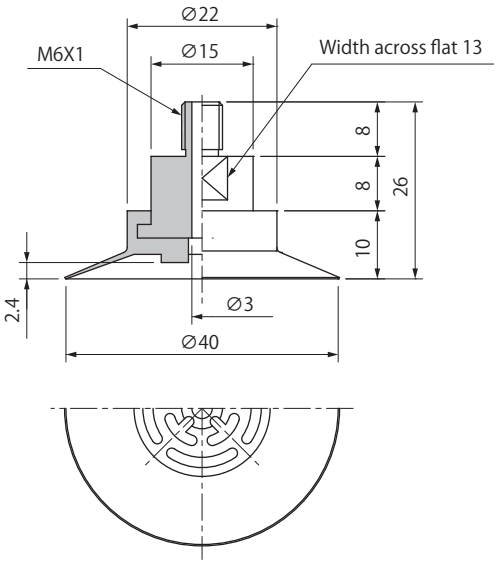

PAG-50

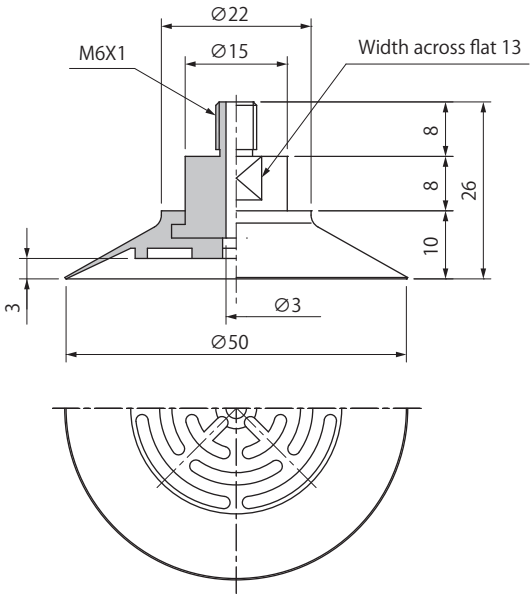

Weight

(g)

Model ＼ Material	N	S	F	NE	SE	Applicable setting screw (Screws specifications)
PAG-30	19.9	19.9	21.3	20.1	19.9	-
PAG-30B	3.1	3.1	5.0	3.3	3.1	TN-PA-30-M6 (Male M6X1.0)
PAG-40	20.0	20.0	21.4	20.2	20.0	-
PAG-50	22.0	22.0	24.6	22.3	22.0	

※Please refer to P.503 for setting screw detailed specifications.

Symbol	Material
N	NBR(Nitrile rubber)
S	Silicone rubber
F	Fluorine rubber
NE	Conductive NBR (Nitrile rubber)
SE	Conductive silicone rubber

PATK·YK Cup with Fixed Fitting

Consisting of fitting, setting screw, suction cup.

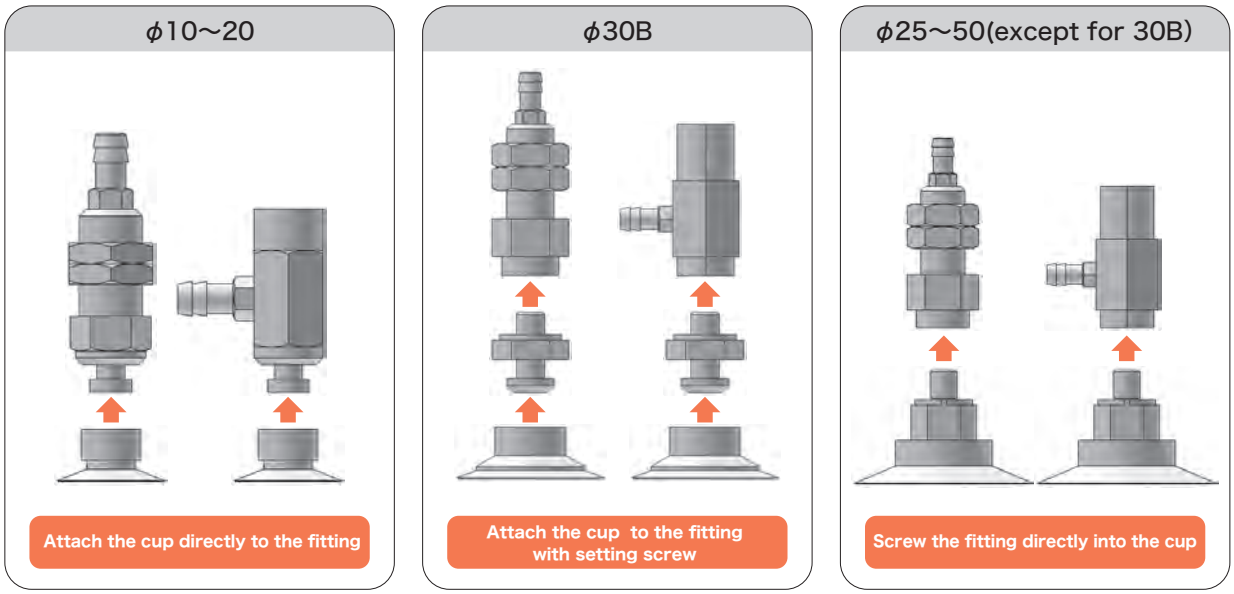

How to Order

PA T K – 10A – N
① ② ③

① Vacuum Port

T	Top
Y	Side

② Cup Size (mm)

Symbol	Cup size	Symbol	Cup size
10A	ϕ10	25	ϕ25
10B	ϕ10	30	ϕ30
15A	ϕ15	30B	ϕ30
15B	ϕ15	40	ϕ40
20A	ϕ20	50	ϕ50
20B	ϕ20		

③ Cup Rubber Material

Symbol	Material
N	NBR(Nitrile rubber)
S	Silicone rubber
F	Fluorine rubber
NE	Conductive NBR(Nitrile rubber)
SE	Conductive silicone rubber

※ Please consult with us for other material.

Combination Table

Top Port

Model number	Cup	Setting screw	Fitting	Piping specifications	
PATK-10A-□	PAG-10A-□	Attach the cup directly to the fitting	PFTK-10A-K	Barb	ϕ 6X4
PATK-10B-□	PAG-10B-□				
PATK-15A-□	PAG-15A-□				
PATK-15B-□	PAG-15B-□				
PATK-20A-□	PAG-20A-□				
PATK-20B-□	PAG-20B-□				
PATK-25-□	PAG-25-□	Screw the fitting directly into the male screw in the cup	PATK-25-K		
PATK-30-□	PAG-30-□				
PATK-30B-□	PAG-30B-□	TN-PA-30-M6			
PATK-40-□	PAG-40-□	Screw the fitting directly into the male screw in the cup			
PATK-50-□	PAG-50-□				

※□ in the table indicates the cup material.

Side Port

Model number	Cup	Setting screw	Fitting	Piping specifications	
PAYK-10A-□	PAG-10A-□	Attach the cup directly to the fitting	PFYK-5A-K	Barb	ϕ 6X4
PAYK-10B-□	PAG-10B-□				
PAYK-15A-□	PAG-15A-□				
PAYK-15B-□	PAG-15B-□				
PAYK-20A-□	PAG-20A-□				
PAYK-20B-□	PAG-20B-□				
PAYK-25-□	PAG-25-□	Screw the fitting directly into the male screw in the cup	PAYK-25-K		
PAYK-30-□	PAG-30-□				
PAYK-30B-□	PAG-30B-□	TN-PA-30-M6			
PAYK-40-□	PAG-40-□	Screw the fitting directly into the male screw in the cup			
PAYK-50-□	PAG-50-□				

※□ in the table indicates the cup material.

PATK·YK Cup with Fixed Fitting

Dimensions

(mm)

Top Port PATK-10A/10B/15A/15B

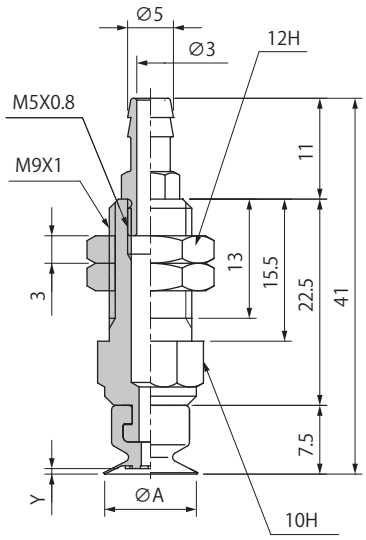

Model number	A	Y	Weight (g)
PATK-10A- □	10	0.6	15
PATK-10B- □		0.3	
PATK-15A- □	15	0.9	
PATK-15B- □		0.5	

※□ in the table indicates the cup material.
※ The weight value is when NBR（Nitrile rubber）selected.

Top Port PATK-20A/20B

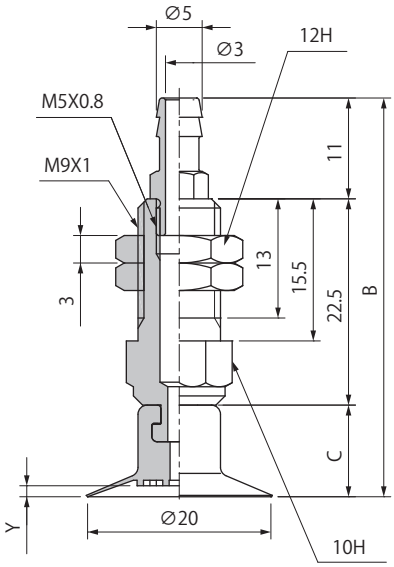

Model number	B	C	Y	Weight (g)
PATK-20A- □	43.5	10	1.2	16
PATK-20B- □	42.5	9	0.8	

※□ in the table indicates the cup material.
※ The weight value is when NBR（Nitrile rubber）selected.

Top Port PATK-25/30/40/50

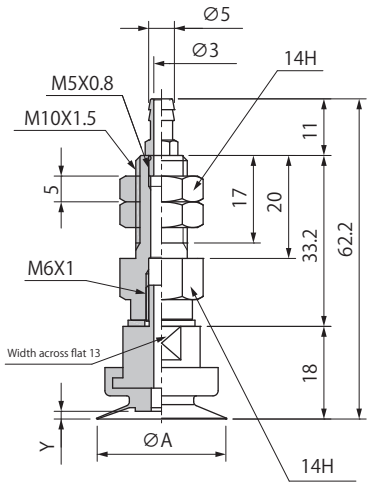

Model number	A	Y	Weight (g)
PATK-25- □	25	1.5	54
PATK-30- □	30	1.8	55
PATK-40- □	40	2.4	
PATK-50- □	50	3	56

※□ in the table indicates the cup material.
※ The weight value is when NBR（Nitrile rubber）selected.

Top Port PATK-30B

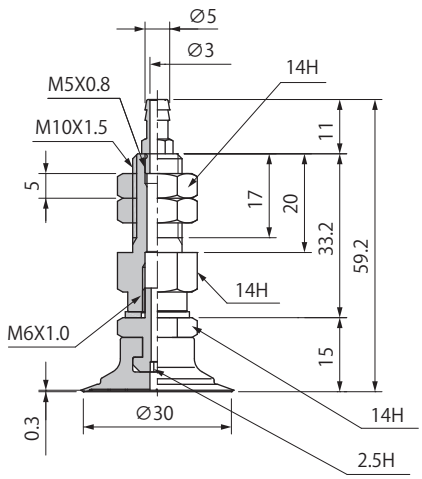

Model number	Weight (g)
PATK-30B- □	63

※□ in the table indicates the cup material.
※ The weight value is when NBR（Nitrile rubber）selected.

Dimensions

(mm)

Side Port PAYK-10A/10B/15A/15B

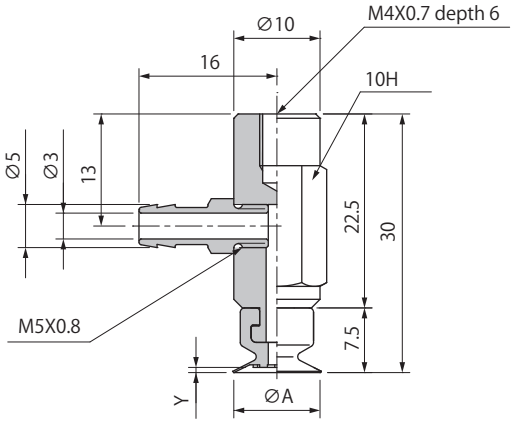

Model number	A	Y	Weight (g)
PAYK-10A- □	10	0.6	16
PAYK-10B- □		0.3	
PAYK-15A- □	15	0.9	
PAYK-15B- □		0.5	

※□ in the table indicates the cup material.
※ The weight value is when NBR（Nitrile rubber）selected.

Side Port PAYK-20A/20B

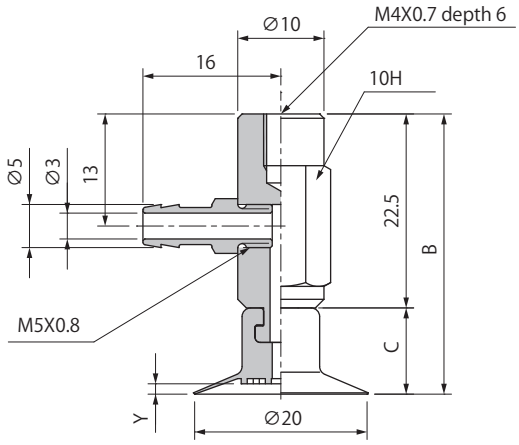

Model number	B	C	Y	Weight (g)
PAYK-20A- □	32.5	10	1.2	17
PAYK-20B- □	31.5	9	0.8	

※※□ in the table indicates the cup material.
※ The weight value is when NBR（Nitrile rubber）selected.

Side Port PAYK-25/30/40/50

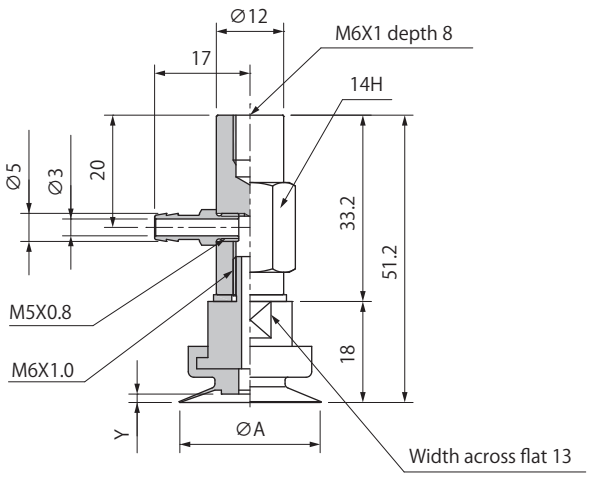

Model number	A	Y	Weight (g)
PAYK-25- □	25	1.5	54
PAYK-30- □	30	1.8	55
PAYK-40- □	40	2.4	
PAYK-50- □	50	3	56

※□ in the table indicates the cup material.
※ The weight value is when NBR（Nitrile rubber）selected.

Side Port PAYK-30B

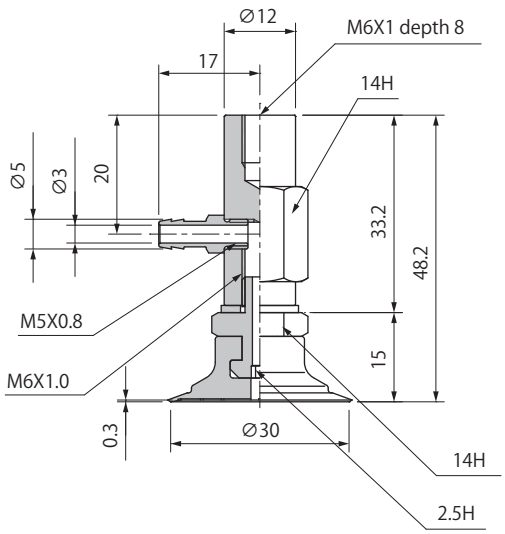

Model number	Weight (g)
PAYK-30B- □	63

※□ in the table indicates the cup material.
※ The weight value is when NBR（Nitrile rubber）selected.

PSS Cup with Compact Spring Fitting

Simple construction of the cup and the fitting.

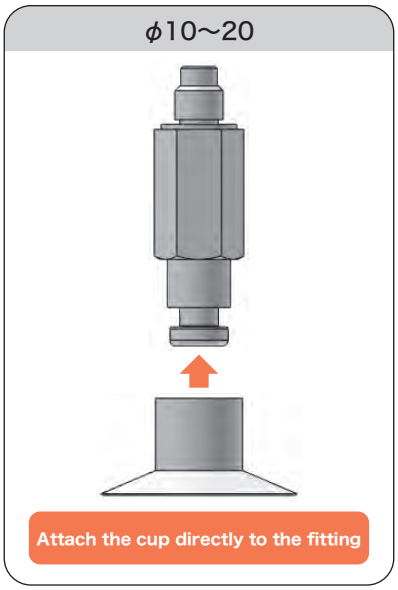

How to Order

PSS – L3 – PAG – 10A – N

① ② ③

① Stroke (mm)

Symbol	Length
L3	3
L5	5

② Cup Size (mm)

Symbol	Cup size
10A	ϕ10
15A	ϕ15
20A	ϕ20

③ Cup Rubber Material

Symbol	Material
N	NBR (Nitrile rubber)
S	Silicone rubber
F	Fluorine rubber
NE	Conductive NBR (Nitrile rubber)
SE	Conductive silicone rubber

※ Please consult with us for other material.

Combination Table

Model number	Cup	Fitting	Piping specifications
PSS-L3-PAG-10A-□	PAG-10A-□	PSS-L3	M5X0.8 (Male)
PSS-L3-PAG-15A-□	PAG-15A-□		
PSS-L3-PAG-20A-□	PAG-20A-□		
PSS-L5-PAG-10A-□	PAG-10A-□	PSS-L5	
PSS-L5-PAG-15A-□	PAG-15A-□		
PSS-L5-PAG-20A-□	PAG-20A-□		

※□in the table indicates the cup material.

Spring Specifications

Cup Size	Unit	ϕ10～ϕ20	
Stroke	mm	3	5
Spring load at 0 stroke	N	1.5	1.62
Spring load at full stroke	N	2.3	3.2
Tightening torque	N・m	0.58～0.68	

※ Due to structural reason,「lift-up」may occur in case vacuum pressure is more than -65kPa. The weight of non「lift-up」in horizontal lifting is about over 200g.
Screw must be tightened in recommended tightening torque, otherwise malfunction would occur.

Dimensions

(mm)

PSS-L3-PAG-10A/15A

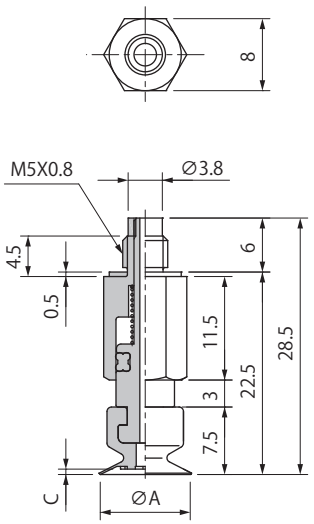

Model number	A	C	Weight (g)
PSS-L3-PAG-10A-□	10	0.6	10
PSS-L3-PAG-15A-□	15	0.9	

※□ in the table indicates the cup material.
※ The weight value is when NBR (Nitrile rubber) selected.

PSS-L3-PAG-20A

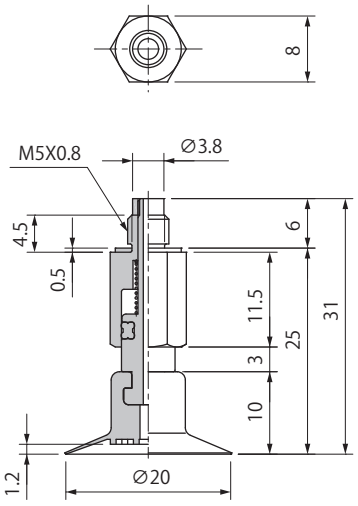

Model number	Weight (g)
PSS-L3-PAG-20A-□	13

※□ in the table indicates the cup material.
※ The weight value is when NBR (Nitrile rubber) selected.

PSS-L5-PAG-10A/15A

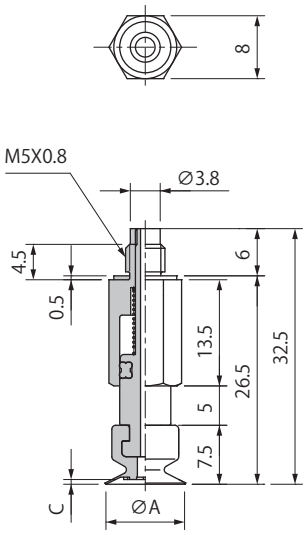

Model number	A	C	Weight (g)
PSS-L5-PAG-10A-□	10	0.6	11
PSS-L5-PAG-15A-□	15	0.9	

※□ in the table indicates the cup material.
※ The weight value is when NBR (Nitrile rubber) selected.

PSS-L5-PAG-20A

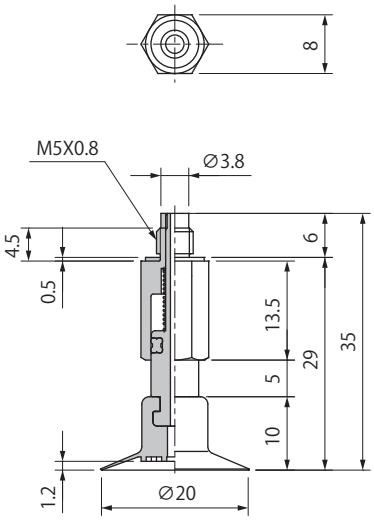

Model number	Weight (g)
PSS-L3-PAG-20A-□	14

※□ in the table indicates the cup material.
※ The weight value is when NBR (Nitrile rubber) selected.

NAPATS·YS Cup with Spring Fitting

Consisting of fitting, setting screw, suction cup.

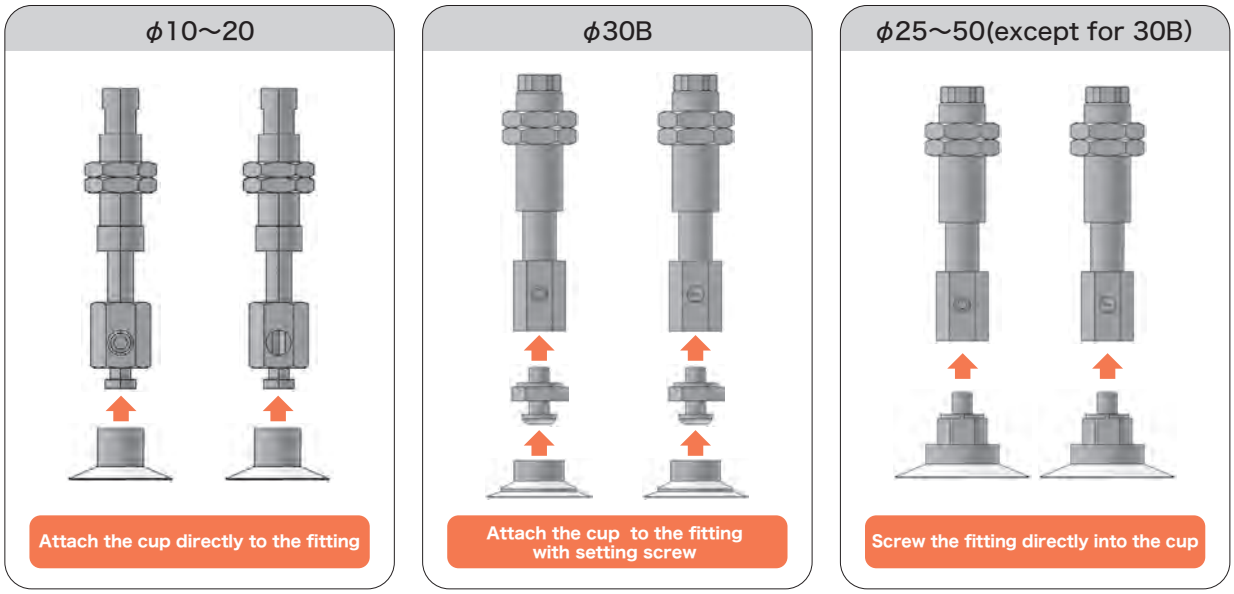

How to Order

NAPA **T** S – **10A – 3** – **N** – **T**

① ② ③ ④

① Vacuum Port

T	Top
Y	Side

② Cup Size - Stroke (mm)

Symbol	Cup size Stroke	Symbol	Cup size Stroke	Symbol	Cup size Stroke
10A-3	ϕ10-3	20A-3	ϕ20-3	30B-6	ϕ30-6
10A-10	ϕ10-10	20A-10	ϕ20-10	30B-15	ϕ30-15
10A-15	ϕ10-15	20A-15	ϕ20-15	30B-30	ϕ30-30
10B-3	ϕ10-3	20B-3	ϕ20-3	40-6	ϕ40-6
10B-10	ϕ10-10	20B-10	ϕ20-10	40-15	ϕ40-15
10B-15	ϕ10-15	20B-15	ϕ20-15	40-30	ϕ40-30
15A-3	ϕ15-3	25-6	ϕ25-6	50-6	ϕ50-6
15A-10	ϕ15-10	25-15	ϕ25-15	50-15	ϕ50-15
15A-15	ϕ15-15	25-30	ϕ25-30	50-30	ϕ50-30
15B-3	ϕ15-3	30-6	ϕ30-6		
15B-10	ϕ15-10	30-15	ϕ30-15		
15B-15	ϕ15-15	30-30	ϕ30-30		

③ Cup Rubber Material

Symbol	Material
N	NBR (Nitrile rubber)
S	Silicone rubber
F	Fluorine rubber
NE	Conductive NBR (Nitrile rubber)
SE	Conductive silicone rubber

※ Please consult with us for other material.

④ Connector

Blank	N/A
T	Barb
O	Push-in

Spring Specifications

Cup Size	Unit	ϕ10~20			ϕ25~50		
Stroke	mm	3	10	15	6	15	30
Spring load at 0 stroke	N	0.61		0.64	2.45		2.9
Spring load at full stroke	N	0.77	1.17		3.43	4.9	5.88

Combination Table

Model number	Cup	Setting screw	Fitting	Piping specifications		
				Without connector・Blank	Barb connector・T	Push-in connector・O
NAPA○S-10A-3-□ (-T/O)	PAG-10A-□	Attach the cup directly to the fitting	NAPF○S-10A-3-K (-T/O)	M5X0.8 (Female)	ϕ 6 X 4	
NAPA○S-10A-10-□ (-T/O)			NAPF○S-10A-10-K (-T/O)			
NAPA○S-10A-15-□ (-T/O)			NAPF○S-10A-15-K (-T/O)			
NAPA○S-10B-3-□ (-T/O)	PAG-10B-□		NAPF○S-10A-3-K (-T/O)			
NAPA○S-10B-10-□ (-T/O)			NAPF○S-10A-10-K (-T/O)			
NAPA○S-10B-15-□ (-T/O)			NAPF○S-10A-15-K (-T/O)			
NAPA○S-15A-3-□ (-T/O)	PAG-15A-□		NAPF○S-10A-3-K (-T/O)			
NAPA○S-15A-10-□ (-T/O)			NAPF○S-10A-10-K (-T/O)			
NAPA○S-15A-15-□ (-T/O)			NAPF○S-10A-15-K (-T/O)			
NAPA○S-15B-3-□ (-T/O)	PAG-15B-□		NAPF○S-10A-3-K (-T/O)			
NAPA○S-15B-10-□ (-T/O)			NAPF○S-10A-10-K (-T/O)			
NAPA○S-15B-15-□ (-T/O)			NAPF○S-10A-15-K (-T/O)			
NAPA○S-20A-3-□ (-T/O)	PAG-20A-□		NAPF○S-10A-3-K (-T/O)			
NAPA○S-20A-10-□ (-T/O)			NAPF○S-10A-10-K (-T/O)			
NAPA○S-20A-15-□ (-T/O)			NAPF○S-10A-15-K (-T/O)			
NAPA○S-20B-3-□ (-T/O)	PAG-20B-□		NAPF○S-10A-3-K (-T/O)			
NAPA○S-20B-10-□ (-T/O)			NAPF○S-10A-10-K (-T/O)			
NAPA○S-20B-15-□ (-T/O)			NAPF○S-10A-15-K (-T/O)			
NAPA○S-25-6-□ (-T/O)	PAG-25-□	Screw the fitting directly into the male screw in the cup	NAPA○S-25-6-K (-T/O)			
NAPA○S-25-15-□ (-T/O)			NAPA○S-25-15-K (-T/O)			
NAPA○S-25-30-□ (-T/O)			NAPA○S-25-30-K (-T/O)			
NAPA○S-30-6-□ (-T/O)	PAG-30-□		NAPA○S-25-6-K (-T/O)			
NAPA○S-30-15-□ (-T/O)			NAPA○S-25-15-K (-T/O)			
NAPA○S-30-30-□ (-T/O)			NAPA○S-25-30-K (-T/O)			
NAPA○S-30B-6-□ (-T/O)	PAG-30B-□	TN-PA-30-M6	NAPA○S-25-6-K (-T/O)			
NAPA○S-30B-15-□ (-T/O)			NAPA○S-25-15-K (-T/O)			
NAPA○S-30B-30-□ (-T/O)			NAPA○S-25-30-K (-T/O)			
NAPA○S-40-6-□ (-T/O)	PAG-40-□	Screw the fitting directly into the male screw in the cup	NAPA○S-25-6-K (-T/O)			
NAPA○S-40-15-□ (-T/O)			NAPA○S-25-15-K (-T/O)			
NAPA○S-40-30-□ (-T/O)			NAPA○S-25-30-K (-T/O)			
NAPA○S-50-6-□ (-T/O)	PAG-50-□		NAPA○S-25-6-K (-T/O)			
NAPA○S-50-15-□ (-T/O)			NAPA○S-25-15-K (-T/O)			
NAPA○S-50-30-□ (-T/O)			NAPA○S-25-30-K (-T/O)			

※□ in the table indicates the cup material.
※○ in the table indicates the vacuum port (T or Y).

NAPATS·YS Cup with Spring Fitting

Dimensions

(mm)

NAPAT/YS-10A

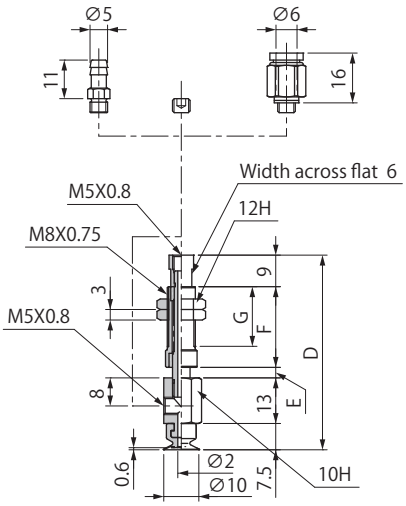

Model number	D	E	F	G	Weight(g)
NAPAT/YS-10A-3 □ (-T/O)	55.5	3	23	17	18
NAPAT/YS-10A-10- □ (-T/O)	62.5	10			18.5
NAPAT/YS-10A-15- □ (-T/O)	75	15	30.5	24.5	21

※□ in the table indicates the cup material.
※ The weight value is when NBR（Nitrile rubber）/ without connector selected.

NAPAT/YS-10B

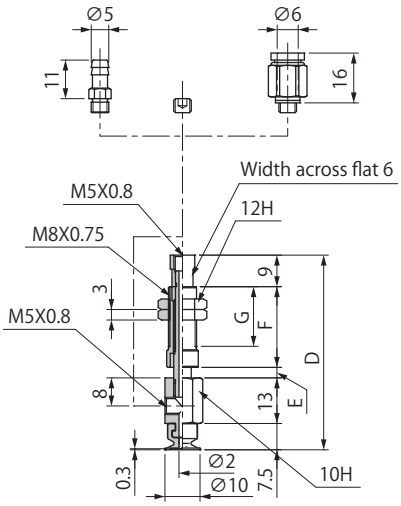

Model number	D	E	F	G	Weight(g)
NAPAT/YS-10B-3- □ (-T/O)	55.5	3	23	17	18
NAPAT/YS-10B-10- □ (-T/O)	62.5	10			18.5
NAPAT/YS-10B-15- □ (-T/O)	75	15	30.5	24.5	21

※□ in the table indicates the cup material.
※ The weight value is when NBR（Nitrile rubber）/ without connector selected.

NAPAT/YS-15A

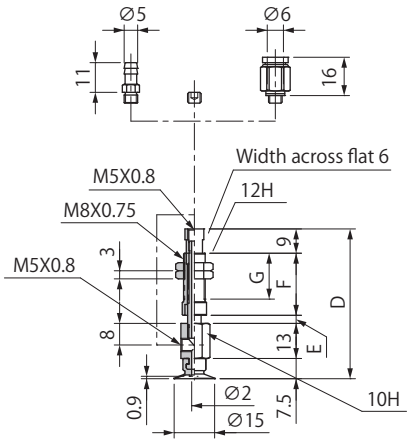

Model number	D	E	F	G	Weight(g)
NAPAT/YS-15A-3- □ (-T/O)	55.5	3	23	17	18
NAPAT/YS-15A-10- □ (-T/O)	62.5	10			18.5
NAPAT/YS-15A-15- □ (-T/O)	75	15	30.5	24.5	21

※□ in the table indicates the cup material.
※ The weight value is when NBR（Nitrile rubber）/ without connector selected.

NAPAT/YS-15B

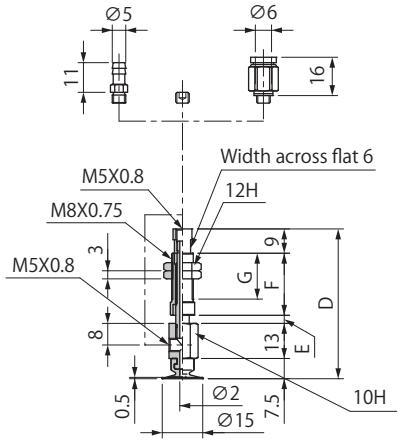

Model number	D	E	F	G	Weight(g)
NAPAT/YS-15B-3- □ (-T/O)	55.5	3	23	17	18
NAPAT/YS-15B-10- □ (-T/O)	62.5	10			18.5
NAPAT/YS-15B-15- □ (-T/O)	75	15	30.5	24.5	21

※□ in the table indicates the cup material.
※ The weight value is when NBR（Nitrile rubber）/ without connector selected.

Common Specifications

Connector Weight(g)

Symbol	Tube O.D ϕ 6
T	1.5
O	4.0

Dimensions

(mm)

NAPAT/YS-20A

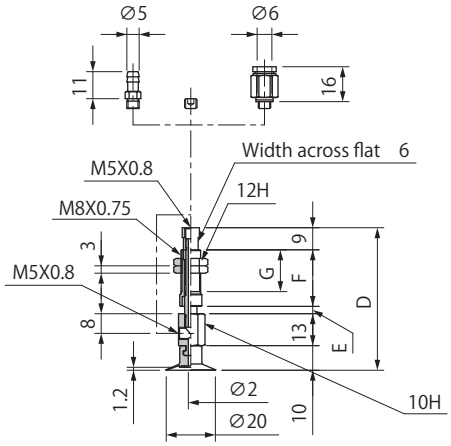

Model number	D	E	F	G	Weight (g)
NAPAT/YS-20A-3-□ (-T/O)	58	3	23	17	18
NAPAT/YS-20A-10-□ (-T/O)	65	10			18.5
NAPAT/YS-20A-15-□ (-T/O)	77.5	15	30.5	24.5	21

※□ in the table indicates the cup material.
※ The weight value is when NBR（Nitrile rubber）/ without connector selected.

NAPAT/YS-20B

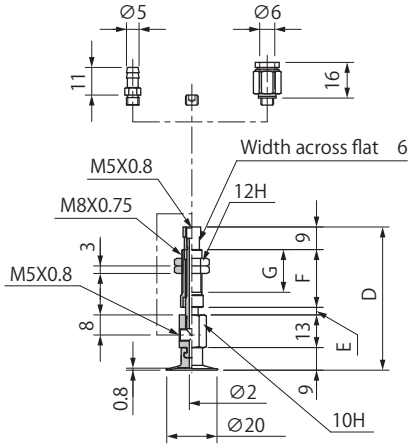

Model number	D	E	F	G	Weight (g)
NAPAT/YS-20B-3-□ (-T/O)	57	3	23	17	18
NAPAT/YS-20B-10-□ (-T/O)	64	10			18.5
NAPAT/YS-20B-15-□ (-T/O)	76.5	15	30.5	24.5	21

※□ in the table indicates the cup material.
※ The weight value is when NBR（Nitrile rubber）/ without connector selected.

NAPAT/YS-25

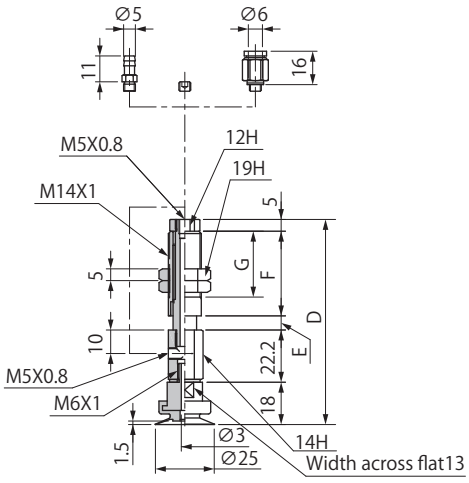

Model number	D	E	F	G	Weight (g)
NAPAT/YS-25-6-□ (-T/O)	87.2	6	36	28	81
NAPAT/YS-25-15-□ (-T/O)	96.2	15			86
NAPAT/YS-25-30-□ (-T/O)	133.2	30	58	50	111

※□ in the table indicates the cup material.
※ The weight value is when NBR（Nitrile rubber）/ without connector selected.

NAPAT/YS-30

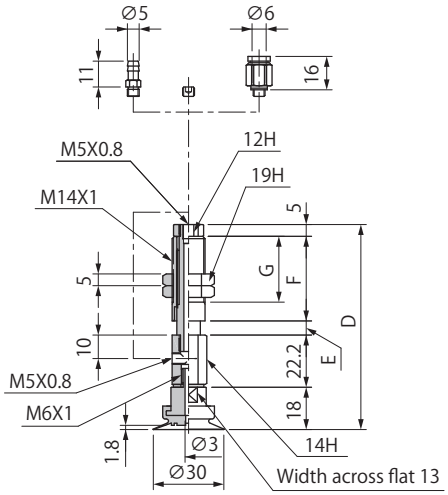

Model number	D	E	F	G	Weight (g)
NAPAT/YS-30-6-□ (-T/O)	87.2	6	36	28	82
NAPAT/YS-30-15-□ (-T/O)	96.2	15			87
NAPAT/YS-30-30-□ (-T/O)	133.2	30	58	50	112

※□ in the table indicates the cup material.
※ The weight value is when NBR（Nitrile rubber）/ without connector selected.

Common Specifications

Connector Weight(g)

Symbol	Tube O.D ϕ 6
T	1.5
O	4.0

NAPATS·YS Cup with Spring Fitting

Dimensions

(mm)

NAPAT/YS-30B

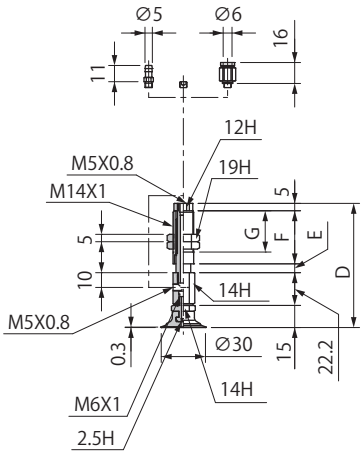

Model number	D	E	F	G	Weight(g)
NAPAT/YS-30B-6- □ (-T/O)	84.2	6	36	28	82
NAPAT/YS-30B-15- □ (-T/O)	93.2	15			87
NAPAT/YS-30B-30- □ (-T/O)	130.2	30	58	50	112

※□ in the table indicates the cup material.
※ The weight value is when NBR（Nitrile rubber）/ without connector selected.

NAPAT/YS-40

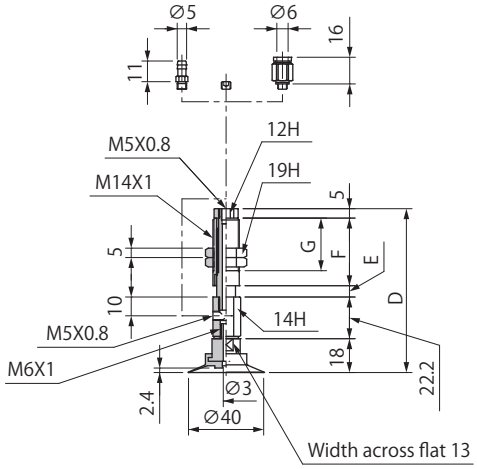

Model number	D	E	F	G	Weight(g)
NAPAT/YS-40-6- □ (-T/O)	87.2	6	36	28	82
NAPAT/YS-40-15- □ (-T/O)	96.2	15			87
NAPAT/YS-40-30- □ (-T/O)	133.2	30	58	50	112

※□ in the table indicates the cup material.
※ The weight value is when NBR（Nitrile rubber）/ without connector selected.

NAPAT/YS-50

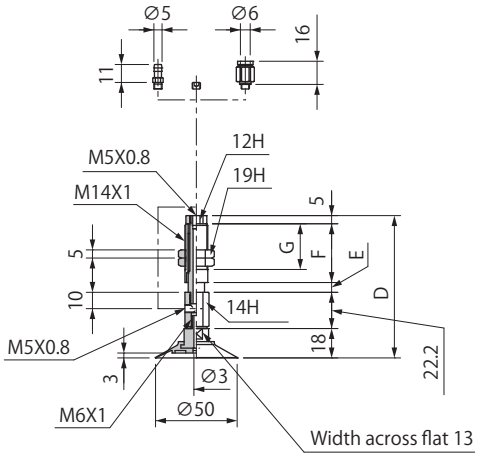

Model number	D	E	F	G	Weight(g)
NAPAT/YS-50-6- □ (-T/O)	87.2	6	36	28	83
NAPAT/YS-50-15- □ (-T/O)	96.2	15			88
NAPAT/YS-50-30- □ (-T/O)	133.2	30	58	50	113

※□ in the table indicates the cup material.
※ The weight value is when NBR（Nitrile rubber）/ without connector selected.

Common Specifications

Connector Weight(g)

Symbol	Tube O.D ϕ 6
T	1.5
O	4.0

02
Suction Cup
PA
PB
PC
PCD
PD
PF
PFO
PH
PJ
CORE
PK2
PK2B
PK2L
PL
PN
PN-B
PP
PQ
PR
PU
PW
RA
SM
TN

NAPATH·YH Cup with Non-rotation Spring Fitting

Consisting of fitting, setting screw, suction cup.

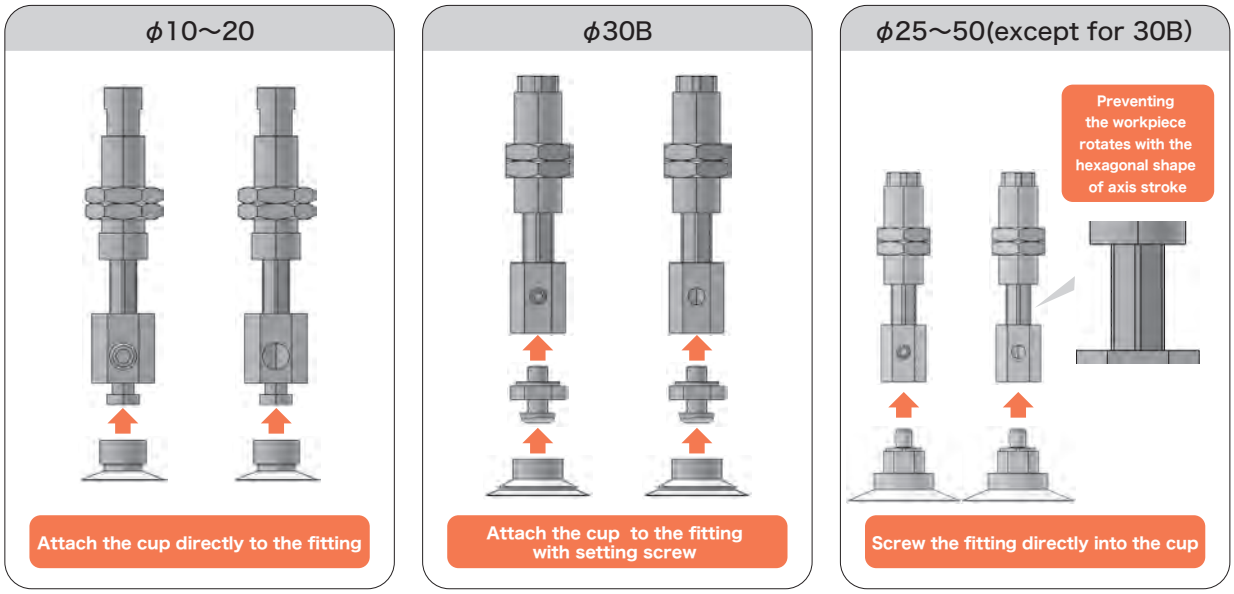

How to Order

NAPA T H – 10A – 3 – N – T

① ② ③ ④

① Vacuum Port

T	Top
Y	Side

② Cup Size - Stroke (mm)

Symbol	Cup size Stroke	Symbol	Cup size Stroke	Symbol	Cup size Stroke
10A-3	ϕ10-3	20A-3	ϕ20-3	30B-6	ϕ30-6
10A-10	ϕ10-10	20A-10	ϕ20-10	30B-15	ϕ30-15
10A-15	ϕ10-15	20A-15	ϕ20-15	30B-30	ϕ30-30
10B-3	ϕ10-3	20B-3	ϕ20-3	40-6	ϕ40-6
10B-10	ϕ10-10	20B-10	ϕ20-10	40-15	ϕ40-15
10B-15	ϕ10-15	20B-15	ϕ20-15	40-30	ϕ40-30
15A-3	ϕ15-3	25-6	ϕ25-6	50-6	ϕ50-6
15A-10	ϕ15-10	25-15	ϕ25-15	50-15	ϕ50-15
15A-15	ϕ15-15	25-30	ϕ25-30	50-30	ϕ50-30
15B-3	ϕ15-3	30-6	ϕ30-6		
15B-10	ϕ15-10	30-15	ϕ30-15		
15B-15	ϕ15-15	30-30	ϕ30-30		

③ Cup Rubber Material

Symbol	Material
N	NBR(Nitrile rubber)
S	Silicone rubber
F	Fluorine rubber
NE	Conductive NBR (Nitrile rubber)
SE	Conductive silicone rubber

※ Please consult with us for other material.

④ Connector

Blank	N/A
T	Barb
O	Push-in

Spring Specifications

Cup Size	Unit	ϕ10~20			ϕ25~50		
Stroke	mm	3	10	15	6	15	30
Spring load at 0 stroke	N	0.61		0.64	2.45		2.9
Spring load at full stroke	N	0.77	1.17		3.43	4.9	5.88

Combination Table

Model number	Cup	Setting screw	Fitting	Piping specifications		
				Without connector・Blank	Barb connector・T	Push-in connector・O
NAPA○H-10A-3-□ (-T/O)	PAG-10A-□	Attach the cup directly to the fitting	NAPF○H-5A-3-K (-T/O)	M5X0.8 (Female)	ϕ 6 X 4	
NAPA○H-10A-10-□ (-T/O)			NAPF○H-5A-10-K (-T/O)			
NAPA○H-10A-15-□ (-T/O)			NAPF○H-5A-15-K (-T/O)			
NAPA○H-10B-3-□ (-T/O)	PAG-10B-□		NAPF○H-5A-3-K (-T/O)			
NAPA○H-10B-10-□ (-T/O)			NAPF○H-5A-10-K (-T/O)			
NAPA○H-10B-15-□ (-T/O)			NAPF○H-5A-15-K (-T/O)			
NAPA○H-15A-3-□ (-T/O)	PAG-15A-□		NAPF○H-5A-3-K (-T/O)			
NAPA○H-15A-10-□ (-T/O)			NAPF○H-5A-10-K (-T/O)			
NAPA○H-15A-15-□ (-T/O)			NAPF○H-5A-15-K (-T/O)			
NAPA○H-15B-3-□ (-T/O)	PAG-15B-□		NAPF○H-5A-3-K (-T/O)			
NAPA○H-15B-10-□ (-T/O)			NAPF○H-5A-10-K (-T/O)			
NAPA○H-15B-15-□ (-T/O)			NAPF○H-5A-15-K (-T/O)			
NAPA○H-20A-3-□ (-T/O)	PAG-20A-□		NAPF○H-5A-3-K (-T/O)			
NAPA○H-20A-10-□ (-T/O)			NAPF○H-5A-10-K (-T/O)			
NAPA○H-20A-15-□ (-T/O)			NAPF○H-5A-15-K (-T/O)			
NAPA○H-20B-3-□ (-T/O)	PAG-20B-□		NAPF○H-5A-3-K (-T/O)			
NAPA○H-20B-10-□ (-T/O)			NAPF○H-5A-10-K (-T/O)			
NAPA○H-20B-15-□ (-T/O)			NAPF○H-5A-15-K (-T/O)			
NAPA○H-25-6-□ (-T/O)	PAG-25-□	Screw the fitting directly into the male screw in the cup	NAPA○H-25-6-K (-T/O)			
NAPA○H-25-15-□ (-T/O)			NAPA○H-25-15-K (-T/O)			
NAPA○H-25-30-□ (-T/O)			NAPA○H-25-30-K (-T/O)			
NAPA○H-30-6-□ (-T/O)	PAG-30-□		NAPA○H-25-6-K (-T/O)			
NAPA○H-30-15-□ (-T/O)			NAPA○H-25-15-K (-T/O)			
NAPA○H-30-30-□ (-T/O)			NAPA○H-25-30-K (-T/O)			
NAPA○H-30B-6-□ (-T/O)	PAG-30B-□	TN-PA-30-M6	NAPA○H-25-6-K (-T/O)			
NAPA○H-30B-15-□ (-T/O)			NAPA○H-25-15-K (-T/O)			
NAPA○H-30B-30-□ (-T/O)			NAPA○H-25-30-K (-T/O)			
NAPA○H-40-6-□ (-T/O)	PAG-40-□	Screw the fitting directly into the male screw in the cup	NAPA○H-25-6-K (-T/O)			
NAPA○H-40-15-□ (-T/O)			NAPA○H-25-15-K (-T/O)			
NAPA○H-40-30-□ (-T/O)			NAPA○H-25-30-K (-T/O)			
NAPA○H-50-6-□ (-T/O)	PAG-50-□		NAPA○H-25-6-K (-T/O)			
NAPA○H-50-15-□ (-T/O)			NAPA○H-25-15-K (-T/O)			
NAPA○H-50-30-□ (-T/O)			NAPA○H-25-30-K (-T/O)			

※□ in the table indicates the cup material.
※○ in the table indicates the vacuum port (T or Y).

NAPATH·YH Cup with Non-rotation Spring Fitting

Dimensions

(mm)

NAPAT/YH-10A

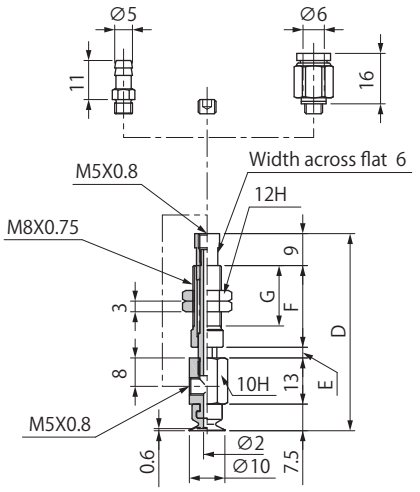

Model number	D	E	F	G	Weight (g)
NAPAT/YH-10A-3-□ (-T/O)	55.5	3	23	17	18.5
NAPAT/YH-10A-10-□ (-T/O)	62.5	10			19
NAPAT/YH-10A-15-□ (-T/O)	75	15	30.5	24.5	22

※□ in the table indicates the cup material.
※ The weight value is when NBR（Nitrile rubber）/ without connector selected.

NAPAT/YH-10B

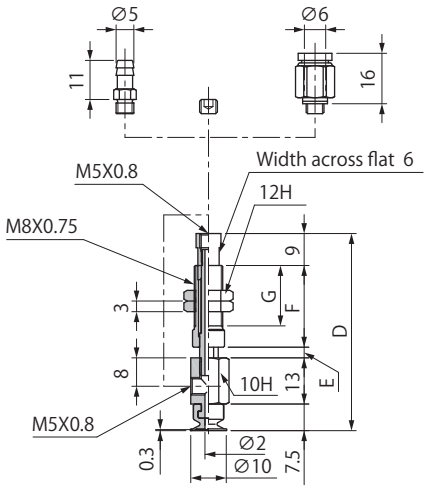

Model number	D	E	F	G	Weight (g)
NAPAT/YH-10B-3-□ (-T/O)	55.5	3	23	17	18.5
NAPAT/YH-10B-10-□ (-T/O)	62.5	10			19
NAPAT/YH-10B-15-□ (-T/O)	75	15	30.5	24.5	22

※□ in the table indicates the cup material.
※ The weight value is when NBR（Nitrile rubber）/ without connector selected.

NAPAT/YH-15A

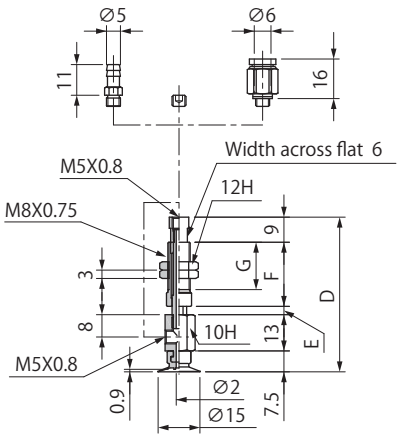

Model number	D	E	F	G	Weight (g)
NAPAT/YH-15A-3-□ (-T/O)	55.5	3	23	17	18.5
NAPAT/YH-15A-10-□ (-T/O)	62.5	10			19
NAPAT/YH-15A-15-□ (-T/O)	75	15	30.5	24.5	22

※□ in the table indicates the cup material.
※ The weight value is when NBR（Nitrile rubber）/ without connector selected.

NAPAT/YH-15B

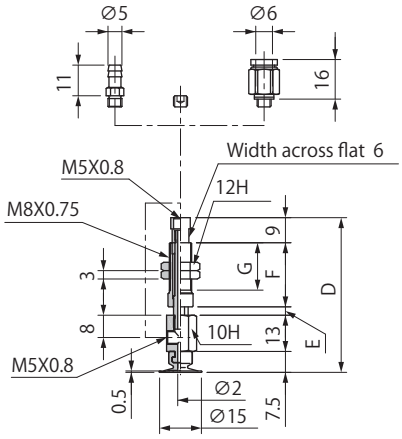

Model number	D	E	F	G	Weight (g)
NAPAT/YH-15B-3-□ (-T/O)	55.5	3	23	17	18.5
NAPAT/YH-15B-10-□ (-T/O)	62.5	10			19
NAPAT/YH-15B-15-□ (-T/O)	75	15	30.5	24.5	22

※□ in the table indicates the cup material.
※ The weight value is when NBR（Nitrile rubber）/ without connector selected.

Common Specifications

Connector Weight(g)

Symbol	Tube O.D ϕ 6
T	1.5
O	4.0

Dimensions

(mm)

NAPAT/YH-20A

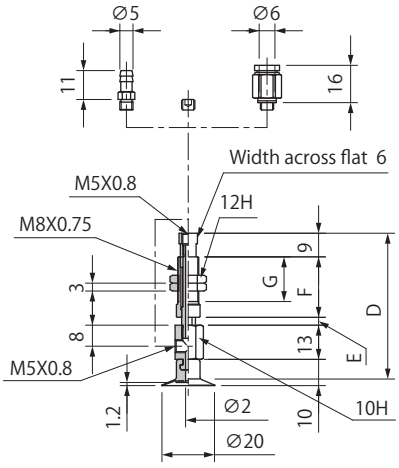

Model number	D	E	F	G	Weight (g)
NAPAT/YH-20A-3-□ (-T/O)	58	3	23	17	18.5
NAPAT/YH-20A-10-□ (-T/O)	65	10			19
NAPAT/YH-20A-15-□ (-T/O)	77.5	15	30.5	24.5	22

※□ in the table indicates the cup material.
※ The weight value is when NBR（Nitrile rubber）/ without connector selected.

NAPAT/YH-20B

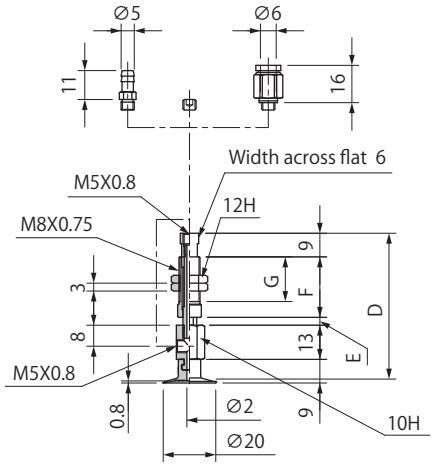

Model number	D	E	F	G	Weight (g)
NAPAT/YH-20B-3-□ (-T/O)	57	3	23	17	18.5
NAPAT/YH-20B-10-□ (-T/O)	64	10			19
NAPAT/YH-20B-15-□ (-T/O)	76.5	15	30.5	24.5	22

※□ in the table indicates the cup material.
※ The weight value is when NBR（Nitrile rubber）/ without connector selected.

NAPAT/YH-25

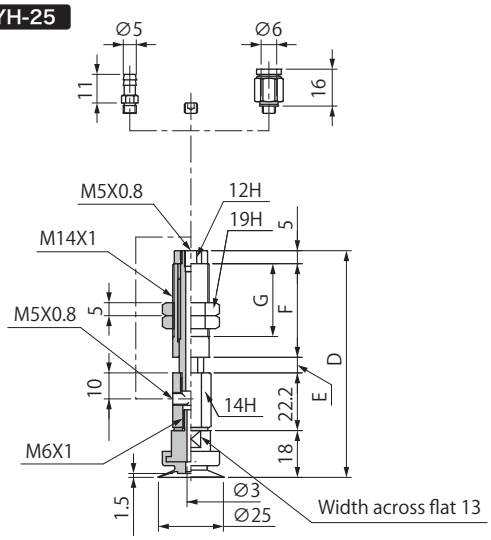

Model number	D	E	F	G	Weight (g)
NAPAT/YH-25-6-□ (-T/O)	87.2	6	36	28	79
NAPAT/YH-25-15-□ (-T/O)	96.2	15			84
NAPAT/YH-25-30-□ (-T/O)	133.2	30	58	50	108

※□ in the table indicates the cup material.
※ The weight value is when NBR（Nitrile rubber）/ without connector selected.

NAPAT/YH-30

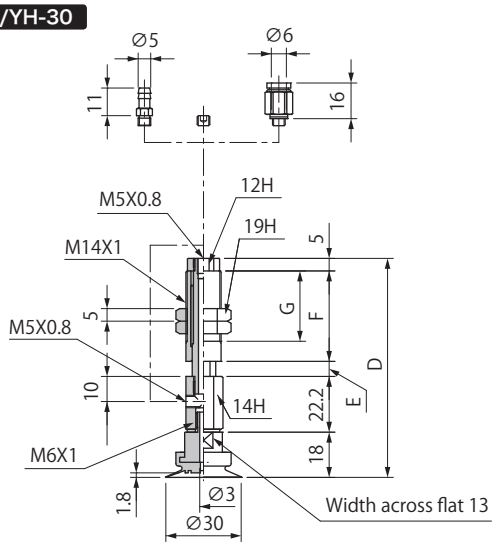

Model number	D	E	F	G	Weight (g)
NAPAT/YH-30-6-□ (-T/O)	87.2	6	36	28	80
NAPAT/YH-30-15-□ (-T/O)	96.2	15			85
NAPAT/YH-30-30-□ (-T/O)	133.2	30	58	50	109

※□ in the table indicates the cup material.
※ The weight value is when NBR（Nitrile rubber）/ without connector selected.

Common Specifications

Connector Weight(g)

Symbol	Tube O.D ϕ 6
T	1.5
O	4.0

NAPATH·YH Cup with Non-rotation Spring Fitting

Dimensions

(mm)

NAPAT/YH-30B

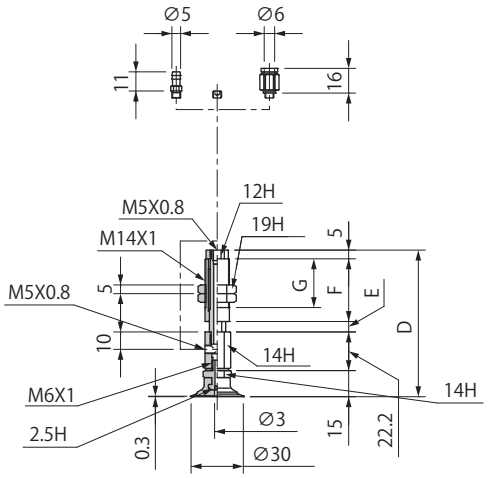

Model number	D	E	F	G	Weight (g)
NAPAT/YH-30B-6-□ (-T/O)	84.2	6	36	28	80
NAPAT/YH-30B-15-□ (-T/O)	93.2	15			85
NAPAT/YH-30B-30-□ (-T/O)	130.2	30	58	50	109

※□ in the table indicates the cup material.
※ The weight value is when NBR（Nitrile rubber）/ without connector selected.

NAPAT/YH-40

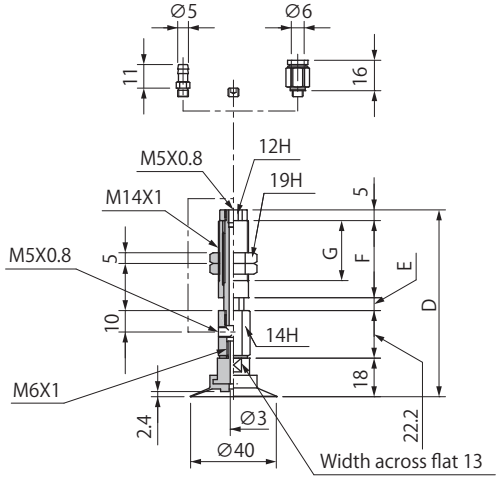

Model number	D	E	F	G	Weight (g)
NAPAT/YH-40-6-□ (-T/O)	87.2	6	36	28	80
NAPAT/YH-40-15-□ (-T/O)	96.2	15			86
NAPAT/YH-40-30-□ (-T/O)	133.2	30	58	50	110

※□ in the table indicates the cup material.
※ The weight value is when NBR（Nitrile rubber）/ without connector selected.

NAPAT/YH-50

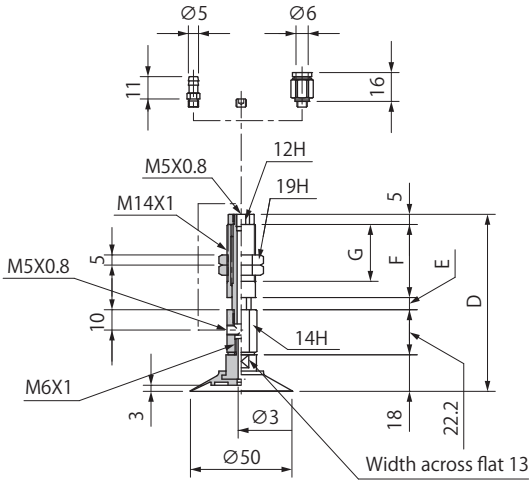

Model number	D	E	F	G	Weight (g)
NAPAT/YH-50-6-□ (-T/O)	87.2	6	36	28	81
NAPAT/YH-50-15-□ (-T/O)	96.2	15			87
NAPAT/YH-50-30-□ (-T/O)	133.2	30	58	50	111

※□ in the table indicates the cup material.
※ The weight value is when NBR（Nitrile rubber）/ without connector selected.

Common Specifications

Connector Weight(g)

Symbol	Tube O.D ϕ 6
T	1.5
O	4.0

02
Suction Cup
PA
PB
PC
PCD
PD
PF
PFO
PH
PJ
CORE
PK2
PK2B
PK2L
PL
PN
PN-B
PP
PQ
PR
PU
PW
RA
SM
TN

PB Series

2 Bellows Cup

RoHS

2 bellows type with thick lip.

For workpieces with the oblique surface, and when there is no space for attaching spring type fitting!

Cardboard

Metal plate

Wide range of cup sizes.

ϕ10 | ϕ15 | ϕ20 | ϕ30 | ϕ40 | ϕ50 | ϕ75 | ϕ110 | ϕ150

Various fittings for many kinds of applications.

Fixed fitting

Spring fitting

Compact type fitting

Suction Cup

PBG		Cup size (mm) ϕ10～150		P.203

Fitting

Type		Applicable cup size (mm)	Stroke (mm)	Vacuum port	Piping・Connector	Page
Cup with fixed fitting PBTK		ϕ 10～50	N/A	Top	Barb	P.207
		ϕ 75			Female screw	
Cup with fixed fitting PBYK		ϕ 10～50	N/A	Side	Barb	P.207
		ϕ 75～150			Female screw	
Cup with compact spring fitting PSS		ϕ 10,15	3,5	Top	Male screw	P.213
Cup with spring fitting NAPBTS		ϕ 10, 15	3, 10, 15	Top	Female screw Push-in Barb	P.215
		ϕ 20～50	6, 15, 30			
		ϕ 75	10, 30, 50		Female screw	
		ϕ 110～150	20, 50			
Cup with spring fitting NAPBYS		ϕ 10, 15	3, 10, 15	Side	Female screw Push-in Barb	P.215
		ϕ 20～50	6, 15, 30			
		ϕ 75	10, 30, 50		Female screw	
		ϕ 110～150	20, 50			
Cup with non-rotation spring fitting NAPBTH		ϕ 10, 15	3, 10, 15	Top	Female screw Push-in Barb	P.221
		ϕ 20～50	6, 15, 30			
Cup with non-rotation spring fitting NAPBYH		ϕ 10, 15	3, 10, 15	Side	Female screw Push-in Barb	P.221
		ϕ 20～50	6, 15, 30			
Setting screw		ϕ 10～50	—	—	—	P.503

Suction Cup Selection Guide ••→ P.163

PBG 2 Bellows Cup

How to Order

PBG — 10A — N
① ②

① Cup Size (mm)

Symbol	Cup size
10A	ϕ10
15A	ϕ15
20	ϕ20
30	ϕ30
40	ϕ40
50	ϕ50
75	ϕ75
110	ϕ110
150	ϕ150

② Cup Rubber Material

Symbol	Material
N	NBR(Nitrile rubber)
S	Silicone rubber
U	Urethane rubber
F	Fluorine rubber
NE	Conductive NBR (Nitrile rubber)
SE	Conductive silicone rubber

※ Please consult with us for other material.

Cup Rubber Material Standard Specifications

Symbol	Material	Hardness (A/s)	Ambient temperature (℃)	Color	Volume resistivity Note1.2
N	NBR(Nitrile rubber)	55	-26～120	Black	-
S	Silicone rubber	55	-60～250	Translucent white	-
U	Urethane rubber	55	-20～75	Blue	-
F	Fluorine rubber	70	-10～230	Black with white dot	-
NE	Conductive NBR (Nitrile rubber)	70	-26～120	Black with blue dot	10^2～10^3 Ω・cm
SE	Conductive silicone rubber	55	-60～250	Black with red dot	10^2～10^4 Ω・cm

Note1) Volume resistivity shows conductivity, resistance value is per cm^3.
Note2) It is the measured value of in our designated test piece.

Applicable Rubber Material Table

Material	Color	Symbol	Round type								
			10A	15A	20	30	40	50	75	110	150
NBR(Nitrile rubber)	Black	N	●	●	●	●	●	●	●	●	●
Silicone rubber	Translucent white	S	●	●	●	●	●	●	●	●	●
Urethane rubber	Blue	U	●	●	●	●	●	●	○	○	○
Fluorine rubber	Black with white dot	F	●	●	●	●	●	●	○	○	○
Conductive NBR (Nitrile rubber)	Black with blue dot	NE	●	●	●	●	●	●	×	×	×
Conductive silicone rubber	Black with red dot	SE	●	●	●	●	●	●	×	×	×

●: In stock ○Made to order ×: None
※Please consult with us for other material.

Dimensions

(mm)

PBG-10A

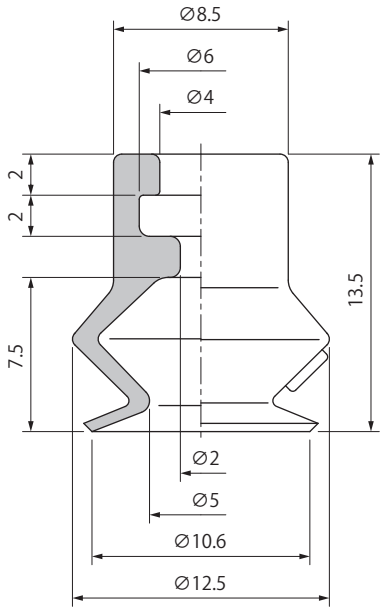

PBG-15A

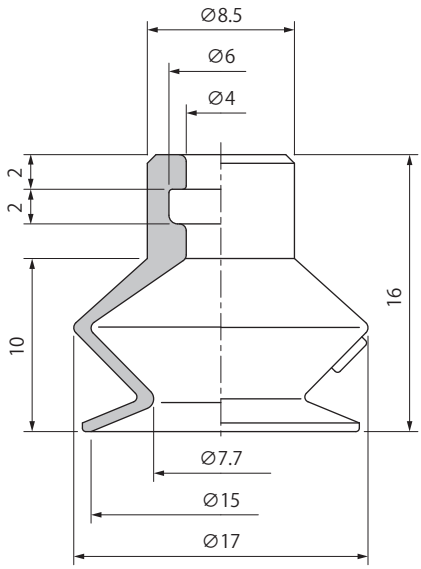

PBG-20

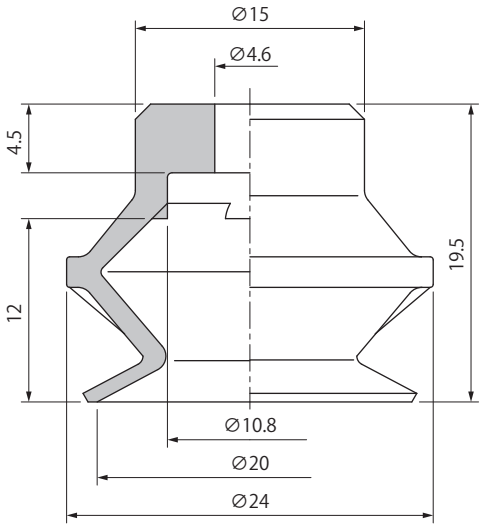

PBG-30

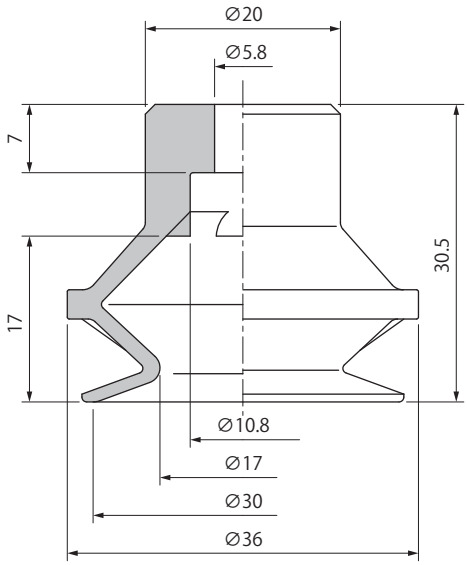

Weight

(g)

Model ＼ Material	N	S	U	F	NE	SE	Applicable setting screw (Screw specifications)
PBG-10A	0.7	0.7	0.7	1.0	0.7	0.7	TN-PS-10-M5 (Male M5X0.8) TN-PS-10-M5F (Female M5X0.8)
PBG-15A	0.9	0.8	0.9	1.3	0.9	0.9	
PBG-20	2.6	2.6	2.8	4.2	2.8	2.6	TN-PF-20-M5 (Male M5X0.8)
PBG-30	8.7	8.7	9.2	14.0	9.2	8.7	TN-PF-25-M6 (Male M6X1.0)

※Please refer to P.503 for setting screw detailed specifications.

Symbol	Material
N	NBR(Nitrile rubber)
S	Silicone rubber
U	Urethane rubber
F	Fluorine rubber
NE	Conductive NBR (Nitrile rubber)
SE	Conductive silicone rubber

PBG 2 Bellows Cup

Dimensions

(mm)

PBG-40

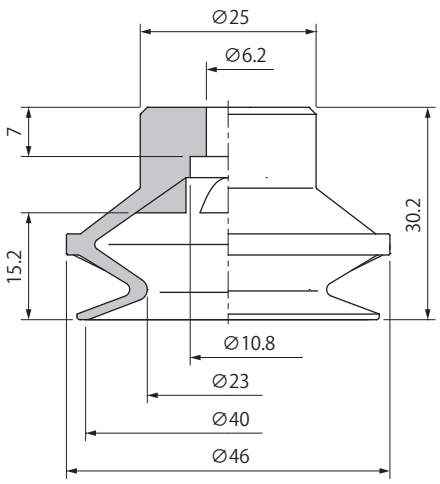

PBG-50

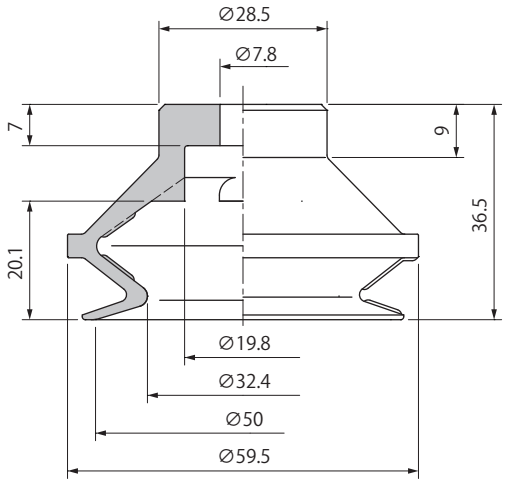

PBG-75

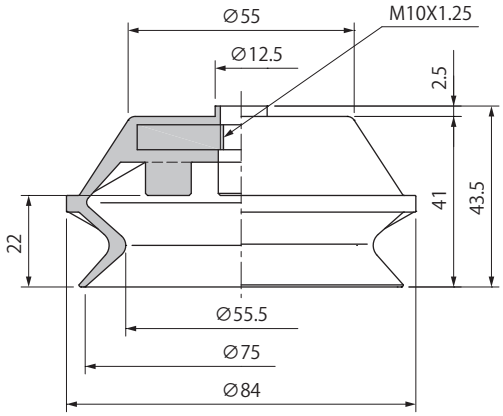

PBG-110

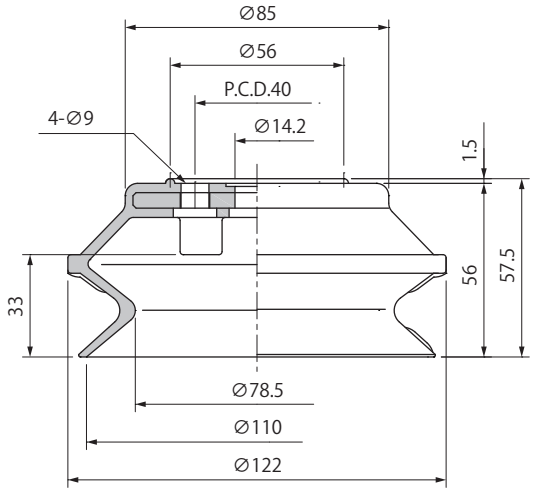

Weight

(g)

Model \ Material	N	S	U	F	NE	SE	Applicable setting screw (Screw specifications)
PBG-40	14.0	14.0	14.7	22.4	14.7	14.0	TN-PF-25-M6 (Male M6X1.0)
PBG-50	25.0	25.0	26.3	40.0	26.3	25.0	TN-PF-50-M6 (Male M6X1.0) TN-PF-50-M8 (Male M8X1.25)
PBG-75	85.0	85.0	87.8	118.0	87.8	85.0	-
PBG-110	273.0	273.0	279.2	346.8	279.2	273.0	

※Please refer to P.503 for setting screw detailed specifications.

Symbol	Material
N	NBR(Nitrile rubber)
S	Silicone rubber
U	Urethane rubber
F	Fluorine rubber
NE	Conductive NBR (Nitrile rubber)
SE	Conductive silicone rubber

Dimensions

(mm)

PBG-150

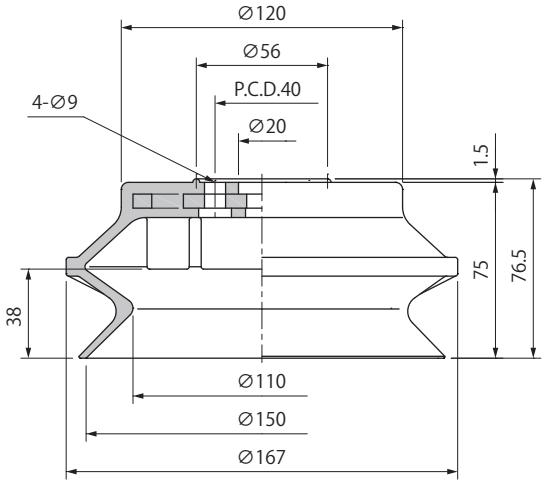

Weight

(g)

Model ＼ Material	N	S	U	F	NE	SE
PBG-150	797.0	797.0	818.7	1057.4	818.7	797.0

Symbol	Material
N	NBR(Nitrile rubber)
S	Silicone rubber
U	Urethane rubber
F	Fluorine rubber
NE	Conductive NBR (Nitrile rubber)
SE	Conductive silicone rubber

PBTK•YK Cup with Fixed Fitting

Consisting of fitting, setting screw, suction cup.

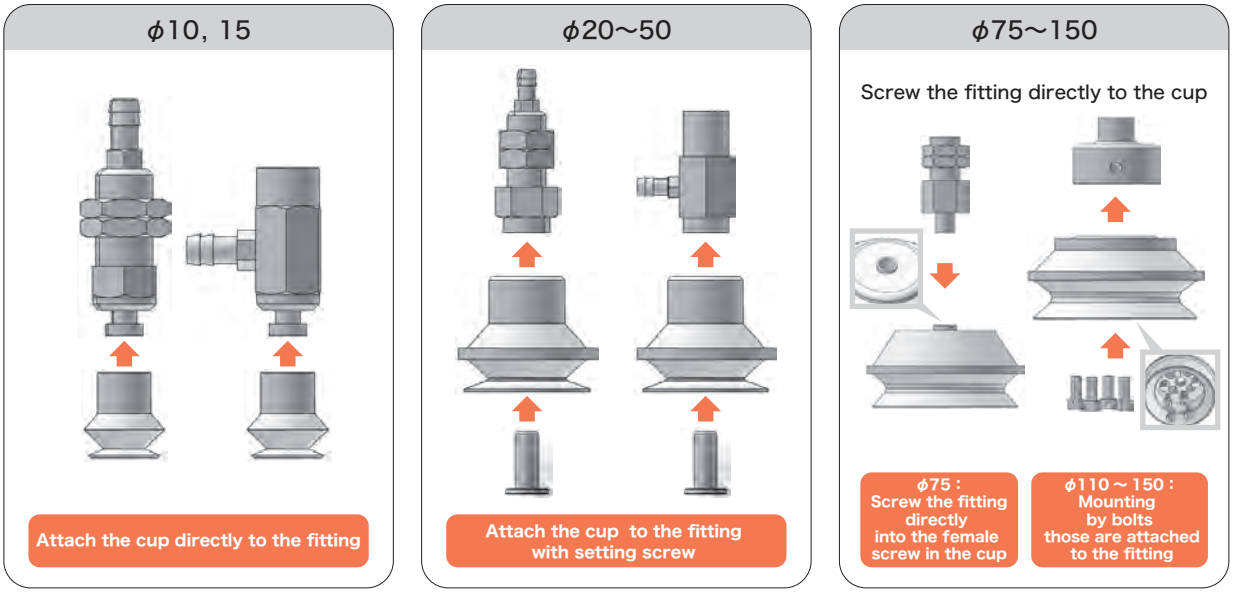

How to Order

PB T K – 10A – N

① ② ③

① Vacuum Port

T	Top Note1
Y	Side

Note1）ϕ10～ϕ75 only.

① Cup Size (mm)

Symbol	Cup size
10A	ϕ10
15A	ϕ15
20	ϕ20
30	ϕ30
40	ϕ40
50	ϕ50
75	ϕ75
110	ϕ110 Note1
150	ϕ150 Note1

Note1）Side port only.

② Cup Rubber Material

Symbol	Material
N	NBR(Nitrile rubber)
S	Silicone rubber
U	Urethane rubber
F	Fluorine rubber
NE	Conductive NBR (Nitrile rubber)
SE	Conductive silicone rubber

※ Please consult with us for other material.

Combination Table

Top Port

Model number	Cup	Setting screw	Fitting	Piping specifications	
PBTK-10A- □	PBG-10A- □	Attach the cup directly to the fitting	PFTK-10A-K	Barb	ϕ6X4
PBTK-15A- □	PBG-15A- □				
PBTK-20- □	PBG-20- □	TN-PF-20-M5	PFTK-15-K		
PBTK-30- □	PBG-30- □	TN-PF-25-M6	PFTK-25-K		
PBTK-40- □	PBG-40- □				
PBTK-50- □	PBG-50- □	TN-PF-50-M8	PFTK-50-K		
PBTK-75- □	PBG-75- □	Screw the fitting directly into the female screw in the cup	PFTK-60-K	Rc1/8 (Female)	

※□ in the table indicates the cup material.

Side Port

Model number	Cup	Setting screw	Fitting	Piping specifications	
PBYK-10A- □	PBG-10A- □	Attach the cup directly to the fitting	PFYK-5A-K	Barb	ϕ6X4
PBYK-15A- □	PBG-15A- □				
PBYK-20- □	PBG-20- □	TN-PF-20-M5	PFYK-15-K		
PBYK-30- □	PBG-30- □	TN-PF-25-M6	PFYK-25-K		
PBYK-40- □	PBG-40- □				
PBYK-50- □	PBG-50- □	TN-PF-50-M8	PFYK-50-K		
PBYK-75- □	PBG-75- □	Screw the fitting directly into the female screw in the cup	PFYK-60-K	Rc1/8 (Female)	
PBYK-110- □	PBG-110- □	Mounting by bolts (4 pieces) those are attached to the fitting	PFYK-120-K		
PBYK-150- □	PBG-150- □				

※□ in the table indicates the cup material.

PBTK•YK Cup with Fixed Fitting

Dimensions

(mm)

Top Port PBTK-10A/15A

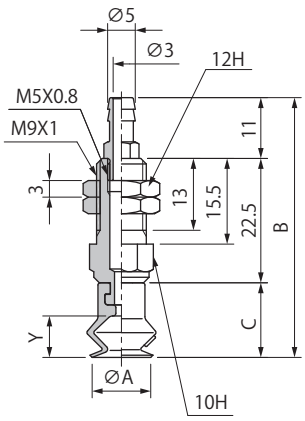

Model number	A	B	C	Y	Weight (g)
PBTK-10A- □	10	47	13.5	7.5	15
PBTK-15A- □	15	49.5	16	10	

※□ in the table indicates the cup material.
※ The weight value is when NBR（Nitrile rubber）selected.

Top Port PBTK-20

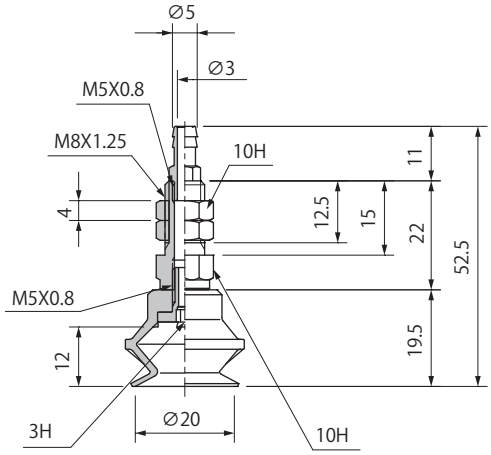

Model number	Weight (g)
PBTK-20- □	21

※□ in the table indicates the cup material.
※ The weight value is when NBR（Nitrile rubber）selected.

Top Port PBTK-30/40/50

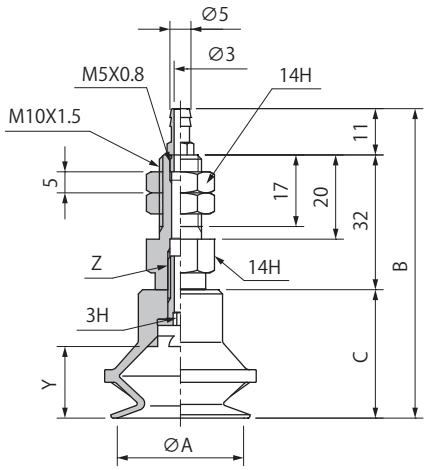

Model number	A	B	C	Y	Z	Weight (g)
PBTK-30- □	30	73.5	30.5	17	M6X1.0	45
PBTK-40- □	40	73.2	30.2	15.2		48
PBTK-50- □	50	79.5	36.5	20.1	M8X1.25	62

※□ in the table indicates the cup material.
※ The weight value is when NBR（Nitrile rubber）selected.

Top Port PBTK-75

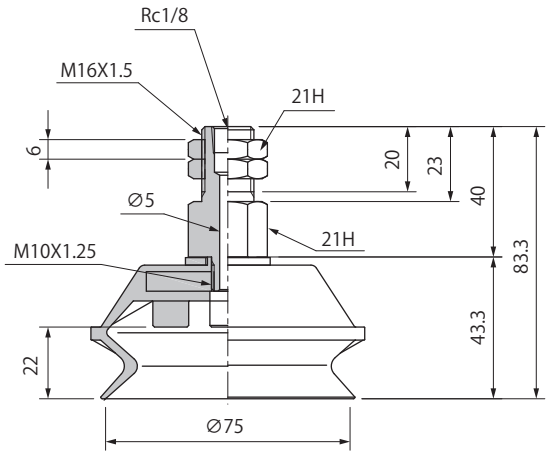

Model number	Weight (g)
PBTK-75- □	186

※□ in the table indicates the cup material.
※ The weight value is when NBR（Nitrile rubber）selected.

Dimensions

(mm)

Side Port PBYK-10A/15A

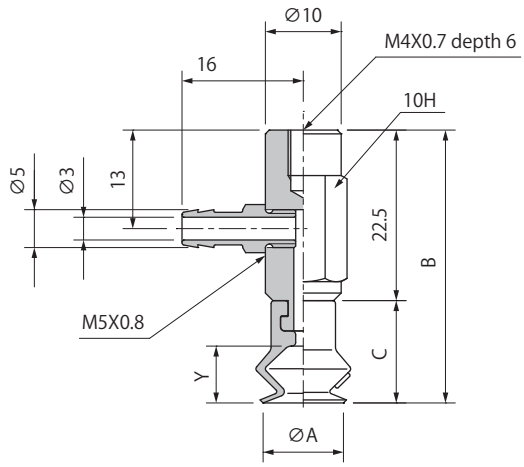

Model number	A	B	C	Y	Weight (g)
PBYK-10A- □	10	36	13.5	7.5	16
PBYK-15A- □	15	38.5	16	10	

※□ in the table indicates the cup material.
※ The weight value is when NBR（Nitrile rubber）selected.

Side Port PBYK-20

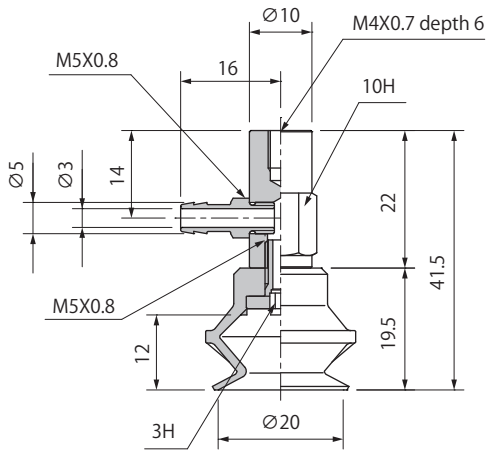

Model number	Weight (g)
PBYK-20- □	21

※□ in the table indicates the cup material.
※ The weight value is when NBR（Nitrile rubber）selected.

Side Port PBYK-30/40/50

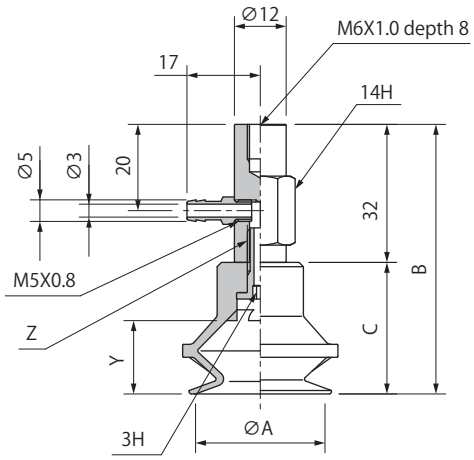

Model number	A	B	C	Y	Z	Weight (g)
PBYK-30- □	30	62.5	30.5	17	M6X1.0	45
PBYK-40- □	40	62.2	30.2	15.2		58
PBYK-50- □	50	68.5	36.5	20.1	M8X1.25	67

※□ in the table indicates the cup material.
※ The weight value is when NBR（Nitrile rubber）selected.

Side Port PBYK-75

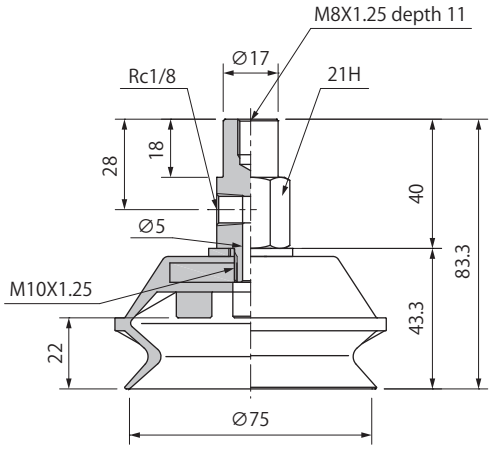

Model number	Weight (g))
PBYK-75- □	176

※□ in the table indicates the cup material.
※ The weight value is when NBR（Nitrile rubber）selected.

PBTK•YK Cup with Fixed Fitting

Dimensions

(mm)

Side Port PBYK-110/150

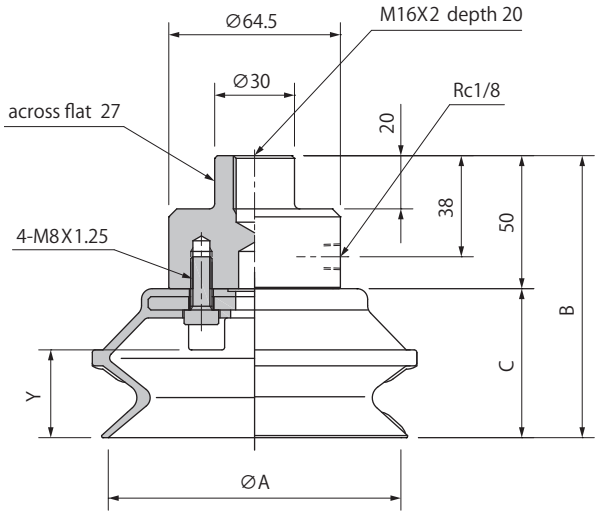

Model number	A	B	C	Y	Weight (g)
PBYK-110-□	110	106	56	33	670
PBYK-150-□	150	125	75	38	1180

※□ in the table indicates the cup material.
※ The weight value is when NBR (Nitrile rubber) selected.

02
Suction Cup
PA
PB
PC
PCD
PD
PF
PFO
PH
PJ
CORE
PK2
PK2B
PK2L
PL
PN
PN-B
PP
PQ
PR
PU
PW
RA
SM
TN

PSS Cup with Compact Spring Fitting

Simple construction of the cup and the fitting.

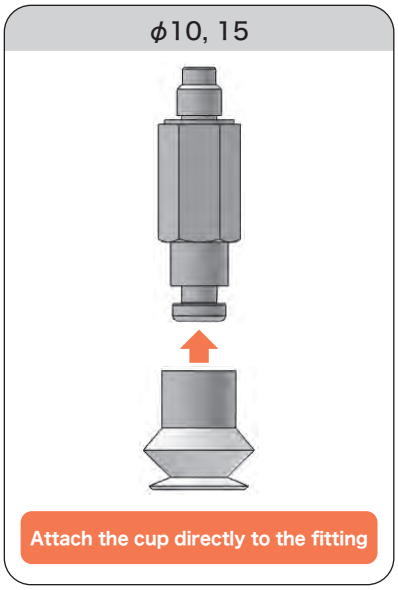

How to Order

PSS – L3 – PBG – 10A – N

① ② ③

① Stroke (mm)

Symbol	Length
L3	3
L5	5

② Cup Size (mm)

Symbol	Cup size
10A	ϕ10
15A	ϕ15

③ Cup Rubber Material

Symbol	Material
N	NBR(Nitrile rubber)
S	Silicone rubber
U	Urethane rubber
F	Fluorine rubber
NE	Conductive NBR (Nitrile rubber)
SE	Conductive silicone rubber

※ Please consult with us for other material.

Combination Table

Model number	Cup	Fitting	Piping specifications
PSS-L3-PBG-10A-□	PBG-10A-□	PSS-L3	M5X0.8 (Male)
PSS-L3-PBG-15A-□	PBG-15A-□		
PSS-L5-PBG-10A-□	PBG-10A-□	PSS-L5	
PSS-L5-PBG-15A-□	PBG-15A-□		

※□ in the table indicates the cup material.

Spring Specifications

Cup size	Unit	ϕ10, ϕ15	
Stroke	mm	3	5
Spring load at 0 stroke	N	1.5	1.62
Spring load at full stroke	N	2.3	3.2
Tightening torque	N・m	0.58~0.68	

※Due to structural reason, 「lift-up」 may occur in case vacuum pressure is more than -65kPa.
The weight of non 「lift-up」 in horizontal lifting is about over 200g.
Screw must be tightened in recommended tightening torque, otherwise malfunction would occur.

Dimensions

(mm)

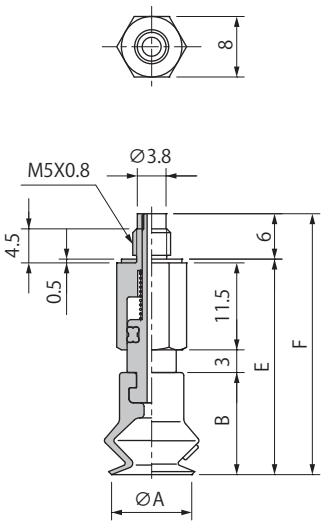

Model number	A	B	E	F	Weight (g)
PSS-L3-PBG-10A-□	10.6	13.5	28.5	34.5	10
PSS-L3-PBG-15A-□	15	16	31	37	

※□ in the table indicates the cup material.
※ The weight value is when NBR（Nitrile rubber）selected.

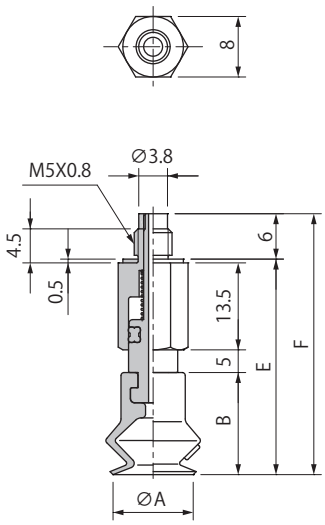

Model number	A	B	E	F	Weight (g)
PSS-L5-PBG-10A-□	10.6	13.5	32.5	38.5	11
PSS-L5-PBG-15A-□	15	16	35	41	

※□ in the table indicates the cup material.
※ The weight value is when NBR（Nitrile rubber）selected.

NAPBTS·YS Cup with Spring Fitting

Consisting of fitting, setting screw, suction cup.

ϕ10, 15

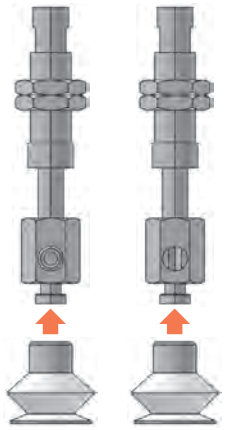

Attach the cup directly to the fitting

ϕ20~50

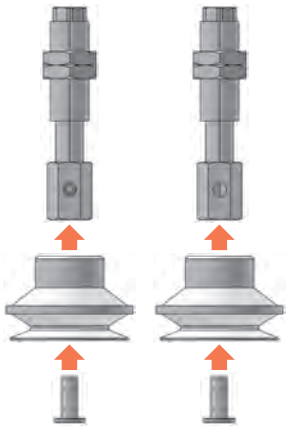

Attach the cup to the fitting with setting screw

ϕ75~150

Screw the fitting directly to the cup

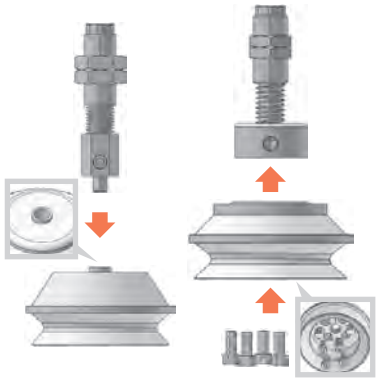

ϕ75 : Screw the fitting directly into the female screw in the cup

ϕ110 ~ 150 : Mounting by bolts those are attached to the fitting

How to Order

NAPB T S – 10A – 3 – N – T

① ② ③ ④

① Vacuum Port

T	Top
Y	Side

② Cup Size - Stroke (mm)

Symbol	Cup size Stroke	Symbol	Cup size Stroke	Symbol	Cup size Stroke
10A-3	ϕ10-3	30-6	ϕ30-6	75-10	ϕ75-10
10A-10	ϕ10-10	30-15	ϕ30-15	75-30	ϕ75-30
10A-15	ϕ10-15	30-30	ϕ30-30	75-50	ϕ75-50
15A-3	ϕ15-3	40-6	ϕ40-6	110-20	ϕ110-20
15A-10	ϕ15-10	40-15	ϕ40-15	110-50	ϕ110-50
15A-15	ϕ15-15	40-30	ϕ40-30	150-20	ϕ150-20
20-6	ϕ20-6	50-6	ϕ50-6	150-50	ϕ150-50
20-15	ϕ20-15	50-15	ϕ50-15		
20-30	ϕ20-30	50-30	ϕ50-30		

③ Cup Rubber Material

Symbol	Material
N	NBR(Nitrile rubber)
S	Silicone rubber
U	Urethane rubber
F	Fluorine rubber
NE	Conductive NBR (Nitrile rubber)
SE	Conductive silicone rubber

※ Please consult with us for other material.

④ Connector

Blank	N/A
T	Barb
O	Push-in

※ϕ 75 or more can not be selected "T" and "O"

Spring Specifications

Cup size	Unit	ϕ10, 15			ϕ20～ϕ50			ϕ75			ϕ110, ϕ150	
Stroke	mm	3	10	15	6	15	30	10	30	50	20	50
Spring load at 0 stroke	N	0.61		0.64	2.45		2.9	8.82	6.76	8.33	15.6	14.7
Spring load at full stroke	N	0.77	1.17		3.43	4.9	5.88	11.8	15.6	19.6	29.4	

Combination Table

Model number	Cup	Setting screw	Fitting	Piping specifications		
				Without connector・Blank	Barb connector・T	Push-in connector・O
NAPB○S-10A-3-□ (-T/O)	PBG-10A-□	Attach the cup directly to the fitting	NAPF○S-10A-3-K (-T/O)	M5X0.8 (Female)	ϕ6 X 4	
NAPB○S-10A-10-□ (-T/O)			NAPF○S-10A-10-K (-T/O)			
NAPB○S-10A-15-□ (-T/O)			NAPF○S-10A-15-K (-T/O)			
NAPB○S-15A-3-□ (-T/O)	PBG-15A-□		NAPF○S-10A-3-K (-T/O)			
NAPB○S-15A-10-□ (-T/O)			NAPF○S-10A-10-K (-T/O)			
NAPB○S-15A-15-□ (-T/O)			NAPF○S-10A-15-K (-T/O)			
NAPB○S-20-6-□ (-T/O)	PBG-20-□	TN-PF-20-M5	NAPB○S-20-6-K (-T/O)			
NAPB○S-20-15-□ (-T/O)			NAPB○S-20-15-K (-T/O)			
NAPB○S-20-30-□ (-T/O)			NAPB○S-20-30-K (-T/O)			
NAPB○S-30-6-□ (-T/O)	PBG-30-□	TN-PF-25-M6	NAPF○S-20B-6-K (-T/O)			
NAPB○S-30-15-□ (-T/O)			NAPF○S-20B-15-K (-T/O)			
NAPB○S-30-30-□ (-T/O)			NAPF○S-20B-30-K (-T/O)			
NAPB○S-40-6-□ (-T/O)	PBG-40-□		NAPF○S-20B-6-K (-T/O)			
NAPB○S-40-15-□ (-T/O)			NAPF○S-20B-15-K (-T/O)			
NAPB○S-40-30-□ (-T/O)			NAPF○S-20B-30-K (-T/O)			
NAPB○S-50-6-□ (-T/O)	PBG-50-□	TN-PF-50-M6	NAPF○S-20B-6-K (-T/O)			
NAPB○S-50-15-□ (-T/O)			NAPF○S-20B-15-K (-T/O)			
NAPB○S-50-30-□ (-T/O)			NAPF○S-20B-30-K (-T/O)			
NAPB○S-75-10-□	PBG-75-□	Screw the fitting directly into the female screw in the cup	NAPF○S-60-10-K	Rc1/8 (Female)	-	
NAPB○S-75-30-□			NAPF○S-60-30-K			
NAPB○S-75-50-□			NAPF○S-60-50-K			
NAPB○S-110-20-□	PBG-110-□	Mounting by bolts(4 pieces) those are attached to the fitting	NAPF○S-120-20-K	Rc1/4 (Female)	-	
NAPB○S-110-50-□			NAPF○S-120-50-K			
NAPB○S-150-20-□	PBG-150-□		NAPF○S-120-20-K			
NAPB○S-150-50-□			NAPF○S-120-50-K			

※□ in the table indicates the cup material.
※○ in the table indicates the vacuum port (T or Y).

NAPBTS·YS Cup with Spring Fitting

Dimensions

(mm)

NAPBT/YS-10A

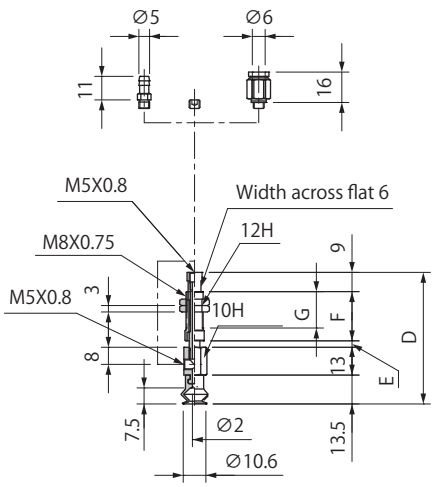

Model number	D	E	F	G	Weight (g)
NAPBT/YS-10A-3-□ (-T/O)	61.5	3	23	17	18
NAPBT/YS-10A-10-□ (-T/O)	68.5	10			18.5
NAPBT/YS-10A-15-□ (-T/O)	81	15	30.5	24.5	21

※□ in the table indicates the cup material.
※ The weight value is when NBR (Nitrile rubber) / without connector selected.

NAPBT/YS-15A

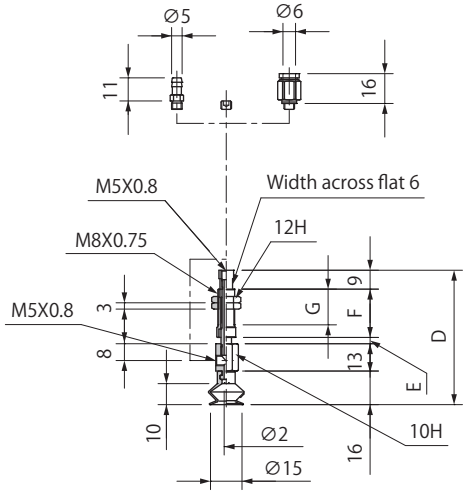

Model number	D	E	F	G	Weight (g)
NAPBT/YS-15A-3-□ (-T/O)	64	3	23	17	18
NAPBT/YS-15A-10-□ (-T/O)	71	10			18.5
NAPBT/YS-15A-15-□ (-T/O)	83.5	15	30.5	24.5	21

※□ in the table indicates the cup material.
※ The weight value is when NBR (Nitrile rubber) / without connector selected.

NAPBT/YS-20

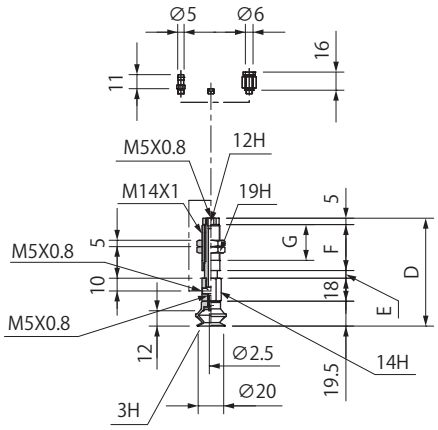

Model number	D	E	F	G	Weight (g)
NAPBT/YS-20-6-□ (-T/O)	84.5	6	36	28	67
NAPBT/YS-20-15-□ (-T/O)	93.5	15			72
NAPBT/YS-20-30-□ (-T/O)	130.5	30	58	50	97

※□ in the table indicates the cup material.
※ The weight value is when NBR (Nitrile rubber) / without connector selected.

NAPBT/YS-30

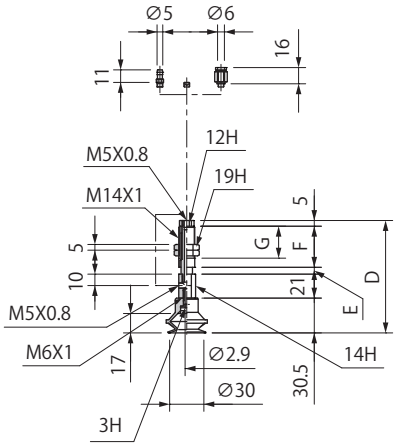

Model number	D	E	F	G	Weight (g)
NAPBT/YS-30-6-□ (-T/O)	98.5	6	36	28	72
NAPBT/YS-30-15-□(-T/O)	107.5	15			77
NAPBT/YS-30-30-□(-T/O)	144.5	30	58	50	102

※□ in the table indicates the cup material.
※ The weight value is when NBR (Nitrile rubber) / without connector selected.

Common Specifications

Connector Weight(g)

Symbol	Tube O.D ϕ 6
T	1.5
O	4.0

Dimensions

(mm)

NAPBT/YS-40

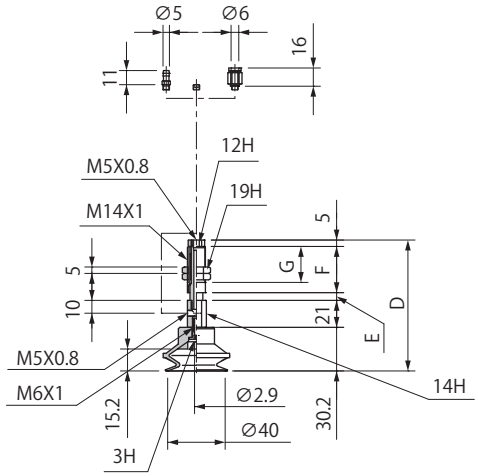

Model number	D	E	F	G	Weight (g)
NAPBT/YS-40-6-□ (-T/O)	98.2	6	36	28	78
NAPBT/YS-40-15-□ (-T/O)	107.2	15			83
NAPBT/YS-40-30-□ (-T/O)	144.2	30	58	50	108

※□ in the table indicates the cup material.
※ The weight value is when NBR（Nitrile rubber）/ without connector selected.

NAPBT/YS-50

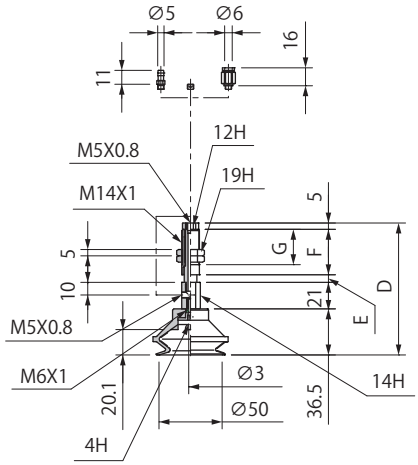

Model number	D	E	F	G	Weight (g)
NAPBT/YS-50-6-□ (-T/O)	104.5	6	36	28	92
NAPBT/YS-50-15-□ (-T/O)	113.5	15			97
NAPBT/YS-50-30-□ (-T/O)	150.5	30	58	50	122

※□ in the table indicates the cup material.
※ The weight value is when NBR（Nitrile rubber）/ without connector selected.

NAPBT/YS-75

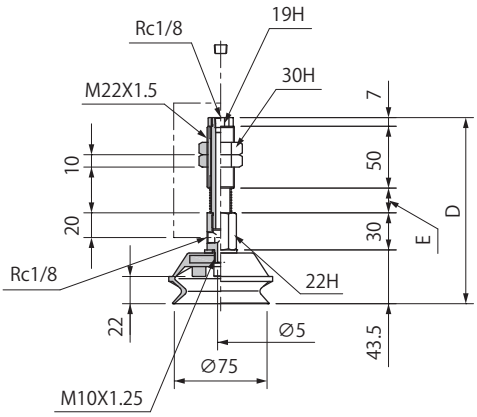

Model number	D	E	Weight (g)
NAPBT/YS-75-10-□	150.5	20	339
NAPBT/YS-75-30-□	180.5	50	373
NAPBT/YS-75-50-□	205.5	75	400

※□ in the table indicates the cup material.
※ The weight value is when NBR（Nitrile rubber）selected.

NAPBT/YS-110

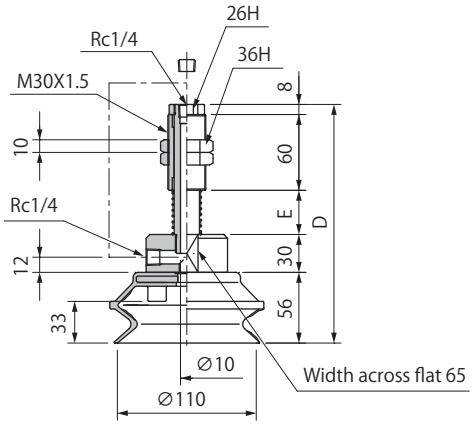

Model number	D	E	Weight (g)
NAPBT/YS-110-20-□	189	35	1194
NAPBT/YS-110-50-□	229	75	1276

※□ in the table indicates the cup material.
※ The weight value is when NBR（Nitrile rubber）selected.

Common Specifications

Connector Weight(g)

Symbol	Tube O.D ϕ 6
T	1.5
O	4.0

NAPBTS•YS Cup with Spring Fitting

Dimensions

(mm)

NAPBT/YS-150

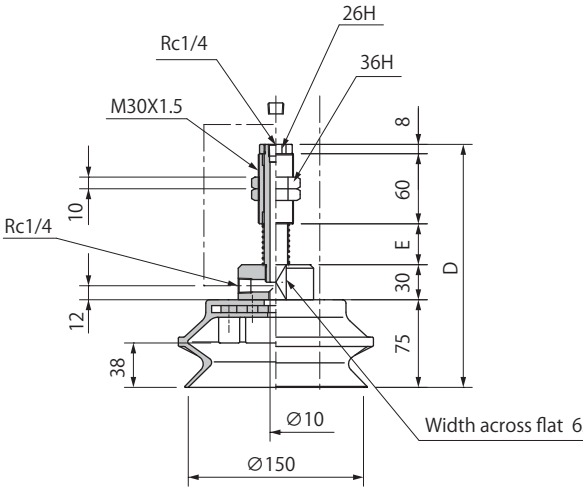

Model number	D	E	Weight (g)
NAPBT/YS-150-20-□	208	35	1704
NAPBT/YS-150-50-□	248	75	1786

※□ in the table indicates the cup material.
※ The weight value is when NBR（Nitrile rubber）selected.

02
Suction Cup
PA
PB
PC
PCD
PD
PF
PFO
PH
PJ
CORE
PK2
PK2B
PK2L
PL
PN
PN-B
PP
PQ
PR
PU
PW
RA
SM
TN

NAPBTH•YH Cup with Non-rotation Spring Fitting

Consisting of fitting, setting screw, suction cup.

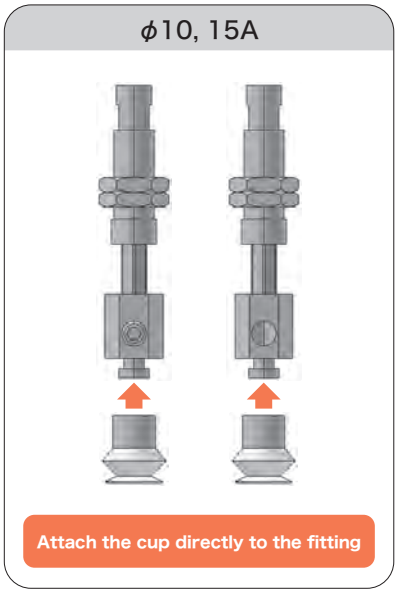

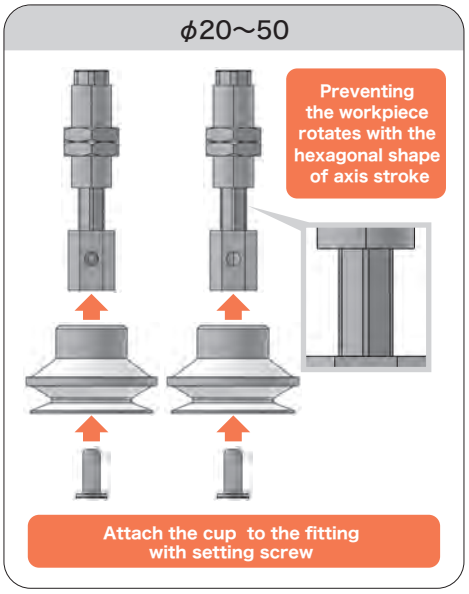

How to Order

NAPB T H – 10A – 3 – N – T

① ② ③ ④

① Vacuum Port

T	Top
Y	Side

② Cup Size - Stroke (mm)

Symbol	Cup size Stroke	Symbol	Cup size Stroke
10A-3	ϕ10-3	30-6	ϕ30-6
10A-10	ϕ10-10	30-15	ϕ30-15
10A-15	ϕ10-15	30-30	ϕ30-30
15A-3	ϕ15-3	40-6	ϕ40-6
15A-10	ϕ15-10	40-15	ϕ40-15
15A-15	ϕ15-15	40-30	ϕ40-30
20-6	ϕ20-6	50-6	ϕ50-6
20-15	ϕ20-15	50-15	ϕ50-15
20-30	ϕ20-30	50-30	ϕ50-30

③ Cup Rubber Material

Symbol	Material
N	NBR(Nitrile rubber)
S	Silicone rubber
U	Urethane rubber
F	Fluorine rubber
NE	Conductive NBR (Nitrile rubber)
SE	Conductive silicone rubber

※ Please consult with us for other material.

④ Connector

Blank	N/A
T	Barb
O	Push-in

Spring Specifications

Cup size	Unit	ϕ10, 15			ϕ20～50		
Stroke	mm	3	10	15	6	15	30
Spring load at 0 stroke	N	0.61		0.64	2.45		2.9
Spring load at full stroke	N	0.77	1.17		3.43	4.9	5.88

Combination Table

Model number	Cup	Setting screw	Fitting	Piping specifications		
				Without connector・Blank	Barb connector・T	Push-in connector・O
NAPB○H-10A-3-□ (-T/O)	PBG-10A-□	Attach the cup directly to the fitting	NAPF○H-5A-3-K (-T/O)	M5X0.8 (Female)	ϕ6 X 4	
NAPB○H-10A-10-□ (-T/O)			NAPF○H-5A-10-K (-T/O)			
NAPB○H-10A-15-□ (-T/O)			NAPF○H-5A-15-K (-T/O)			
NAPB○H-15A-3-□ (-T/O)	PBG-15A-□		NAPF○H-5A-3-K (-T/O)			
NAPB○H-15A-10-□ (-T/O)			NAPF○H-5A-10-K (-T/O)			
NAPB○H-15A-15-□ (-T/O)			NAPF○H-5A-15-K (-T/O)			
NAPB○H-20-6-□ (-T/O)	PBG-20-□	TN-PF-20-M5	NAPB○H-20-6-K (-T/O)			
NAPB○H-20-15-□ (-T/O)			NAPB○H-20-15-K (-T/O)			
NAPB○H-20-30-□ (-T/O)			NAPB○H-20-30-K (-T/O)			
NAPB○H-30-6-□ (-T/O)	PBG-30-□	TN-PF-25-M6	NAPF○H-20B-6-K (-T/O)			
NAPB○H-30-15-□ (-T/O)			NAPF○H-20B-15-K (-T/O)			
NAPB○H-30-30-□ (-T/O)			NAPF○H-20B-30-K (-T/O)			
NAPB○H-40-6-□ (-T/O)	PBG-40-□		NAPF○H-20B-6-K (-T/O)			
NAPB○H-40-15-□ (-T/O)			NAPF○H-20B-15-K (-T/O)			
NAPB○H-40-30-□ (-T/O)			NAPF○H-20B-30-K (-T/O)			
NAPB○H-50-6-□ (-T/O)	PBG-50-□	TN-PF-50-M6	NAPF○H-20B-6-K (-T/O)			
NAPB○H-50-15-□ (-T/O)			NAPF○H-20B-15-K (-T/O)			
NAPB○H-50-30-□ (-T/O)			NAPF○H-20B-30-K (-T/O)			

※□ in the table indicates the cup material.
※○ in the table indicates the vacuum port (T or Y).

NAPBTH•YH Cup with Non-rotation Spring Fitting

Dimensions

(mm)

NAPBT/YH-10A

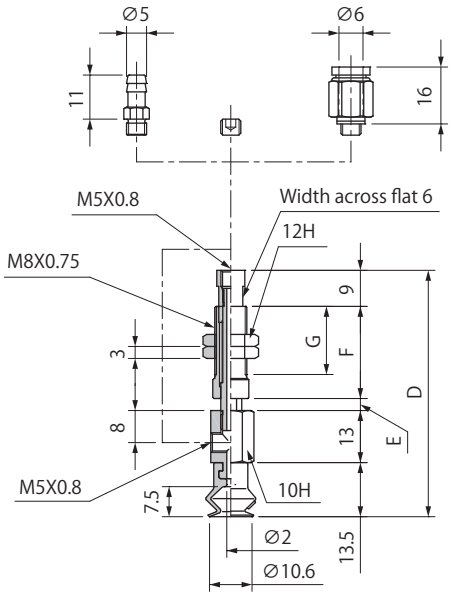

Model number	D	E	F	G	Weight (g)
NAPBT/YH-10A-3-□ (-T/O)	61.5	3	23	17	18.5
NAPBT/YH-10A-10-□ (-T/O)	68.5	10			19
NAPBT/YH-10A-15-□ (-T/O)	81	15	30.5	24.5	22

※□ in the table indicates the cup material.
※ The weight value is when NBR（Nitrile rubber）/ without connector selected.

NAPBT/YH-15A

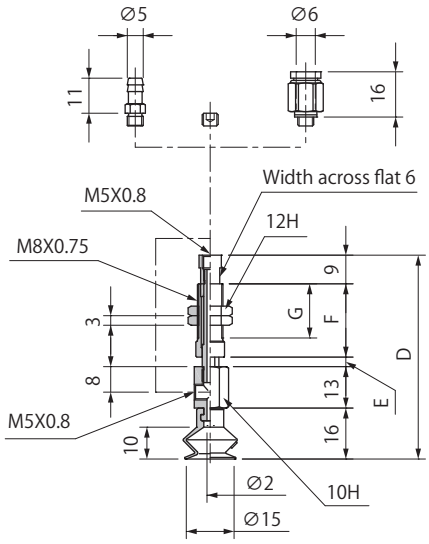

Model number	D	E	F	G	Weight (g)
NAPBT/YH-15A-3-□ (-T/O)	64	3	23	17	18.5
NAPBT/YH-15A-10-□ (-T/O)	71	10			19
NAPBT/YH-15A-15-□ (-T/O)	83.5	15	30.5	24.5	22

※□ in the table indicates the cup material.
※ The weight value is when NBR（Nitrile rubber）/ without connector selected.

NAPBT/YH-20

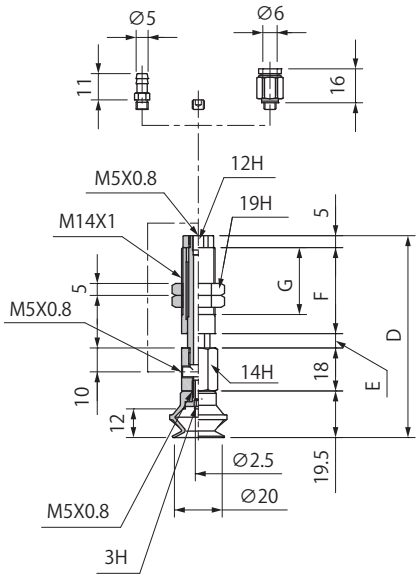

Model number	D	E	F	G	Weight (g)
NAPBT/YH-20-6-□ (-T/O)	84.5	6	36	28	63.5
NAPBT/YH-20-15-□ (-T/O)	93.5	15			68.5
NAPBT/YH-20-30-□ (-T/O)	130.5	30	58	50	92.5

※□ in the table indicates the cup material.
※ The weight value is when NBR（Nitrile rubber）/ without connector selected.

NAPBT/YH-30

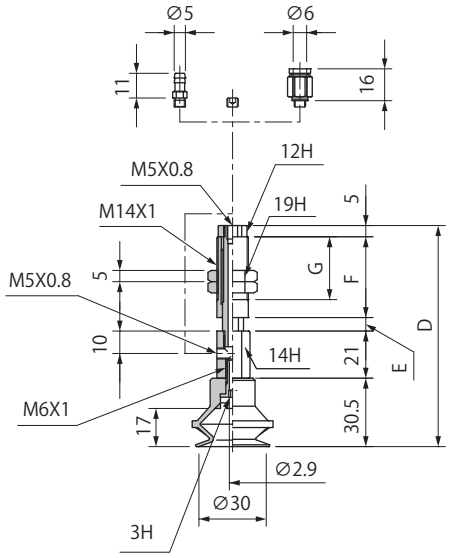

Model number	D	E	F	G	Weight (g)
NAPBT/YH-30-6-□ (-T/O)	98.5	6	36	28	70.5
NAPBT/YH-30-15-□ (-T/O)	107.5	15			75.5
NAPBT/YH-30-30-□ (-T/O)	144.5	30	58	50	99.5

※□ in the table indicates the cup material.
※ The weight value is when NBR（Nitrile rubber）/ without connector selected.

Dimensions

(mm)

NAPBT/YH-40

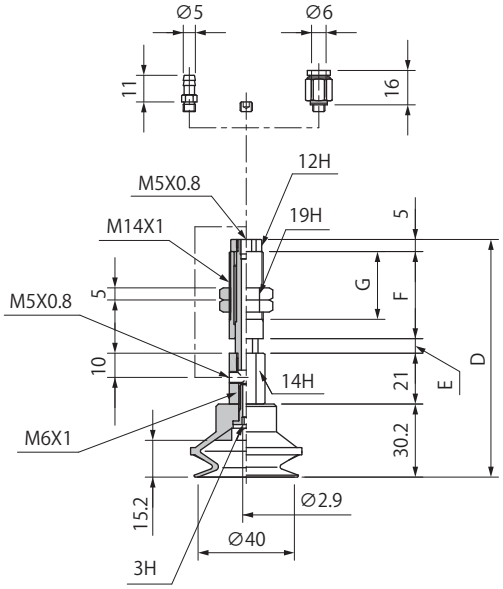

Model number	D	E	F	G	Weight (g)
NAPBT/YH-40-6-□ (-T/O)	98.2	6	36	28	76.5
NAPBT/YH-40-15-□ (-T/O)	107.2	15			81.5
NAPBT/YH-40-30-□ (-T/O)	144.2	30	58	50	105.5

※□ in the table indicates the cup material.
※ The weight value is when NBR（Nitrile rubber）/ without connector selected.

NAPBT/YH-50

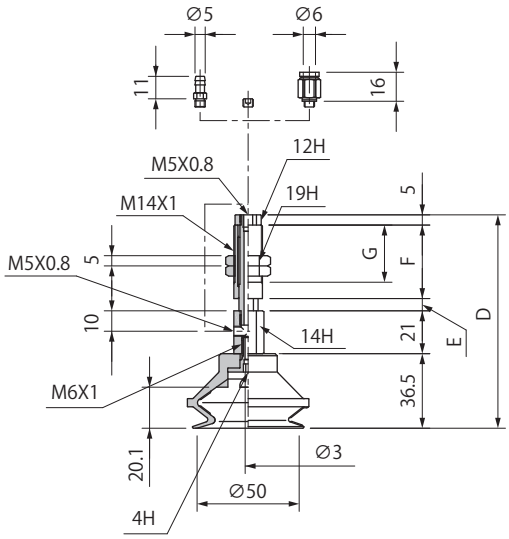

Model number	D	E	F	G	Weight (g)
NAPBT/YH-50-6-□ (-T/O)	104.5	6	36	28	95
NAPBT/YH-50-15-□ (-T/O)	113.5	15			100
NAPBT/YH-50-30-□ (-T/O)	150.5	30	58	50	124

※□ in the table indicates the cup material.
※ The weight value is when NBR（Nitrile rubber）/ without connector selected.

Common Specifications

Connector Weight(g)

Symbol	Tube O.D ϕ 6
T	1.5
O	4.0

PC Series

3 Bellows Cup

RoHS

For workpieces with the oblique surface or spherical surface!

Can

Light bulb

Pipe

Wide range of cup sizes.

ϕ3	ϕ3.5	ϕ5	ϕ7	ϕ10	ϕ15	ϕ18	ϕ20	ϕ30	ϕ40	ϕ60	ϕ90

Various fittings for many kinds of applications.

Fixed fitting

Spring fitting

Compact type fitting

Suction Cup

PCG	Cup size (mm) ϕ3～90		P.227

Fitting

Type	Applicable cup size (mm)	Stroke (mm)	Vacuum port	Piping・Connector	Page
Cup with compact fixed fitting PS-□-C-F	ϕ 5, 7	N/A	Top	Female screw	P.231
Cup with compact fixed fitting PS-□-C-M	ϕ 5, 7	N/A	Top	Male screw	P.231
Cup with fixed fitting PCTK	ϕ 5～60	N/A	Top	Barb	P.233
	ϕ 90			Female screw	
Cup with fixed fitting PCYK	ϕ 5～60	N/A	Side	Barb	P.233
	ϕ 90			Female screw	
Cup With Compact Spring Fitting PSS	ϕ 5, 7	3,5	Top	Male screw	P.237
Cup with spring fitting NAPCTS	ϕ 5, 7	3, 6	Top	Female screw Push-in Barb	P.239
	ϕ 10～20	3, 10, 15			
	ϕ 30～60	6, 15, 30			
	ϕ 90	10, 30, 50		Female screw	
Cup with spring fitting NAPCYS	ϕ 5, 7	3, 6	Side	Female screw Push-in Barb	P.239
	ϕ 10～20	3, 10, 15			
	ϕ 30～60	6, 15, 30			
	ϕ 90	10, 30, 50		Female screw	
Cup with non-rotation spring fitting NAPCTH	ϕ 5～20	3, 10, 15	Top	Female screw Push-in Barb	P.245
	ϕ 30～60	6, 15, 30			
Cup with non-rotation spring fitting NAPCYH	ϕ 5～20	3, 10, 15	Side	Female screw Push-in Barb	P.245
	ϕ 30～60	6, 15, 30			
Setting screw	ϕ 3～90	—	—	—	P.503

Suction Cup Selection Guide P.163

PCG 3 Bellows Cup

How to Order

PCG – 5 – N
① ②

① Cup Size (mm)

Symbol	Cup size	Symbol	Cup size
3	ϕ3	18	ϕ18
3.5	ϕ3.5	20	ϕ20
5	ϕ5	30	ϕ30
7	ϕ7	40	ϕ40
10	ϕ10	60	ϕ60
15	ϕ15	90	ϕ90

② Cup Rubber Material

Symbol	Material
N	NBR(Nitrile rubber)
S	Silicone rubber

※ Please consult with us for other material.

Cup Rubber Material Standard Specifications

Symbol	Material	Hardness (A/s)	Ambient temperature (℃)	Color
N	NBR(Nitrile rubber)	55	-26 ～ 120	Black
S	Silicone rubber	55	-60 ～ 250	Translucent white

Applicable Rubber Material Table

Material	Color	Symbol	Round type											
			3	3.5	5	7	10	15	18	20	30	40	60	90
NBR(Nitrile rubber)	Black	N	○	●	●	●	●	●	●	●	●	●	●	●
Silicone rubber	Translucent white	S	○	●	●	●	●	●	●	●	●	●	●	●

●: In stock ○Made to order ×: None
※Please consult with us for other material.

Dimensions

(mm)

PCG-3

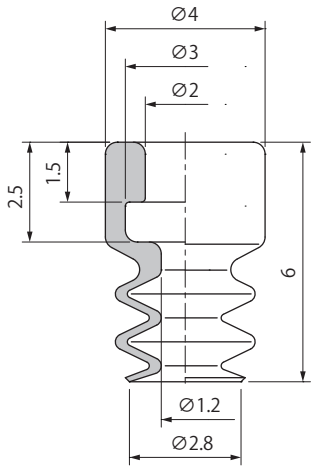

PCG-3.5

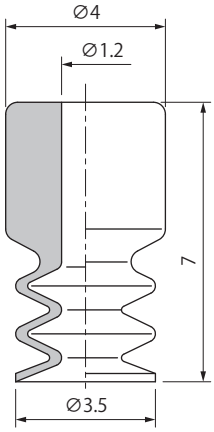

PCG-5

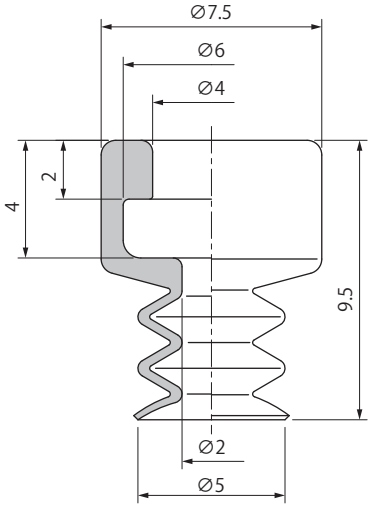

PCG-7

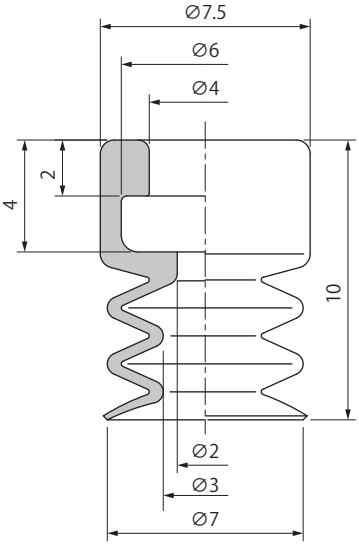

PCG-10

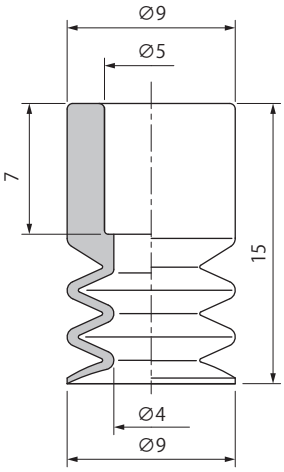

PCG-15

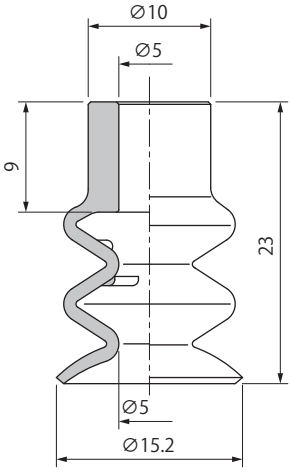

Weight

(g)

Model ＼ Material	N	S	Applicable setting screw (Screw specifications)
PCG-3	0.1	0.1	TN-PS-2A-M3 (Male M3X0.5) TN-PS-2A-M3F (Female M3X0.5) TN-PS-2A-M5 (Male M5X0.8)
PCG-3.5	0.1	0.1	-
PCG-5	0.2	0.2	TN-PS-10-M5 (Male M5X0.8) TN-PS-10-M5F (Female M5X0.8)
PCG-7	0.2	0.2	
PCG-10	0.6	0.6	TN-PC-10-M5 (Male M5X0.8)
PCG-15	1.6	1.6	

※Please refer to P.503 for setting screw detailed specifications.

Symbol	Material
N	NBR(Nitrile rubber)
S	Silicone rubber

PCG 3 Bellows Cup

Dimensions

(mm)

PCG-18

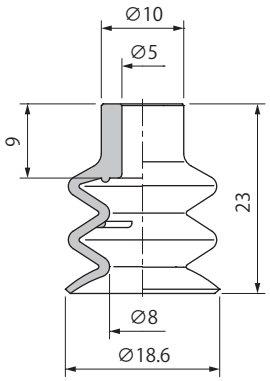

PCG-20

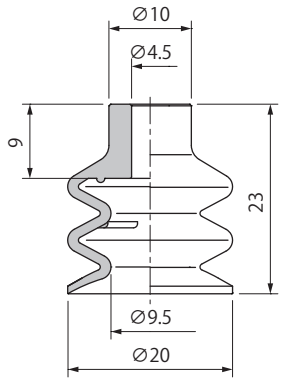

PCG-30

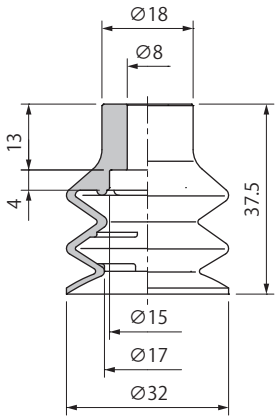

PCG-40

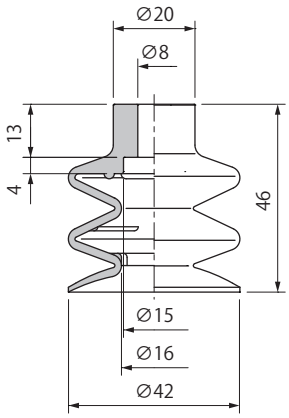

PCG-60

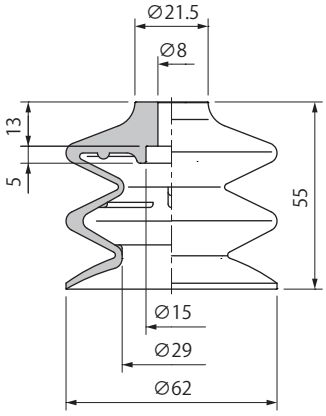

PCG-90

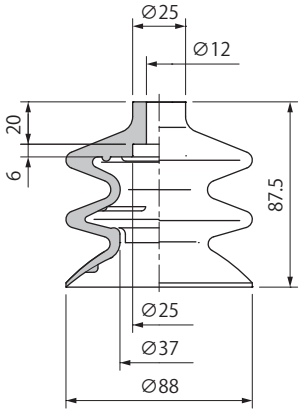

Weight

(g)

Model ＼ Material	N	S	Applicable setting screw (Screw specifications)
PCG-18	2.3	2.3	TN-PC-10-M5 (Male M5X0.8)
PCG-20	2.5	2.5	
PCG-30	9.6	9.6	TN-PC-30-M6 (Male M6X1.0) TN-PC-30-M8 (Male M8X1.25)
PCG-40	19.5	19.5	
PCG-60	49.0	49.0	
PCG-90	160.0	160.0	TN-PC-90-M12 (Male M12X1.25)

Symbol	Material
N	NBR(Nitrile rubber)
S	Silicone rubber

※Please refer to P.503 for setting screw detailed specifications.

02
Suction Cup
PA
PB
PC
PCD
PD
PF
PFO
PH
PJ
CORE
PK2
PK2B
PK2L
PL
PN
PN-B
PP
PQ
PR
PU
PW
RA
SM
TN

PS Cup with Compact Fixed Fitting

Male Screw

Female Screw

Simple construction of the cup and the screw.

ϕ5, 7

Screw and the cup can be disassembled

Attach the cup directly to the screw

Model number	Cup	Setting screw	Screw size
PS-5-C-M- □	PCG-5- □	TN-PS-10-M5	M5X0.8
PS-7-C-M- □	PCG-7- □		

Model number	Cup	Setting screw	Screw size
PS-5-C-F- □	PCG-5- □	TN-PS-10-M5F	M5X0.8
PS-7-C-F- □	PCG-7- □		

※□ in the table indicates the cup material.

How to Order

PS – 5 – C – M – N

① ② ③

① Cup Size (mm)

Symbol	Cup size
5	ϕ5
7	ϕ7

② Screw Type

M	Male screw
F	Female screw

③ Cup Rubber Material

Symbol	Material
N	NBR(Nitrile rubber)
S	Silicone rubber

※ Please consult with us for other material.

Dimensions

(mm)

PS-5-C-M

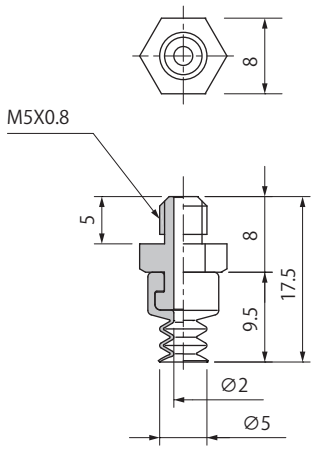

PS-7-C-M

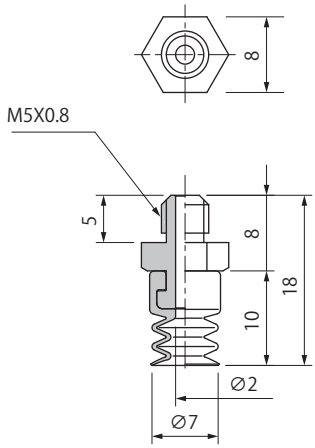

PS-5-C-F

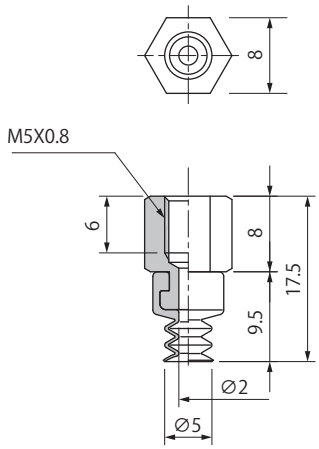

PS-7-C-F

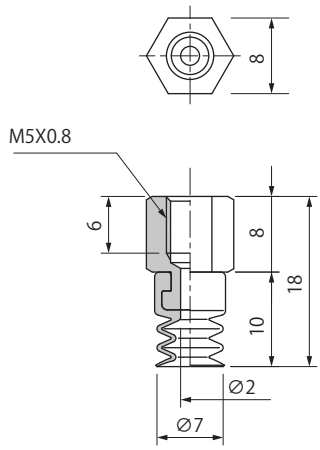

Model number	Weight (g)
PS-5-C-M- □	1
PS-7-C-M- □	
PS-5-C-F- □	1.5
PS-7-C-F- □	

※□ in the table indicates the cup material.
※ The weight value is when NBR (Nitrile rubber) selected.

PCTK•YK Cup with Fixed Fitting

Consisting of fitting, setting screw, suction cup.

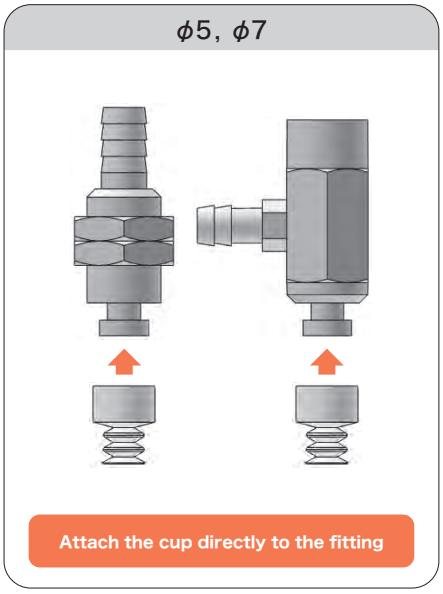

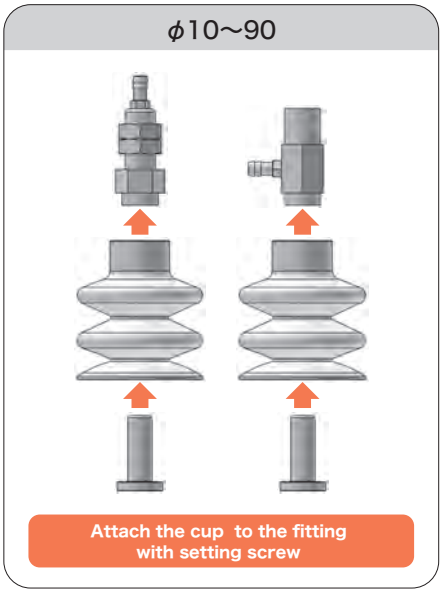

How to Order

PC T K – 5 – N
① ② ③

① Vacuum Port

T	Top
Y	Side

② Cup Size (mm)

Symbol	Cup size	Symbol	Cup size
5	ϕ5	20	ϕ20
7	ϕ7	30	ϕ30
10	ϕ10	40	ϕ40
15	ϕ15	60	ϕ60
18	ϕ18	90	ϕ90

③ Cup Rubber Material

Symbol	Material
N	NBR(Nitrile rubber)
S	Silicone rubber

※ Please consult with us for other material.

Combination Table

Top Port

Model number	Cup	Setting screw	Fitting	Piping specifications	
PCTK-5- □	PCG-5- □	Attach the cup directly to the fitting	PFTK-5A-K	Barb	ϕ6X4
PCTK-7- □	PCG-7- □				
PCTK-10- □	PCG-10- □	TN-PC-10-M5	PFTK-15-K		
PCTK-15- □	PCG-15- □				
PCTK-18- □	PCG-18- □				
PCTK-20- □	PCG-20- □				
PCTK-30- □	PCG-30- □	TN-PC-30-M8	PFTK-50-K		
PCTK-40- □	PCG-40- □				
PCTK-60- □	PCG-60- □				
PCTK-90- □	PCG-90- □	TN-PC-90-M12	PCTK-90-K	Rc1/8 (Female)	

※□ in the table indicates the cup material.

Side Port

Model number	Cup	Setting screw	Fitting	Piping specifications	
PCYK-5- □	PCG-5- □	Attach the cup directly to the fitting	PFYK-5A-K	Barb	ϕ6X4
PCYK-7- □	PCG-7- □				
PCYK-10- □	PCG-10- □	TN-PC-10-M5	PFYK-15-K		
PCYK-15- □	PCG-15- □				
PCYK-18- □	PCG-18- □				
PCYK-20- □	PCG-20- □				
PCYK-30- □	PCG-30- □	TN-PC-30-M8	PFYK-50-K		
PCYK-40- □	PCG-40- □				
PCYK-60- □	PCG-60- □				
PCYK-90- □	PCG-90- □	TN-PC-90-M12	PCYK-90-K	Rc1/8 (Female)	

※□ in the table indicates the cup material.

PCTK•YK Cup with Fixed Fitting

Dimensions

(mm)

Top Port PCTK-5/7

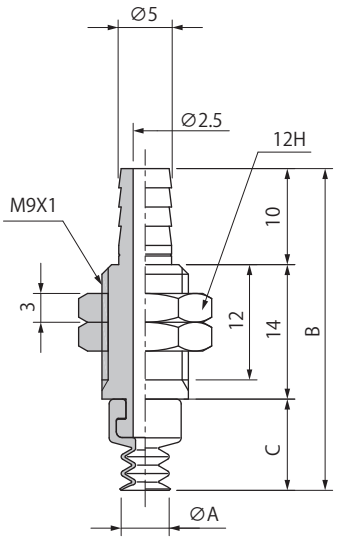

Model number	A	B	C	Weight (g)
PCTK-5-□	5	33.5	9.5	11
PCTK-7-□	7	34	10	

※□ in the table indicates the cup material.
※ The weight value is when NBR（Nitrile rubber）selected.

Top Port PCTK-10/15/18/20

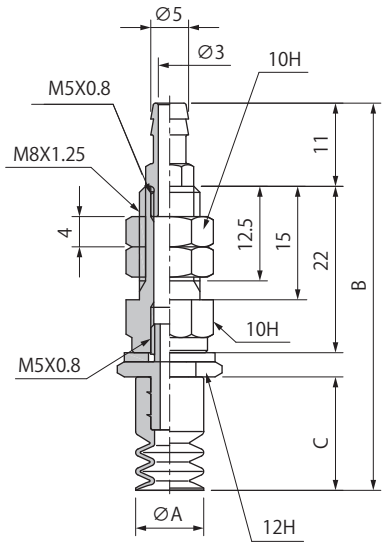

Model number	A	B	C	Weight (g)
PCTK-10-□	9	51.2	15	22
PCTK-15-□	15.2	59.2	23	
PCTK-18-□	18.6			
PCTK-20-□	20			

※□ in the table indicates the cup material.
※ The weight value is when NBR（Nitrile rubber）selected.

Top Port PCTK-30/40/60

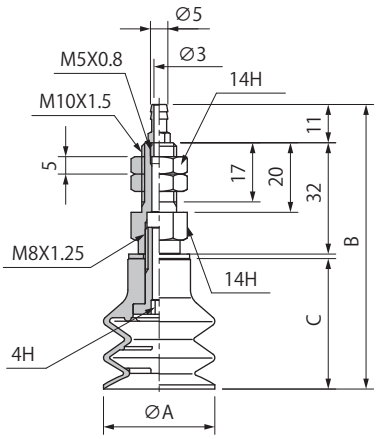

Model number	A	B	C	Weight (g)
PCTK-30-□	32	81.7	37.5	46
PCTK-40-□	42	90.2	46	55
PCTK-60-□	62	99.2	55	85

※□ in the table indicates the cup material.
※ The weight value is when NBR（Nitrile rubber）selected.

Top Port PCTK-90

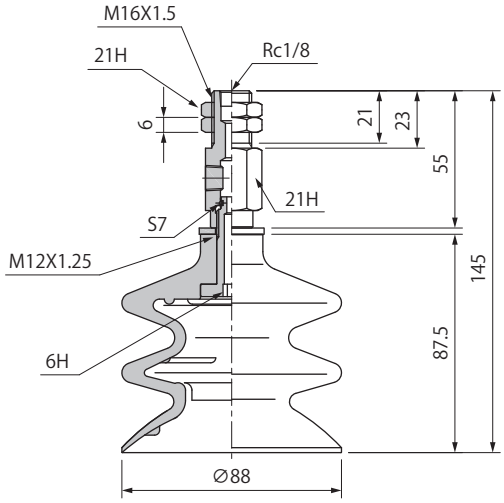

Model number	Weight (g)
PCTK-90-□	300

※□ in the table indicates the cup material.
※ The weight value is when NBR（Nitrile rubber）selected.

Dimensions

(mm)

Side Port PCYK-5/7

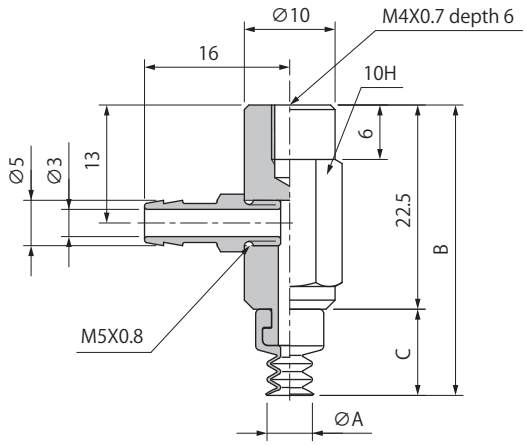

Model number	A	B	C	Weight (g)
PCYK-5- □	5	32	9.5	16
PCYK-7- □	7	32.5	10	

※□ in the table indicates the cup material.
※ The weight value is when NBR（Nitrile rubber）selected.

Side Port PCYK-10/15/18/20

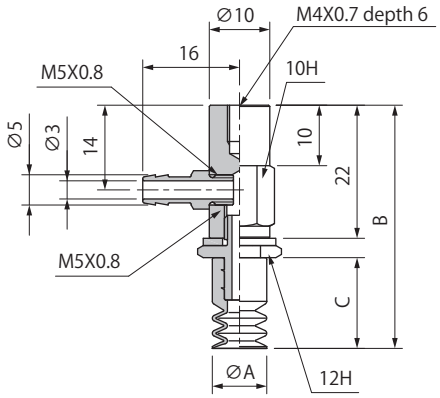

Model number	A	B	C	Weight (g)
PCYK-10- □	9	40.2	15	22
PCYK-15- □	15.2	48.2	23	
PCYK-18- □	18.6			
PCYK-20- □	20			

※□ in the table indicates the cup material.
※ The weight value is when NBR（Nitrile rubber）selected.

Side Port PCYK-30/40/60

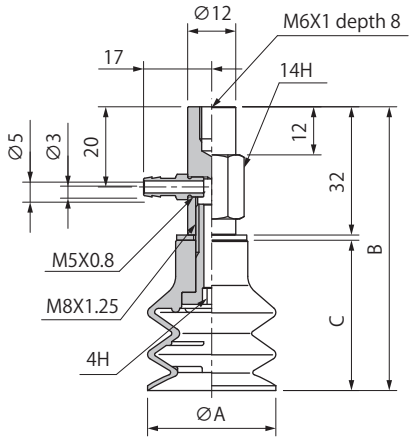

Model number	A	B	C	Weight (g)
PCYK-30- □	32	70.7	37.5	46
PCYK-40- □	42	79.2	46	55
PCYK-60- □	62	88.2	55	85

※□ in the table indicates the cup material.
※ The weight value is when NBR（Nitrile rubber）selected.

Side Port PCYK-90

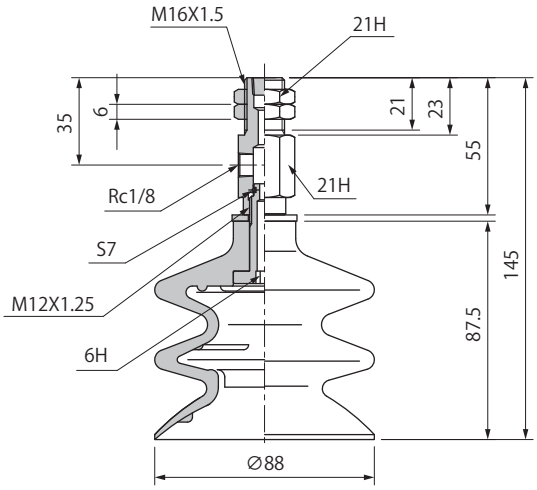

Model number	Weight (g)
PCYK-90- □	300

※□ in the table indicates the cup material.
※ The weight value is when NBR（Nitrile rubber）selected.

PSS Cup with Compact Spring Fitting

Simple construction of the cup and the fitting.

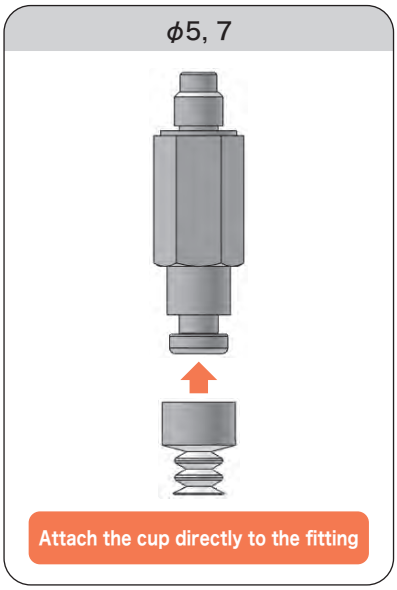

How to Order

PSS – L3 – PCG – 5 – N

① ② ③

① Stroke (mm)

Symbol	Length
L3	3
L5	5

② Cup Size (mm)

Symbol	Cup size
5	ϕ5
7	ϕ7

③ Cup Rubber Material

Symbol	Material
N	NBR (Nitrile rubber)
S	Silicone rubber

※ Please consult with us for other material.

Combination Table

Model number	Cup	Fitting	Piping specifications
PSS-L3-PCG-5-□	PCG-5-□	PSS-L3	M5X0.8 (Male)
PSS-L3-PCG-7-□	PCG-7-□		
PSS-L5-PCG-5-□	PCG-5-□	PSS-L5	
PSS-L5-PCG-7-□	PCG-7-□		

※□ in the table indicates the cup material.

Spring Specifications

Cup size	Unit	ϕ5, 7	
Stroke	mm	3	5
Spring load at 0 stroke	N	1.5	1.62
Spring load at full stroke	N	2.3	3.2
Tightening torque	N・m	0.58～0.68	

※Due to structural reason, 「lift-up」 may occur in case vacuum pressure is more than -65kPa.
The weight of non 「lift-up」 in horizontal lifting is about over 200g.
Screw must be tightened in recommended tightening torque, ortherwise malfunction would occur.

Dimensions

(mm)

PSS-L3-PCG-5

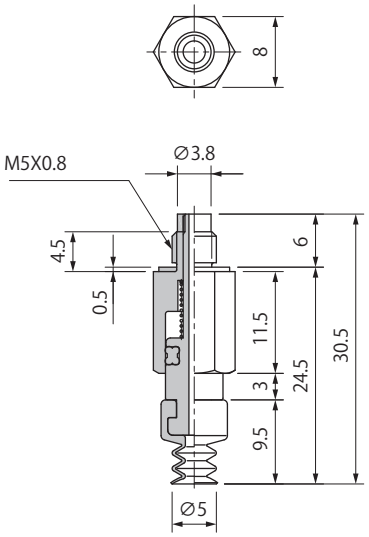

PSS-L3-PCG-7

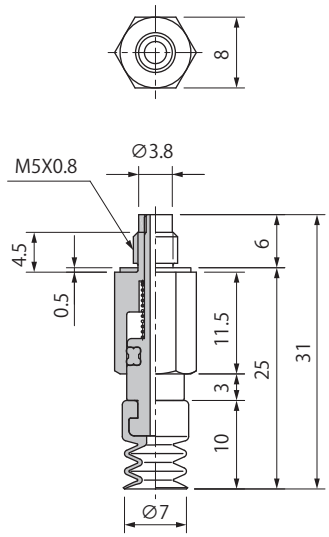

PSS-L5-PCG-5

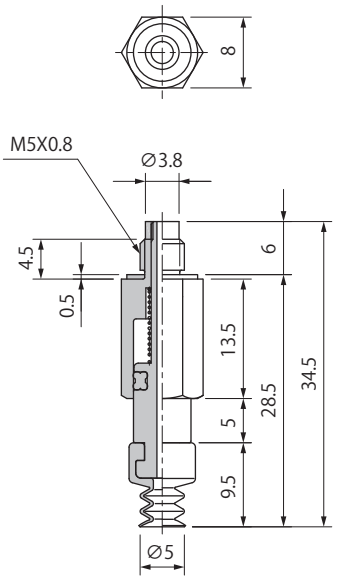

PSS-L5-PCG-7

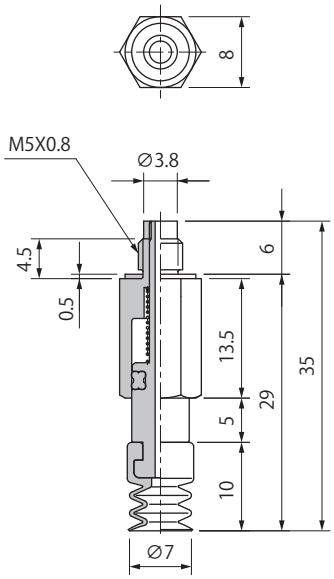

Model number	Weight (g)
PSS-L3-PCG-5-□	6
PSS-L3-PCG-7-□	
PSS-L5-PCG-5-□	7
PSS-L5-PCG-7-□	

※□ in the table indicates the cup material.
※ The weight value is when NBR (Nitrile rubber) selected.

NAPCTS·YS Cup with Spring Fitting

Consisting of fitting, setting screw, suction cup.

ϕ5, ϕ7

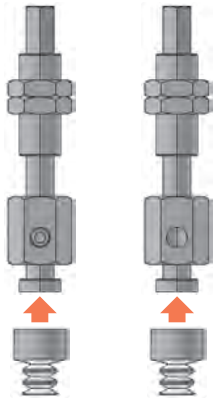

Attach the cup directly to the fitting

ϕ10~90

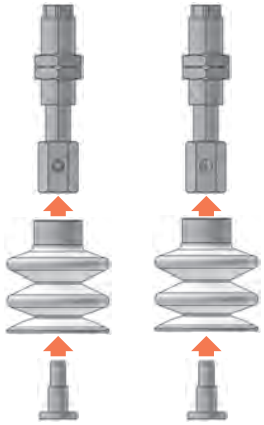

Attach the cup to the fitting with setting screw

How to Order

NAPC T S – 5 – 3 – N – T

① ② ③ ④

① Vacuum Port

T	Top
Y	Side

② Cup Size - Stroke (mm)

Symbol	Cup size Stroke	Symbol	Cup size Stroke	Symbol	Cup size Stroke
5-3	ϕ5-3	18-3	ϕ18-3	40-6	ϕ40-6
5-6	ϕ5-6	18-10	ϕ18-10	40-15	ϕ40-15
7-3	ϕ7-3	18-15	ϕ18-15	40-30	ϕ40-30
7-6	ϕ7-6	20-3	ϕ20-3	60-6	ϕ60-6
10-3	ϕ10-3	20-10	ϕ20-10	60-15	ϕ60-15
10-10	ϕ10-10	20-15	ϕ20-15	60-30	ϕ60-30
10-15	ϕ10-15	30-6	ϕ30-6	90-10	ϕ90-10
15-3	ϕ15-3	30-15	ϕ30-15	90-30	ϕ90-30
15-10	ϕ15-10	30-30	ϕ30-30	90-50	ϕ90-50
15-15	ϕ15-15				

③ Cup Rubber Material

Symbol	Material
N	NBR (Nitrile rubber)
S	Silicone rubber

※ Please consult with us for other material.

④ Connector

Blank	N/A
T	Barb
O	Push-in

※ϕ90 can not be selected "T" and "O"

Spring Specifications

Cup size	Unit	ϕ5, 7		ϕ10~20			ϕ30~60			ϕ90		
Stroke	mm	3	6	3	10	15	6	15	30	10	30	50
Spring load at 0 stroke	N	0.49		0.61		0.64	2.45		2.9	8.82	6.76	8.33
Spring load at full stroke	N	0.59	0.69	0.77	1.17		3.43	4.9	5.88	11.8	15.6	19.6

Combination Table

Model number	Cup	Setting screw	Fitting	Piping specifications		
				Without connector・Blank	Barb connector・T	Push-in connector・O
NAPC○S-5-3-□ (-T/O)	PCG-5-□	Attach the cup directly to the fitting	NAPF○S-5A-3-K (-T/O)	M3X0.5 (Female)	ϕ4X2.5	
NAPC○S-5-6-□ (-T/O)			NAPF○S-5A-6-K (-T/O)			
NAPC○S-7-3-□ (-T/O)	PCG-7-□		NAPF○S-5A-3-K (-T/O)			
NAPC○S-7-6-□ (-T/O)			NAPF○S-5A-6-K (-T/O)			
NAPC○S-10-3-□ (-T/O)	PCG-10-□	TN-PC-10-M5	NAPC○S-10-3-K (-T/O)	M5X0.8 (Female)	ϕ6 X 4	
NAPC○S-10-10-□ (-T/O)			NAPC○S-10-10-K (-T/O)			
NAPC○S-10-15-□ (-T/O)			NAPC○S-10-15-K (-T/O)			
NAPC○S-15-3-□ (-T/O)	PCG-15-□		NAPC○S-10-3-K (-T/O)			
NAPC○S-15-10-□ (-T/O)			NAPC○S-10-10-K (-T/O)			
NAPC○S-15-15-□ (-T/O)			NAPC○S-10-15-K (-T/O)			
NAPC○S-18-3-□ (-T/O)	PCG-18-□		NAPC○S-10-3-K (-T/O)			
NAPC○S-18-10-□ (-T/O)			NAPC○S-10-10-K (-T/O)			
NAPC○S-18-15-□ (-T/O)			NAPC○S-10-15-K (-T/O)			
NAPC○S-20-3-□ (-T/O)	PCG-20-□		NAPC○S-10-3-K (-T/O)			
NAPC○S-20-10-□ (-T/O)			NAPC○S-10-10-K (-T/O)			
NAPC○S-20-15-□ (-T/O)			NAPC○S-10-15-K (-T/O)			
NAPC○S-30-6-□ (-T/O)	PCG-30-□	TN-PC-30-M6	NAPF○S-20B-6-K (-T/O)			
NAPC○S-30-15-□ (-T/O)			NAPF○S-20B-15-K (-T/O)			
NAPC○S-30-30-□ (-T/O)			NAPF○S-20B-30-K (-T/O)			
NAPC○S-40-6-□ (-T/O)	PCG-40-□		NAPF○S-20B-6-K (-T/O)			
NAPC○S-40-15-□ (-T/O)			NAPF○S-20B-15-K (-T/O)			
NAPC○S-40-30-□ (-T/O)			NAPF○S-20B-30-K (-T/O)			
NAPC○S-60-6-□ (-T/O)	PCG-60-□		NAPF○S-20B-6-K (-T/O)			
NAPC○S-60-15-□ (-T/O)			NAPF○S-20B-15-K (-T/O)			
NAPC○S-60-30-□ (-T/O)			NAPF○S-20B-30-K (-T/O)			
NAPC○S-90-10-□	PCG-90-□	TN-PC-90-M12	NAPU○SB-60-10-K	Rc1/8 (Female)	-	
NAPC○S-90-30-□			NAPU○SB-60-30-K			
NAPC○S-90-50-□			NAPU○SB-60-50-K			

※□ in the table indicates the cup material.
※○ in the table indicates the vacuum port (T or Y).

NAPCTS·YS Cup with Spring Fitting

Dimensions

(mm)

NAPCT/YS-5

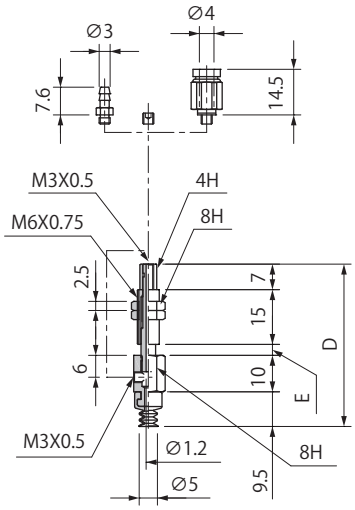

Model number	D	E	Weight(g)
NAPCT/YS-5-3-□ (-T/O)	44.5	3	7
NAPCT/YS-5-6-□ (-T/O)	47.5	6	

※□ in the table indicates the cup material.
※ The weight value is when NBR（Nitrile rubber）/ without connector selected.

NAPCT/YS-7

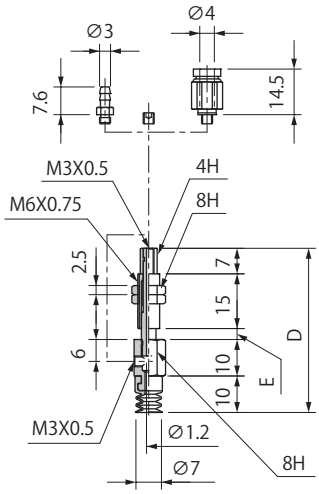

Model number	D	E	Weight(g)
NAPCT/YS-7-3-□ (-T/O)	45	3	7
NAPCT/YS-7-6-□ (-T/O)	48	6	

※□ in the table indicates the cup material.
※ The weight value is when NBR（Nitrile rubber）/ without connector selected.

NAPCT/YS-10

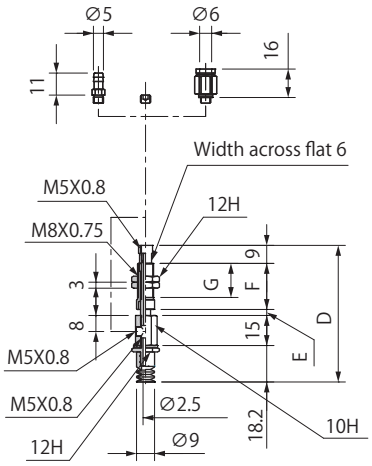

Model number	D	E	F	G	Weight(g)
NAPCT/YS-10-3-□ (-T/O)	68.2	3	23	17	22
NAPCT/YS-10-10-□ (-T/O)	75.2	10			22.5
NAPCT/YS-10-15-□ (-T/O)	87.7	15	30.5	24.5	25

※□ in the table indicates the cup material.
※ The weight value is when NBR（Nitrile rubber）/ without connector selected.

NAPCT/YS-15

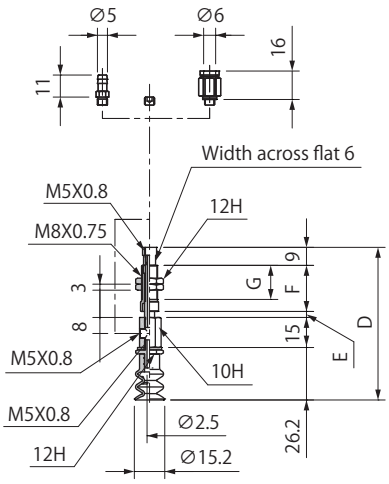

Model number	D	E	F	G	Weight(g)
NAPCT/YS-15-3-□ (-T/O)	76.2	3	23	17	23
NAPCT/YS-15-10-□ (-T/O)	83.2	10			23.5
NAPCT/YS-15-15-□ (-T/O)	95.7	15	30.5	24.5	26

※□ in the table indicates the cup material.
※ The weight value is when NBR（Nitrile rubber）/ without connector selected.

Common Specifications

Connector Weight(g)

Symbol	Tube O.D ϕ 4	Tube O.D ϕ 6
T	0.5	1.5
O	3.0	4.0

Dimensions

(mm)

NAPCT/YS-18

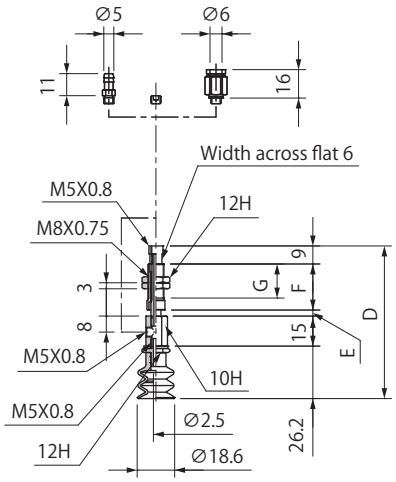

Model number	D	E	F	G	Weight(g)
NAPCT/YS-18-3-□ (-T/O)	76.2	3	23	17	23
NAPCT/YS-18-10-□ (-T/O)	83.2	10			23.5
NAPCT/YS-18-15-□ (-T/O)	95.7	15	30.5	24.5	26

※□ in the table indicates the cup material.
※ The weight value is when NBR（Nitrile rubber）/ without connector selected.

NAPCT/YS-20

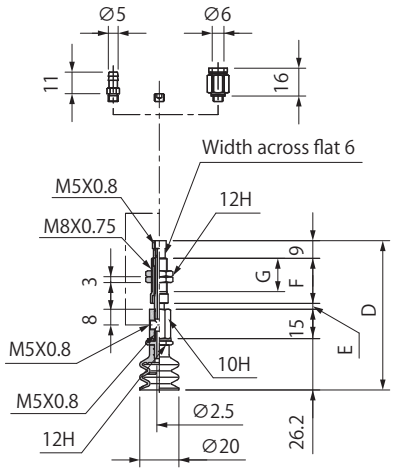

Model number	D	E	F	G	Weight(g)
NAPCT/YS-20-3-□ (-T/O)	76.2	3	23	17	23.5
NAPCT/YS-20-10-□ (-T/O)	83.2	10			24
NAPCT/YS-20-15-□ (-T/O)	95.7	15	30.5	24.5	26.5

※□ in the table indicates the cup material.
※ The weight value is when NBR（Nitrile rubber）/ without connector selected.

NAPCT/YS-30

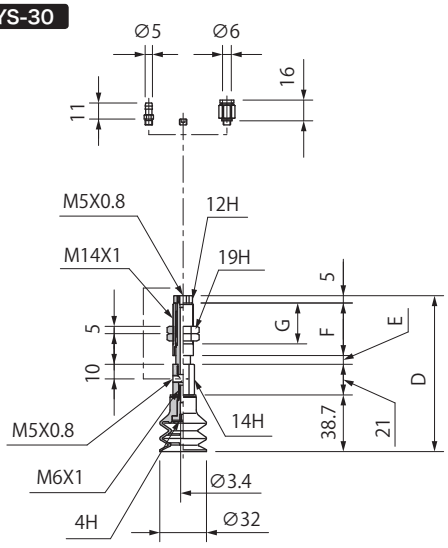

Model number	D	E	F	G	Weight(g)
NAPCT/YS-30-6-□ (-T/O)	106.7	6	36	28	80
NAPCT/YS-30-15-□ (-T/O)	115.7	15			85
NAPCT/YS-30-30-□ (-T/O)	152.7	30	58	50	110

※□ in the table indicates the cup material.
※ The weight value is when NBR（Nitrile rubber）/ without connector selected.

NAPCT/YS-40

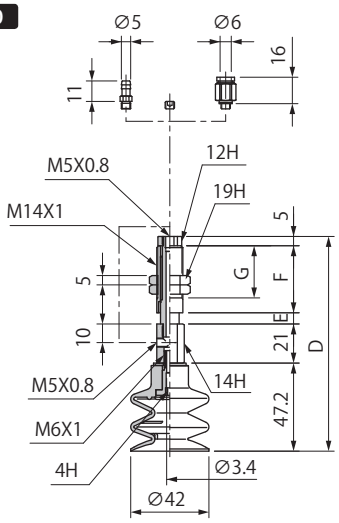

Model number	D	E	F	G	Weight(g)
NAPCT/YS-40-6-□ (-T/O)	115.2	6	36	28	91
NAPCT/YS-40-15-□ (-T/O)	124.2	15			96
NAPCT/YS-40-30-□ (-T/O)	161.2	30	58	50	121

※□ in the table indicates the cup material.
※ The weight value is when NBR（Nitrile rubber）/ without connector selected.

Common Specifications

Connector Weight(g)

Symbol	Tube O.D ϕ 6
T	1.5
O	4.0

NAPCTS·YS Cup with Spring Fitting

NAPCT/YS-60

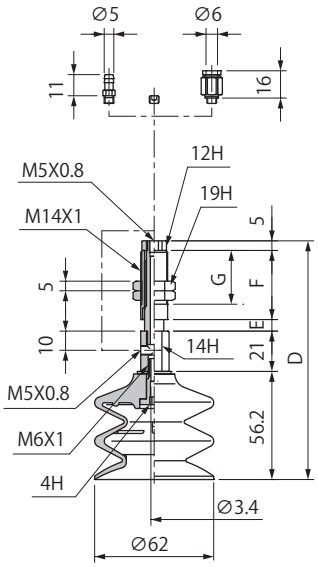

Model number	D	E	F	G	Weight(g)
NAPCT/YS-60-6-□ (-T/O)	124.2	6	36	28	126
NAPCT/YS-60-15-□ (-T/O)	133.2	15			131
NAPCT/YS-60-30-□ (-T/O)	170.2	30	58	50	156

※□ in the table indicates the cup material.
※ The weight value is when NBR（Nitrile rubber）/ without connector selected.

NAPCT/YS-90

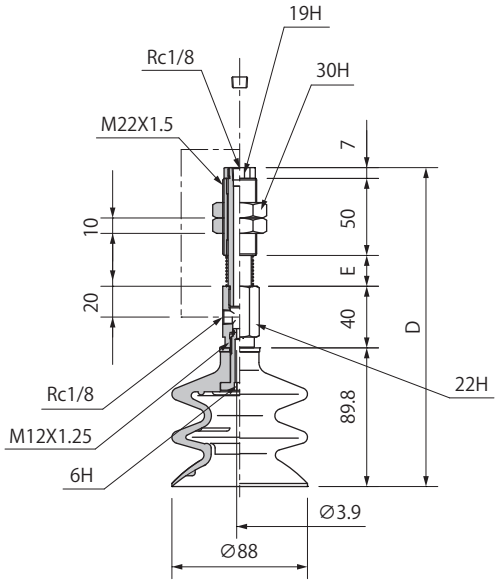

Model number	D	E	Weight(g)
NAPCT/YS-90-10-□	206.8	20	472
NAPCT/YS-90-30-□	236.8	50	506
NAPCT/YS-90-50-□	261.8	75	533

※□ in the table indicates the cup material.
※ The weight value is when NBR（Nitrile rubber）selected.

Common Specifications

Connector Weight(g)

Symbol	Tube O.D ϕ 6
T	1.5
O	4.0

02
Suction Cup
PA
PB
PC
PCD
PD
PF
PFO
PH
PJ
CORE
PK2
PK2B
PK2L
PL
PN
PN-B
PP
PQ
PR
PU
PW
RA
SM
TN

NAPCTH·YH Cup with Non-rotation Spring Fitting

Consisting of fitting, setting screw, suction cup.

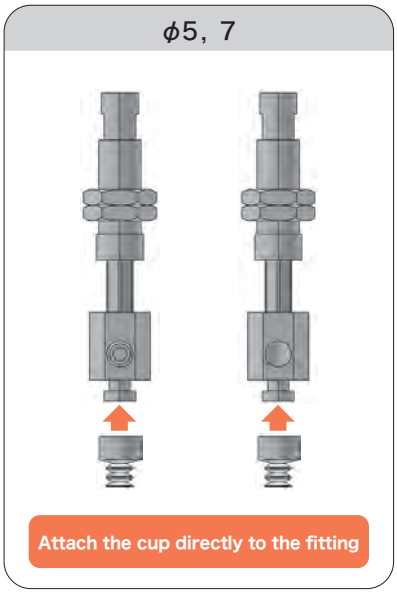

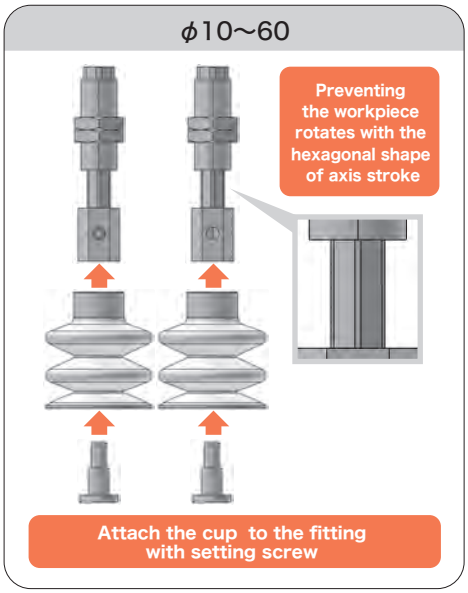

How to Order

NAPC T H – 5 – 3 – N – T

① ② ③ ④

① Vacuum Port

T	Top
Y	Side

② Cup Size - Stroke (mm)

Symbol	Cup size Stroke	Symbol	Cup size Stroke	Symbol	Cup size Stroke
5-3	ϕ5-3	15-3	ϕ15-3	30-6	ϕ30-6
5-10	ϕ5-10	15-10	ϕ15-10	30-15	ϕ30-15
5-15	ϕ5-15	15-15	ϕ15-15	30-30	ϕ30-30
7-3	ϕ7-3	18-3	ϕ18-3	40-6	ϕ40-6
7-10	ϕ7-10	18-10	ϕ18-10	40-15	ϕ40-15
7-15	ϕ7-15	18-15	ϕ18-15	40-30	ϕ40-30
10-3	ϕ10-3	20-3	ϕ20-3	60-6	ϕ60-6
10-10	ϕ10-10	20-10	ϕ20-10	60-15	ϕ60-15
10-15	ϕ10-15	20-15	ϕ20-15	60-30	ϕ60-30

③ Cup Rubber Material

Symbol	Material
N	NBR(Nitrile rubber)
S	Silicone rubber

※ Please consult with us for other material.

④ Connector

Blank	N/A
T	Barb
O	Push-in

Spring Specifications

Cup size	Unit	ϕ5, 7			ϕ10~20			ϕ30~ϕ60		
Stroke	mm	3	10	15	3	10	15	6	15	30
Spring load at 0 stroke	N	0.27		0.29	0.61		0.64	2.45		2.9
Spring load at full stroke	N	0.43	0.82	0.83	0.77	1.17		3.43	4.9	5.88

Combination Table

Model number	Cup	Setting screw	Fitting	Piping specifications		
				Without connector・Blank	Barb connector・T	Push-in connector・O
NAPC○H-5-3-□ (-T/O)	PCG-5-□	Attach the cup directly to the fitting	NAPC○H-5-3-K (-T/O)	M5X0.8 (Female)	ϕ 6X4	
NAPC○H-5-10-□ (-T/O)			NAPC○H-5-10-K (-T/O)			
NAPC○H-5-15-□ (-T/O)			NAPC○H-5-15-K (-T/O)			
NAPC○H-7-3-□ (-T/O)	PCG-7-□		NAPC○H-5-3-K (-T/O)			
NAPC○H-7-10-□ (-T/O)			NAPC○H-5-10-K (-T/O)			
NAPC○H-7-15-□ (-T/O)			NAPC○H-5-15-K (-T/O)			
NAPC○H-10-3-□ (-T/O)	PCG-10-□	TN-PC-10-M5	NAPC○H-10-3-K (-T/O)			
NAPC○H-10-10-□ (-T/O)			NAPC○H-10-10-K (-T/O)			
NAPC○H-10-15-□ (-T/O)			NAPC○H-10-15-K (-T/O)			
NAPC○H-15-3-□ (-T/O)	PCG-15-□		NAPC○H-10-3-K (-T/O)			
NAPC○H-15-10-□ (-T/O)			NAPC○H-10-10-K (-T/O)			
NAPC○H-15-15-□ (-T/O)			NAPC○H-10-15-K (-T/O)			
NAPC○H-18-3-□ (-T/O)	PCG-18-□		NAPC○H-10-3-K (-T/O)			
NAPC○H-18-10-□ (-T/O)			NAPC○H-10-10-K (-T/O)			
NAPC○H-18-15-□ (-T/O)			NAPC○H-10-15-K (-T/O)			
NAPC○H-20-3-□ (-T/O)	PCG-20-□		NAPC○H-10-3-K (-T/O)			
NAPC○H-20-10-□ (-T/O)			NAPC○H-10-10-K (-T/O)			
NAPC○H-20-15-□ (-T/O)			NAPC○H-10-15-K (-T/O)			
NAPC○H-30-6-□ (-T/O)	PCG-30-□	TN-PC-30-M6	NAPF○H-20B-6-K (-T/O)			
NAPC○H-30-15-□ (-T/O)			NAPF○H-20B-15-K (-T/O)			
NAPC○H-30-30-□ (-T/O)			NAPF○H-20B-30-K (-T/O)			
NAPC○H-40-6-□ (-T/O)	PCG-40-□		NAPF○H-20B-6-K (-T/O)			
NAPC○H-40-15-□ (-T/O)			NAPF○H-20B-15-K (-T/O)			
NAPC○H-40-30-□ (-T/O)			NAPF○H-20B-30-K (-T/O)			
NAPC○H-60-6-□ (-T/O)	PCG-60-□		NAPF○H-20B-6-K (-T/O)			
NAPC○H-60-15-□ (-T/O)			NAPF○H-20B-15-K (-T/O)			
NAPC○H-60-30-□ (-T/O)			NAPF○H-20B-30-K (-T/O)			

※□ in the table indicates the cup material.
※○ in the table indicates the vacuum port (T or Y).

NAPCTH·YH Cup with Non-rotation Spring Fitting

Dimensions

(mm)

NAPCT/YH-5

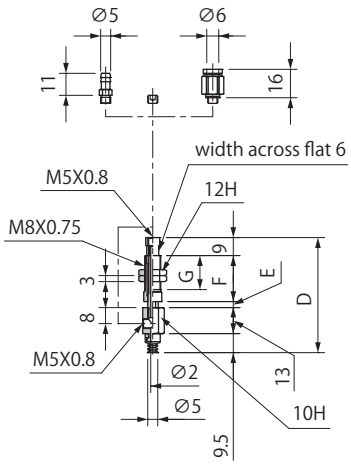

Model number	D	E	F	G	Weight (g)
NAPCT/YH-5-3-□ (-T/O)	57.5	3	23	17	21
NAPCT/YH-5-10-□ (-T/O)	64.5	10			21.5
NAPCT/YH-5-15-□ (-T/O)	77	15	30.5	24.5	24.5

※□ in the table indicates the cup material.
※ The weight value is when NBR (Nitrile rubber) / without connector selected.

NAPCT/YH-7

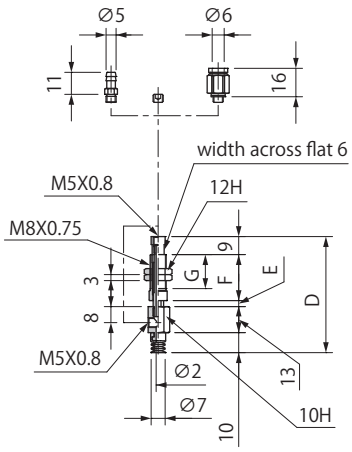

Model number	D	E	F	G	Weight (g)
NAPCT/YH-7-3-□ (-T/O)	58	3	23	17	21
NAPCT/YH-7-10-□ (-T/O)	65	10			21.5
NAPCT/YH-7-15-□ (-T/O)	77.5	15	30.5	24.5	24.5

※□ in the table indicates the cup material.
※ The weight value is when NBR (Nitrile rubber) / without connector selected.

NAPCT/YH-10

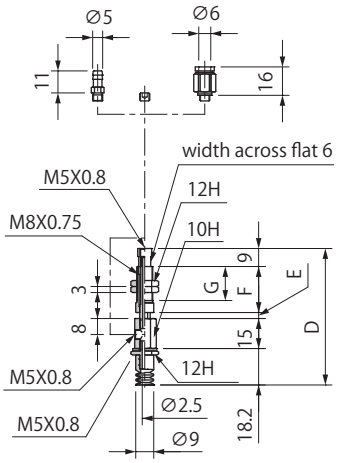

Model number	D	E	F	G	Weight (g)
NAPCT/YH-10-3-□ (-T/O)	68.2	3	23	17	22.5
NAPCT/YH-10-10-□ (-T/O)	75.2	10			23
NAPCT/YH-10-15-□ (-T/O)	87.7	15	30.5	24.5	26

※□ in the table indicates the cup material.
※ The weight value is when NBR (Nitrile rubber) / without connector selected.

NAPCT/YH-15

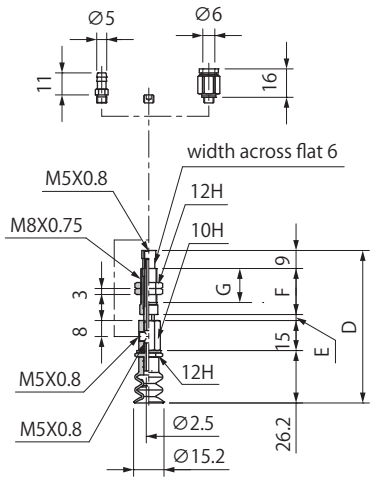

Model number	D	E	F	G	Weight (g)
NAPCT/YH-15-3-□ (-T/O)	76.2	3	23	17	23.5
NAPCT/YH-15-10-□ (-T/O)	83.2	10			24
NAPCT/YH-15-15-□ (-T/O)	95.7	15	30.5	24.5	27

※□ in the table indicates the cup material.
※ The weight value is when NBR (Nitrile rubber) / without connector selected.

Common Specifications

Connector Weight(g)

Symbol	Tube O.D ϕ 6
T	1.5
O	4.0

Dimensions

(mm)

NAPCT/YH-18

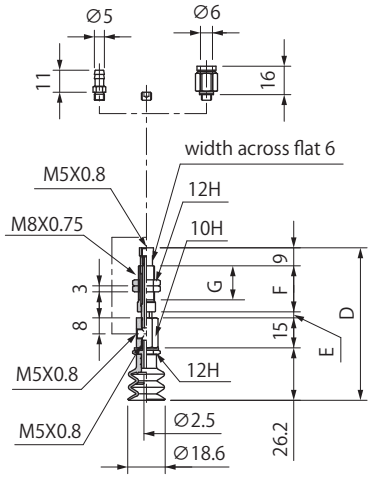

Model number	D	E	F	G	Weight (g)
NAPCT/YH-18-3-□ (-T/O)	76.2	3	23	17	23.5
NAPCT/YH-18-10-□ (-T/O)	83.2	10			24
NAPCT/YH-18-15-□ (-T/O)	95.7	15	30.5	24.5	27

※□ in the table indicates the cup material.
※ The weight value is when NBR（Nitrile rubber）/ without connector selected.

NAPCT/YH-20

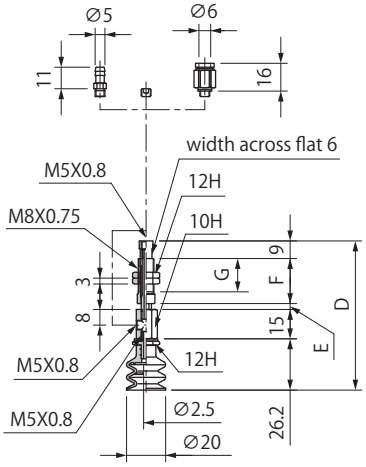

Model number	D	E	F	G	Weight (g)
NAPCT/YH-20-3-□ (-T/O)	76.2	3	23	17	24
NAPCT/YH-20-10-□ (-T/O)	83.2	10			24.5
NAPCT/YH-20-15-□ (-T/O)	95.7	15	30.5	24.5	27.5

※□ in the table indicates the cup material.
※ The weight value is when NBR（Nitrile rubber）/ without connector selected.

NAPCT/YH-30

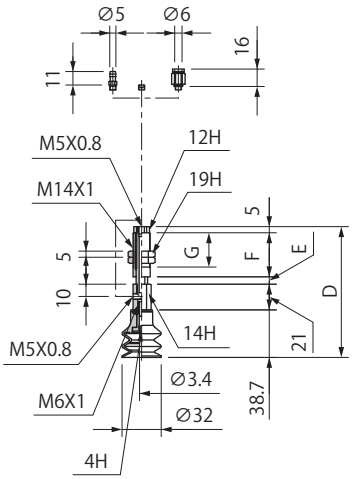

Model number	D	E	F	G	Weight (g)
NAPCT/YH-30-6-□ (-T/O)	106.7	6	36	28	78
NAPCT/YH-30-15-□ (-T/O)	115.7	15			83
NAPCT/YH-30-30-□ (-T/O)	152.7	30	58	50	107

※□ in the table indicates the cup material.
※ The weight value is when NBR（Nitrile rubber）/ without connector selected.

NAPCT/YH-40

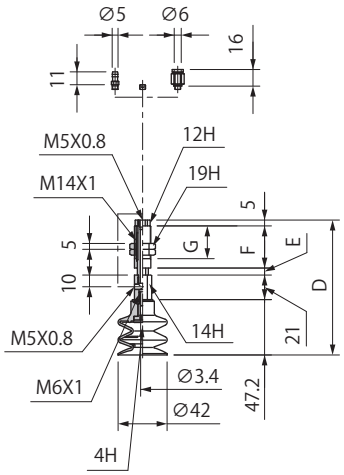

Model number	D	E	F	G	Weight (g)
NAPCT/YH-40-6-□ (-T/O)	115.2	6	36	28	89
NAPCT/YH-40-15-□ (-T/O)	124.2	15			94
NAPCT/YH-40-30-□ (-T/O)	161.2	30	58	50	118

※□ in the table indicates the cup material.
※ The weight value is when NBR（Nitrile rubber）/ without connector selected.

Common Specifications

Connector Weight(g)

Symbol	Tube O.D ϕ 6
T	1.5
O	4.0

NAPCTH·YH Cup with Non-rotation Spring Fitting

NAPCT/YH-60

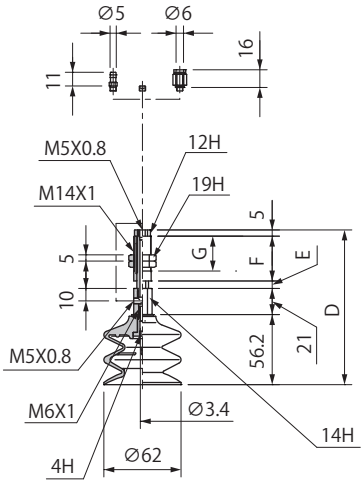

Model number	D	E	F	G	Weight(g)
NAPCT/YH-60-6- □ (-T/O)	124.2	6	36	28	124
NAPCT/YH-60-15- □ (-T/O)	133.2	15			129
NAPCT/YH-60-30- □ (-T/O)	170.2	30	58	50	153

※□ in the table indicates the cup material.
※ The weight value is when NBR（Nitrile rubber）/ without connector selected.

Common Specifications

Connector Weight(g)

Symbol	Tube O.D ϕ 6
T	1.5
O	4.0

02 Suction Cup
PA
PB
PC
PCD
PD
PF
PFO
PH
PJ
CORE
PK2
PK2B
PK2L
PL
PN
PN-B
PP
PQ
PR
PU
PW
RA
SM
TN

PCD Series

Ring Cup

RoHS

Suction cup whose suction surface is ring-shaped.
For workpieces that are ring-shaped such as CD and DVD discs!

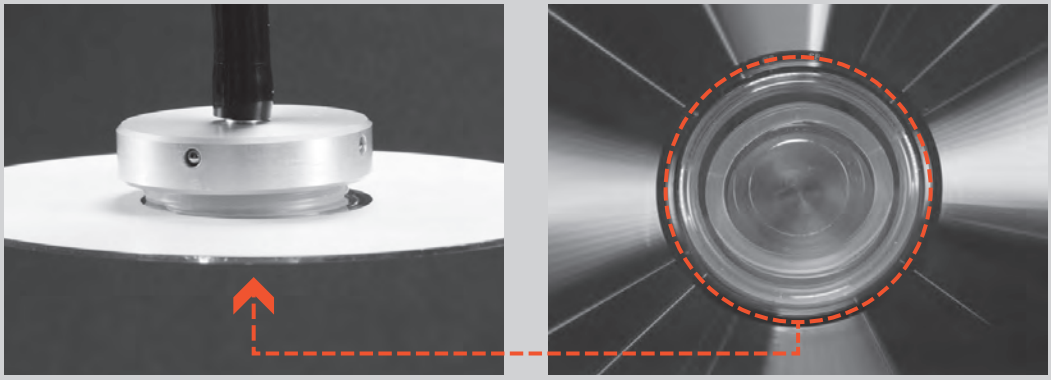

CD　　Viewed from below

Wide range of cup sizes.

I.D	ϕ19	ϕ20	ϕ23	ϕ29.5	ϕ34	ϕ38	ϕ46

Suction Cup

PCD・PCDJ	Cup I.D (mm) ϕ19～46		P.253

Fitting

Type	Applicable cup I.D (mm)	Cup type	Vacuum port	Piping・Connector	Page
Cup with fixed fitting PCDM	ϕ 20～46	Flat	Top	Male screw	P.255
Cup with fixed fitting PCDF	ϕ 20～38	Flat	Side	Female screw	P.255
Cup with fixed fitting PCDJM	ϕ 19, 23	Bellows	Top	Male screw	P.255
Cup with fixed fitting PCDJF	ϕ 19, 23	Bellows	Side	Female screw	P.255

Suction Cup Selection Guide ••→ P.163

How to Order

(Flat Type)

PCD – 20 – N

① ②

① Cup・Ring I.D (mm)

Symbol	Ring I.D
20	φ20
23	φ23
29.5	φ29.5
34	φ34
38	φ38
46	φ46

② Cup Rubber Material

Symbol	Material
N	NBR (Nitrile rubber)
S	Silicone rubber

※ Please consult with us for other material.

(Bellows Type)

PCDJ – 20 – N

① ②

① Cup・Ring I.D (mm)

Symbol	Ring I.D
20	φ19
23	φ23

② Cup Rubber Material

Symbol	Material
N	NBR(Nitrile rubber)
S Note1	Silicone rubber

Note 1) PCDJ-20 is only available with silicone material.
※ Please consult with us for other material.

Cup Rubber Material Standard Specifications

Symbol	Material	Hardness (A/s)	Ambient temperature (℃)	Color
N	NBR(Nitrile rubber)	55	-26～120	Black
S	Silicone rubber	55	-60～250	Translucent white

Applicable Rubber Material Table

Material	Color	Symbol	PCD						PCDJ	
			20	23	29.5	34	38	46	20	23
NBR(Nitrile rubber)	Black	N	○	○	○	○	○	○	×	○
Silicone rubber	Translucent white	S	○	○	○	○	○	○	○	○

●: In stock ○Made to order ×: None
※Please consult with us for other material.

Dimensions (Flat Type)

(mm)

PCD-20

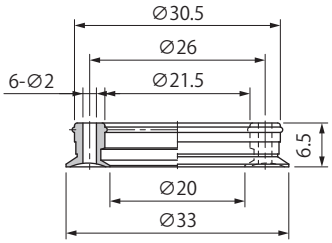

PCD-23

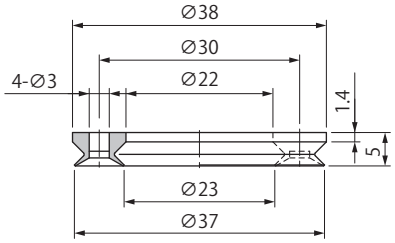

PCD-29.5

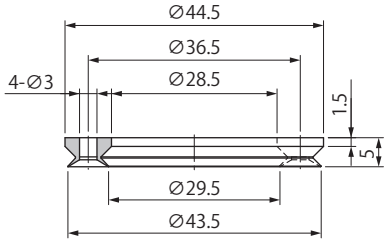

PCD-34

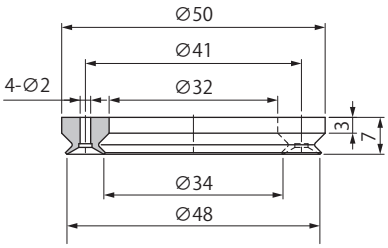

PCD-38

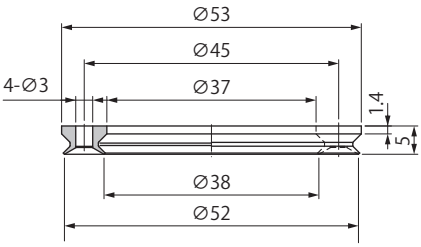

PCD-46

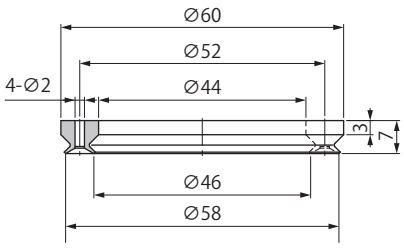

Dimensions (Bellows Type)

(mm)

PCDJ-20

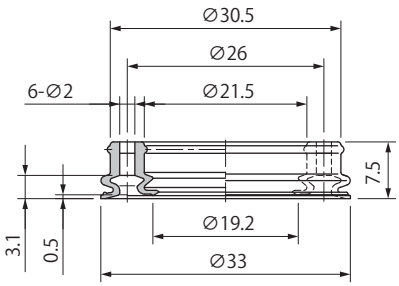

PCDJ-23

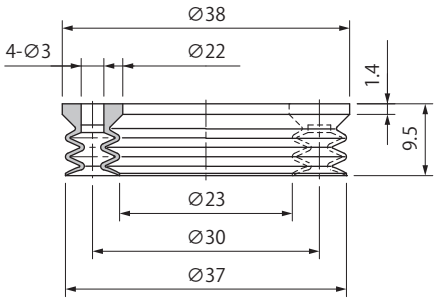

Weight

(Flat Type) (g)

Model ＼ Material	N	S
PCD-20	2.5	2.5
PCD-23	2.8	2.8
PCD-29.5	3.5	3.5
PCD-34	6.6	6.6
PCD-38	3.6	3.6
PCD-46	8.0	8.0

(Bellows Type) (g)

Model ＼ Material	N	S
PCDJ-20	-	2.1
PCDJ-23	3.8	3.7

Symbol	Material
N	NBR(Nitrile rubber)
S	Silicone rubber

PCD·PCDJM·F Cup with Fixed Fitting

How to Order

(Flat Type)

PCD M – 20 – N
① ② ③

① Screw Type

M	Male screw
F	Female screw

② Cup・Ring I.D (mm)

Symbol	Ring I.D
20	Φ20
23	ϕ23
29.5	ϕ29.5
34	ϕ34
38	ϕ38
46	ϕ46

※ PCDF-46 is unavailable.

③ Cup Rubber Material

Symbol	Material
N	NBR(Nitrile rubber)
S	Silicone rubber

※ Please consult with us for other material.

(Bellows Type)

PCDJ M – 20 – N
① ② ③

① Screw Type

M	Male screw
F	Female screw

② Cup・Ring I.D (mm)

Symbol	Ring I.D
20	ϕ19
23	ϕ23

③ Cup Rubber Material

Symbol	Material
N	NBR(Nitrile rubber)
S[Note1]	Silicone rubber

Note 1) PCDJ-20 is only available with silicone material.
※ Please consult with us for other material.

Combination Table

Male Screw

Model number	Cup	Setting screw	Fitting	Piping specifications
PCDM-20-□	PCD-20-□	Attach the cup directly to the fitting	CDM-20	M8X1.25 (Male)
PCDM-23-□	PCD-23-□		CDM-23	
PCDM-29.5-□	PCD-29.5-□		CDM-29.5	
PCDM-34-□	PCD-34-□		CDM-34	
PCDM-38-□	PCD-38-□		CDM-38	
PCDM-46-□	PCD-46-□		CDM-46	
PCDJM-20-□	PCDJ-20-□		CDM-20	
PCDJM-23-□	PCDJ-23-□		CDM-23	

※□ in the table indicates the cup material.

Female Screw

Model number	Cup	Setting screw	Fitting	Piping specifications
PCDF-20-□	PCD-20-□	Attach the cup directly to the fitting	CDF-20	M5X0.8 (Female)
PCDF-23-□	PCD-23-□		CDF-23	
PCDF-29.5-□	PCD-29.5-□		CDF-29.5	
PCDF-34-□	PCD-34-□		CDF-34	
PCDF-38-□	PCD-38-□		CDF-38	
PCDJF-20-□	PCDJ-20-□		CDF-20	
PCDJF-23-□	PCDJ-23-□		CDF-23	

※□ in the table indicates the cup material.

Dimensions

(mm)

Male Screw

PCDM / PCDJM-20

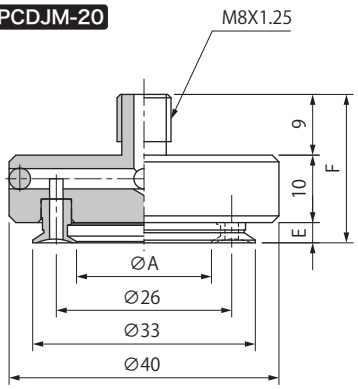

Model number	A	E	F	Weight (g)
PCDM-20- □	20	3	22	28.0
PCDJM-20- □	19	4	23	27.9

※□ in the table indicates the cup material.
※ The weight value is when NBR (Nitrile rubber) selected.

PCDM / PCDJM-23

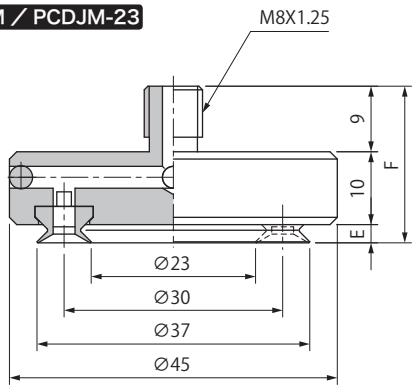

Model number	E	F	Weight (g)
PCDM-23- □	2.5	21.5	35.3
PCDJM-23- □	7	26	35.4

※□ in the table indicates the cup material.
※ The weight value is when NBR (Nitrile rubber) selected.

PCDM-29.5

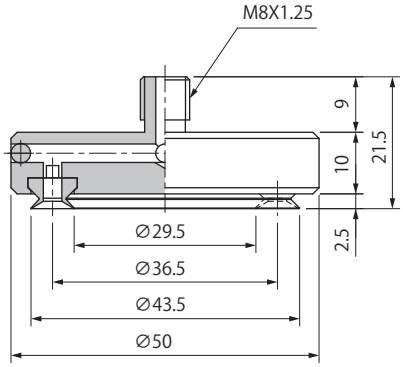

Model number	Weight (g)
PCDM-29.5- □	43.3

※□ in the table indicates the cup material.
※ The weight value is when NBR (Nitrile rubber) selected.

PCDM-34

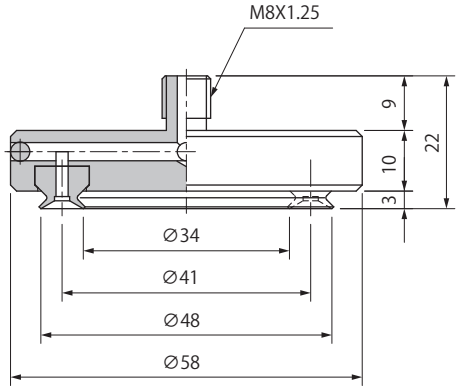

Model number	Weight (g)
PCDM-34- □	54.2

※□ in the table indicates the cup material.
※ The weight value is when NBR (Nitrile rubber) selected.

PCDM-38

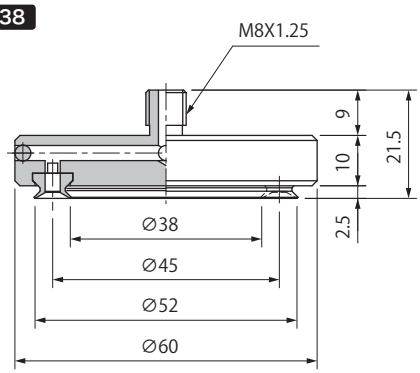

Model number	Weight (g)
PCDM-38- □	64.4

※□ in the table indicates the cup material.
※ The weight value is when NBR (Nitrile rubber) selected.

PCDM-46

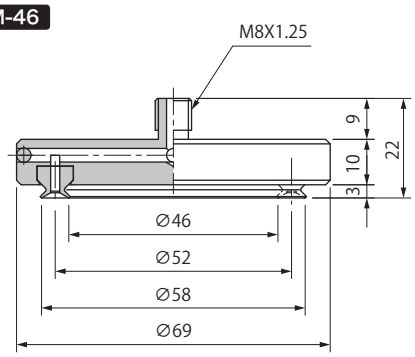

Model number	Weight (g)
PCDM-46- □	81.2

※□ in the table indicates the cup material.
※ The weight value is when NBR (Nitrile rubber) selected.

PCD•PCDJM•F Cup with Fixed Fitting

Dimensions

(mm)

Female Screw

PCDF / PCDJF-20

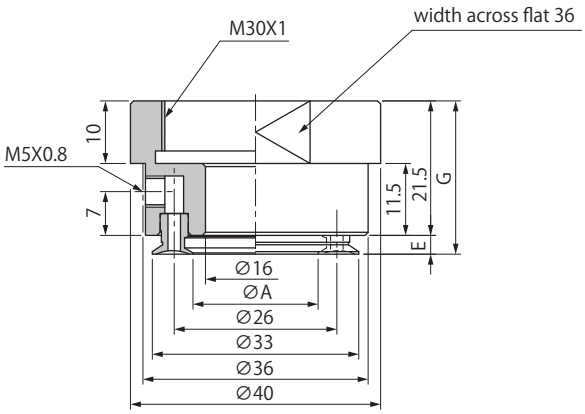

Model number	A	E	G	Weight (g)
PCDF-20- □	20	3	24.5	30.2
PCDJF-20- □	19	4	25.5	

※□ in the table indicates the cup material.
※ The weight value is when NBR (Nitrile rubber) selected.

PCDF / PCDJF-23

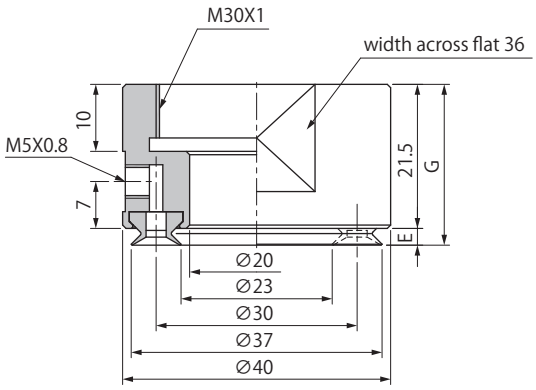

Model number	E	G	Weight (g)
PCDF-23- □	2.5	24	32.6
PCDJF-23- □	7	28.5	31.2

※□ in the table indicates the cup material.
※ The weight value is when NBR (Nitrile rubber) selected.

PCDF-29.5

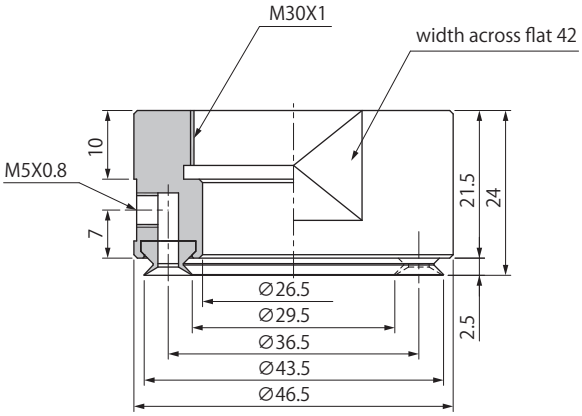

PCDF-34

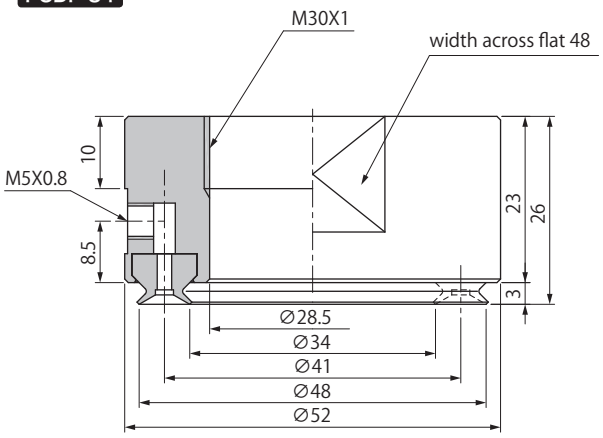

PCDF-38

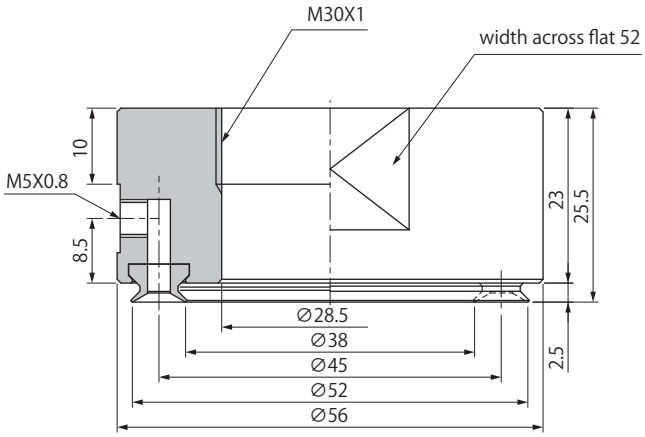

Model number	Weight (g)
PCDF-29.5- □	-
PCDF-34- □	-
PCDF-38- □	90.7

※□ in the table indicates the cup material.
※ The weight value is when NBR (Nitrile rubber) selected.

02
Suction Cup
PA
PB
PC
PCD
PD
PF
PFO
PH
PJ
CORE
PK2
PK2B
PK2L
PL
PN
PN-B
PP
PQ
PR
PU
PW
RA
SM
TN

PD Series

Foam Cup

RoHS

Suction cup made of foam (sponge).
For uneven workpieces with surfaces such as those of block tiles!

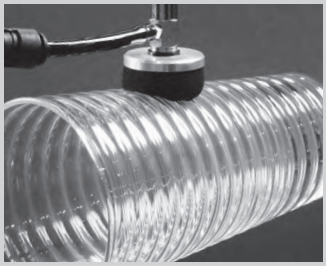

Cup

Tin bucket

Bumpy glass

Wide range of cup sizes.

ϕ4	ϕ6.5	ϕ8	ϕ9.5	ϕ12	ϕ15	ϕ20	ϕ30	ϕ40	ϕ50	ϕ60	ϕ70	ϕ80	ϕ100

Various fittings for many kinds of applications.

Fixed fitting

Spring fitting

Compact type fitting

Suction Cup

PDG	Cup size (mm) ϕ4 ~ 100		P.261

Fitting

Type	Applicable cup size (mm)	Stroke (mm)	Vacuum port	Piping・Connector	Page
Cup with compact fixed fitting PDTM	ϕ 4 ~ 15	N/A	Top	Male screw	P.265
Cup with fixed fitting PDTK	ϕ 20 ~ 50	N/A	Top	Barb	P.267
	ϕ 60 ~ 100			Female screw	
Cup with fixed fitting PDYK	ϕ 20 ~ 50	N/A	Side	Barb	P.267
	ϕ 60 ~ 100			Female screw	
Cup with spring fitting NAPDTS	ϕ 20 ~ 50	6, 15, 30	Top	Female screw Push-in Barb	P.271
	ϕ 60 ~ 100	10, 30, 50		Female screw	
Cup with spring fitting NAPDYS	ϕ 20 ~ 50	6, 15, 30	Side	Female screw Push-in Barb	P.271
	ϕ 60 ~ 100	10, 30, 50		Female screw	
Cup with non-rotation spring fitting NAPDTH	ϕ 20 ~ 50	6, 15, 30	Top	Female screw Push-in Barb	P.275
Cup with non-rotation spring fitting NAPDYH	ϕ 20 ~ 50	6, 15, 30	Side	Female screw Push-in Barb	P.275
Setting screw	ϕ 20 ~ 50	—	—	—	P.503
Holder	ϕ 20 ~ 100	—	—	—	P.263

Suction Cup Selection Guide ••→ P.163

PDG Foam Cup

How to Order

PDG – 4 – CR-E

① ②

① Cup Size (mm)

Symbol	Cup size	Symbol	Cup size
4	φ4	30	φ30
6.5	φ6.5	40	φ40
8	φ8	50	φ50
9.5	φ9.5	60	φ60
12	φ12	70	φ70
15	φ15	80	φ80
20	φ20	100	φ100

② Cup Rubber Material

Symbol	Material
Blank	CR (Chloroprene) Note1
CR-E	Conductive chloroprene Note 2

Note1) φ 20～100 only.
Note2) φ 4～15 only.
※ Please consult with us for other material.

Cup Rubber Material Standard Specifications

Symbol	Material	Hardness (A/s)	Ambient temperature (℃)	Color	Volume resistivity Note1.2
CR	Chloroprene	15	-30～130	Black	-
CR-E	Conductive chloroprene	20	-30～110	Black	10^4 Ω・㎝

Note1) Volume resistivity shows conductivity, resistance value is per cm^3.
Note2) It is the measured value of in our designated test piece.

Applicable Rubber Material Table

Material	Color	Symbol	Round type													
			4	6.5	8	9.5	12	15	20	30	40	50	60	70	80	100
Chloroprene	Black	CR	×	×	×	×	×	×	●	●	●	●	●	●	●	●
Conductive chloroprene	Black	CR-E	●	●	●	●	●	●	×	×	×	×	×	×	×	×

●: In stock ○Made to order ×: None
※Please consult with us for other material.

Dimensions

(mm)

PDG-4

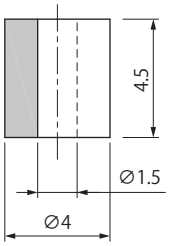

PDG-6.5

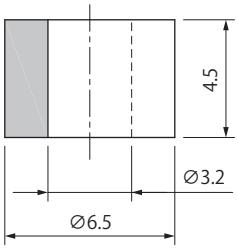

PDG-8

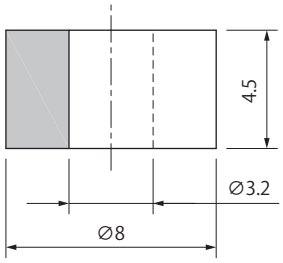

PDG-9.5

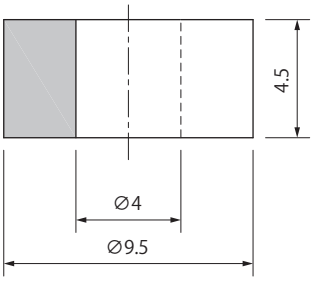

PDG-12

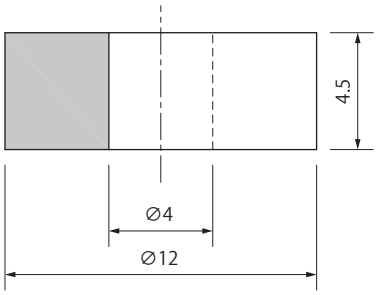

PDG-15

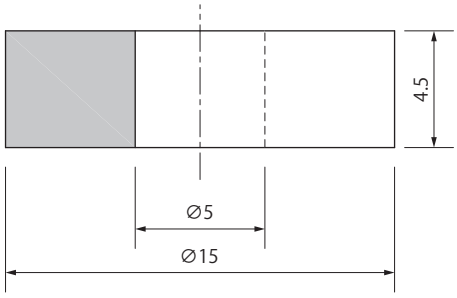

Weight

(g)

Model ＼ Material	CR-E
PDG-4	0.1
PDG-6.5	0.1
PDG-8	0.1
PDG-9.5	0.1
PDG-12	0.2
PDG-15	0.3

PDG Foam Cup

Dimensions

(mm)

PDG-20

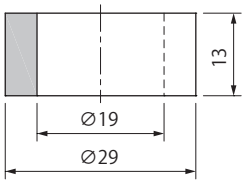

PDG-30

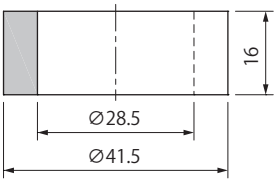

PDG-40

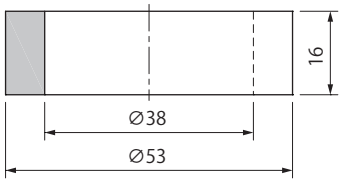

PDG-50

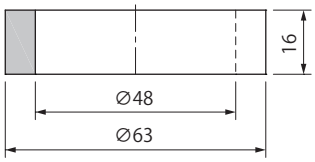

PDG-60

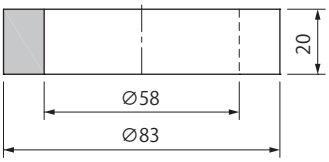

PDG-70

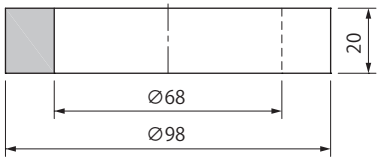

PDG-80

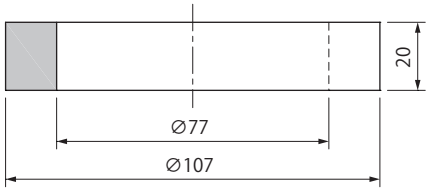

PDG-100

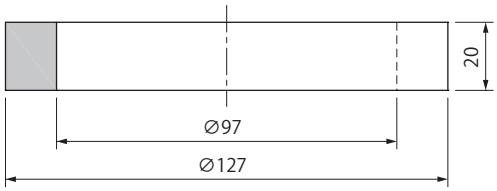

Weight

(g)

Model ＼ Material	CR	Applicable setting screw (Screw specifications)	Applicable holder
PDG-20	1.1	TN-PF-20-M5 (Male M5×0.8)	PDH-20-M5
PDG-20		TN-PF-25-M6 (Male M6×1.0)	PDH-20-M6
PDG-30	2.7	TN-PF-25-M6 (Male M6×1.0)	PDH-30
PDG-40	3.9		PDH-40
PDG-50	4.8	TN-PF-50-M6 (Male M6×1.0)	PDH-50
PDG-50		TN-PF-50-M8 (Male M8×1.25)	
PDG-60	12.3	-	PDH-60
PDG-70	18.3		PDH-70
PDG-80	19.8		PDH-80
PDG-100	24.4		PDH-100

※Please refer to P.503 for setting screw detailed specifications.

Dimensions（Holder）

(mm)

PDH-20-M5

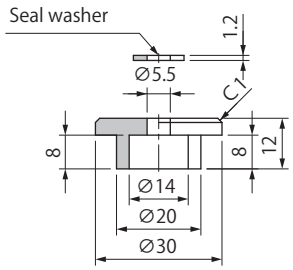

PDH-20-M6

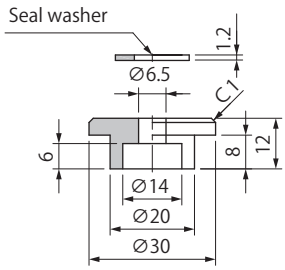

PDH-30

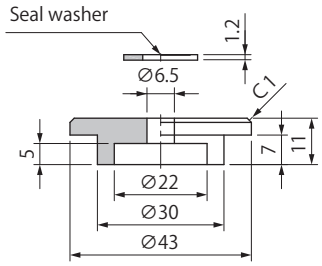

PDH-40

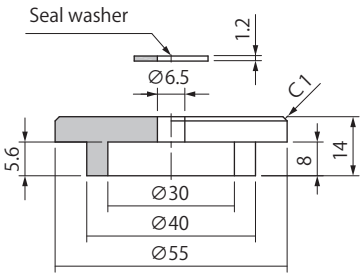

PDH-50

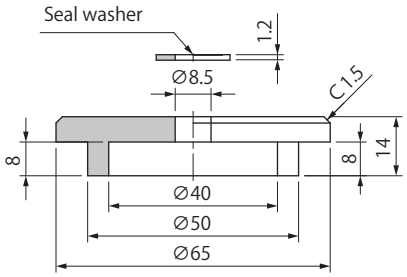

PDH-60

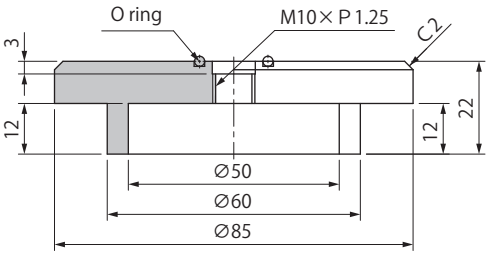

PDH-70

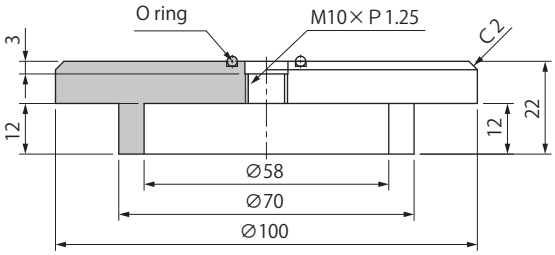

PDH-80

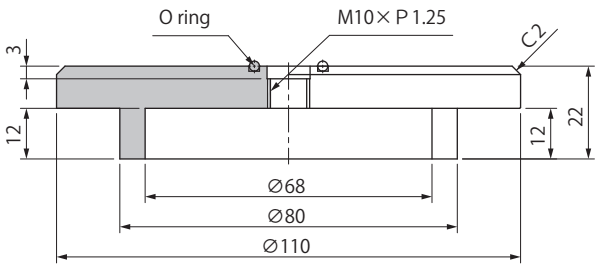

PDH-100

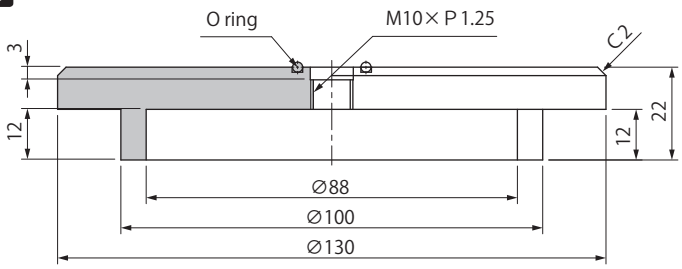

PDTM Cup with Compact Fixed Fitting

Simple constitution of the cup and the fitting.

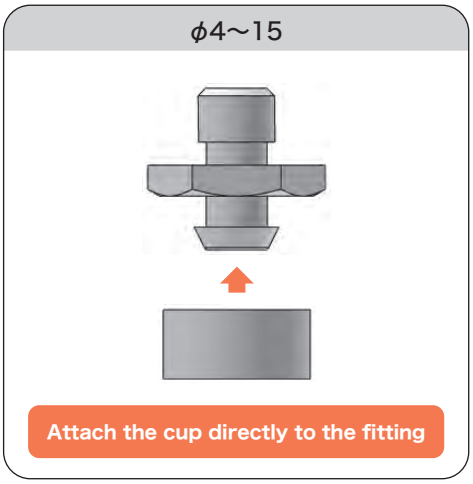

How to Order

PDTM – 4 – CR-E – M5M

① ② ③

① Cup Size (mm)

Symbol	Cup size
4	ϕ4
6.5	ϕ6.5
8	ϕ8
9.5	ϕ9.5
12	ϕ12
15	ϕ15

② Cup Rubber Material

Symbol	Material
CR-E	Conductive chloroprene

※ Please consult with us for other material.

③ Screw Type

M5M	M5
10-32M	10/32M

※If ① is 4, only M5M screw available.

Combination Table

Model number	Cup	Fitting	Screw type
PDTM-4-CR-E-M5M	PDG-4-CR-E	DTM-4-M5M	M5
PDTM-6.5-CR-E-M5M	PDG-6.5-CR-E	DTM-6.5-M5M	
PDTM-8-CR-E-M5M	PDG-8-CR-E		
PDTM-9.5-CR-E-M5M	PDG-9.5-CR-E	DTM-9.5-M5M	
PDTM-12-CR-E-M5M	PDG-12-CR-E	DTM-12-M5M	
PDTM-15-CR-E-M5M	PDG-15-CR-E	DTM-15-M5M	
PDTM-6.5-CR-E-10-32M	PDG-6.5-CR-E	DTM-6.5-10-32M	10/32-18UNC
PDTM-8-CR-E-10-32M	PDG-8-CR-E		
PDTM-9.5-CR-E-10-32M	PDG-9.5-CR-E	DTM-9.5-10-32M	
PDTM-12-CR-E-10-32M	PDG-12-CR-E		
PDTM-15-CR-E-10-32M	PDG-15-CR-E	DTM-15-10-32M	

Dimensions

(mm)

PDTM

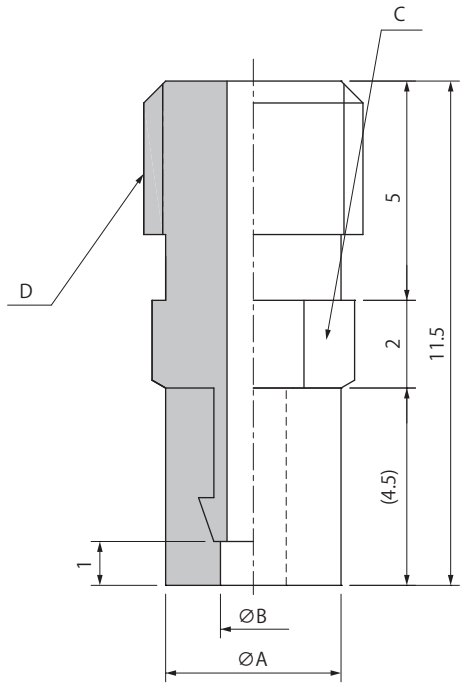

Model number	A	B	Width across flat C	D	Weight (g)
PDTM-4-CR-E-M5M	4	1.5	4	M5	0.8
PDTM-6.5-CR-E-M5M	6.5	3.2	8		1.4
PDTM-6.5-CR-E-10-32M			12	10/32-18UNC	2.6
PDTM-8-CR-E-M5M	8		8	M5	1.5
PDTM-8-CR-E-10-32M			12	10/32-18UNC	2.6
PDTM-9.5-CR-E-M5M	9.5	4	10	M5	2.1
PDTM-9.5-CR-E-10-32M			12	10/32-18UNC	2.8
PDTM-12-CR-E-M5M	12			M5	2.7
PDTM-12-CR-E-10-32M				10/32-18UNC	3.9
PDTM-15-CR-E-M5M	15	5	15	M5	4.1
PDTM-15-CR-E-10-32M				10/32-18UNC	5.2

PDTK•YK Cup with Fixed Fitting

Consisting of fitting, setting screw, holder,suction cup.

ϕ20~50

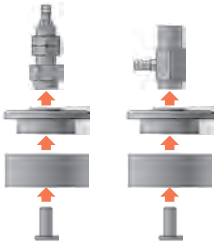

Attach the cup to the holder with double-sided tape, and attach the holder to the fitting with setting screw

ϕ60~100

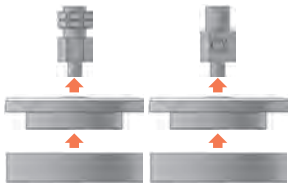

Attach the cup to the holder with double-sided tape, and screw the fitting directly into the holder

How to Order

PD T K – 20

① ②

① Vacuum Port

T	Top
Y	Side

② Cup Size (mm)

Symbol	Cup size	Symbol	Cup size
20	ϕ20	60	ϕ60
30	ϕ30	70	ϕ70
40	ϕ40	80	ϕ80
50	ϕ50	100	ϕ100

Combination Table

Top Port

Model number	Cup	Setting screw	Fitting	Holder	Piping specifications	
PDTK-20	PDG-20	TN-PF-20-M5	PFTK-15-K	PDH-20-M5	Barb	Φ 6X4
PDTK-30	PDG-30	TN-PF-25-M6	PFTK-25-K	PDH-30		
PDTK-40	PDG-40			PDH-40		
PDTK-50	PDG-50	TN-PF-50-M8	PFTK-50-K	PDH-50		
PDTK-60	PDG-60	Screw the fitting directly into the holder	PFTK-60-K	PDH-60	Rc1/8 (Female)	
PDTK-70	PDG-70			PDH-70		
PDTK-80	PDG-80			PDH-80		
PDTK-100	PDG-100			PDH-100		

Side Port

Model number	Cup	Setting screw	Fitting	Holder	Piping specifications	
PDYK-20	PDG-20	TN-PF-20-M5	PFYK-15-K	PDH-20-M5	Barb	Φ 6X4
PDYK-30	PDG-30	TN-PF-25-M6	PFYK-25-K	PDH-30		
PDYK-40	PDG-40			PDH-40		
PDYK-50	PDG-50	TN-PF-50-M8	PFYK-50-K	PDH-50		
PDYK-60	PDG-60	Screw the fitting directly into the holder	PFYK-60-K	PDH-60	Rc1/8 (Female)	
PDYK-70	PDG-70			PDH-70		
PDYK-80	PDG-80			PDH-80		
PDYK-100	PDG-100			PDH-100		

PDTK•YK Cup with Fixed Fitting

Dimensions

(mm)

Top Port PDTK-20

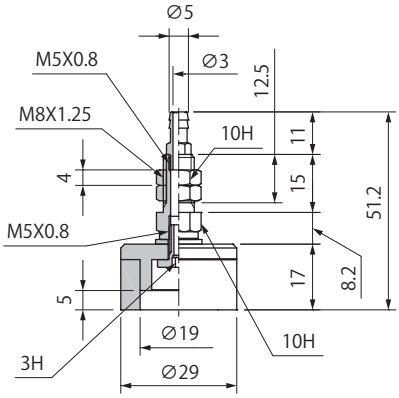

Model number	Weight (g)
PDTK-20	35

Top Port PDTK-30/40/50

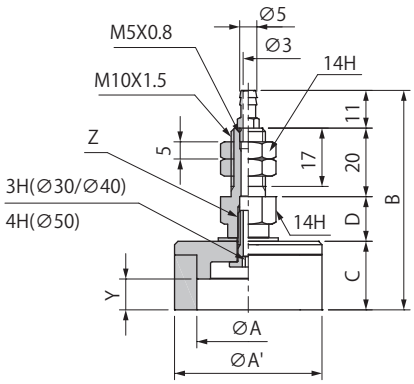

Model number	A	A'	B	C	D	Y	Z	Weight (g)
PDTK-30	28.5	41.5	64.2	20	13.2	9	M6X1.0	63
PDTK-40	38	53	66.2	22		8		90
PDTK-50	48	63	67		14		M8X1.25	120

Top Port PDTK-60/70/80/100

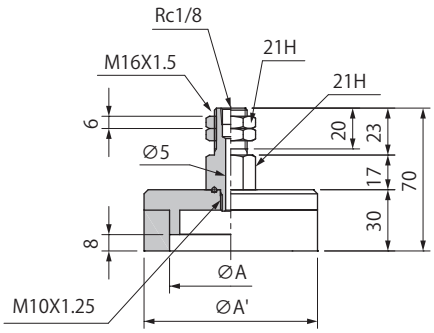

Model number	A	A'	Weight (g)
PDTK-60	58	83	290
PDTK-70	68	98	365
PDTK-80	77	107	415
PDTK-100	97	127	540

Dimensions

(mm)

Side Port PDYK-20

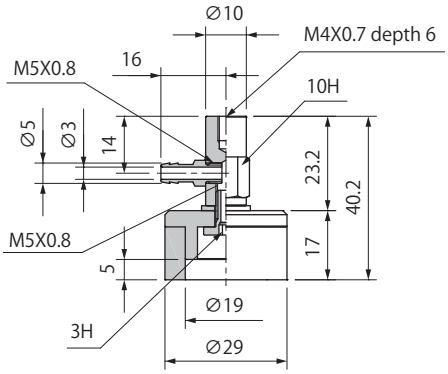

Model number	Weight (g)
PDYK-20	35

Side Port PDYK-30/40/50

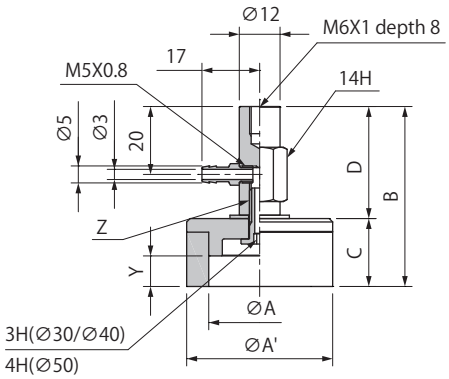

Model number	A	A'	B	C	D	Y	Z	Weight (g)
PDYK-30	28.5	41.5	53.2	20	33.2	9	M6X1.0	63
PDYK-40	38	53	55.2	22		8		90
PDYK-50	48	63	56		34		M8X1.25	125

Side Port PDYK-60/70/80/100

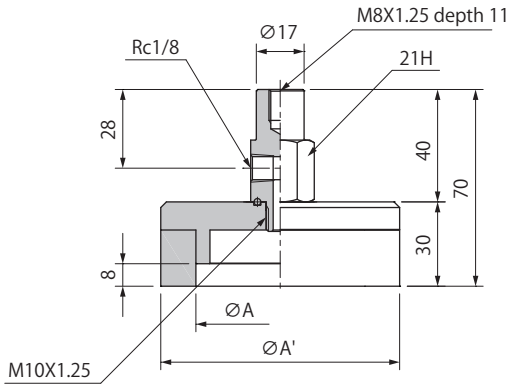

Model number	A	A'	Weight (g)
PDYK-60	58	83	280
PDYK-70	68	98	355
PDYK-80	77	107	405
PDYK-100	97	127	530

NAPDTS·YS Cup with Spring Fitting

Consisting of fitting, setting screw, holder,suction cup.

ϕ20~50

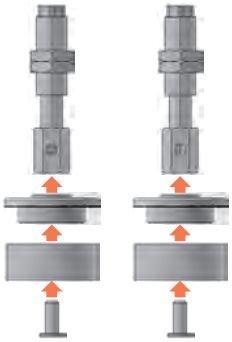

Attach the cup to the holder with double-sided tape, and attach the holder to the fitting with setting screw

ϕ60~100

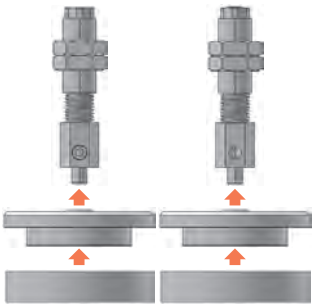

Attach the cup to the holder with double-sided tape, and screw the fitting directly into the holder

How to Order

NAPD T S – 20-6 – T

① ② ③

① Vacuum Port

T	Top
Y	Side

② Cup Size - Stroke (mm)

Symbol	Cup size Stroke	Symbol	Cup size Stroke
20-6	ϕ20-6	60-10	ϕ60-10
20-15	ϕ20-15	60-30	ϕ60-30
20-30	ϕ20-30	60-50	ϕ60-50
30-6	ϕ30-6	70-10	ϕ70-10
30-15	ϕ30-15	70-30	ϕ70-30
30-30	ϕ30-30	70-50	ϕ70-50
40-6	ϕ40-6	80-10	ϕ80-10
40-15	ϕ40-15	80-30	ϕ80-30
40-30	ϕ40-30	80-50	ϕ80-50
50-6	ϕ50-6	100-10	ϕ100-10
50-15	ϕ50-15	100-30	ϕ100-30
50-30	ϕ50-30	100-50	ϕ100-50

③ Connector

Blank	N/A
T	Barb
O	Push-in

注) ϕ60 or more can not be selected "T" and "O"

Spring Specifications

Cup size	Unit	ϕ20~50			ϕ60~100		
Stroke	mm	6	15	30	10	30	50
Spring load at 0 stroke	N	2.45		2.9	8.82	6.76	8.33
Spring load at full stroke	N	3.43	4.9	5.88	11.8	15.6	19.6

Combination Table

Model number	Cup	Setting screw	Fitting	Holder	Piping specifications		
					Without connector・Blank	Barb connector・T	Push-in connector・O
NAPD○S-20-6 (-T/O)	PDG-20	TN-PF-25-M6	NAPF○S-20B-6-K (-T/O)	PDH-20-M6	M5X0.8 (Female)	ϕ6 X 4	
NAPD○S-20-15 (-T/O)			NAPF○S-20B-15-K (-T/O)				
NAPD○S-20-30 (-T/O)			NAPF○S-20B-30-K (-T/O)				
NAPD○S-30-6 (-T/O)	PDG-30		NAPF○S-20B-6-K (-T/O)	PDH-30			
NAPD○S-30-15 (-T/O)			NAPF○S-20B-15-K (-T/O)				
NAPD○S-30-30 (-T/O)			NAPF○S-20B-30-K (-T/O)				
NAPD○S-40-6 (-T/O)	PDG-40		NAPF○S-20B-6-K (-T/O)	PDH-40			
NAPD○S-40-15 (-T/O)			NAPF○S-20B-15-K (-T/O)				
NAPD○S-40-30 (-T/O)			NAPF○S-20B-30-K (-T/O)				
NAPD○S-50-6 (-T/O)	PDG-50	TN-PF-50-M6	NAPF○S-20B-6-K (-T/O)	PDH-50			
NAPD○S-50-15 (-T/O)			NAPF○S-20B-15-K (-T/O)				
NAPD○S-50-30 (-T/O)			NAPF○S-20B-30-K (-T/O)				
NAPD○S-60-10	PDG-60	Screw the fitting directly into the holder	NAPF○S-60-10-K	PDH-60	Rc1/8 (Female)	-	
NAPD○S-60-30			NAPF○S-60-30-K				
NAPD○S-60-50			NAPF○S-60-50-K				
NAPD○S-70-10	PDG-70		NAPF○S-60-10-K	PDH-70			
NAPD○S-70-30			NAPF○S-60-30-K				
NAPD○S-70-50			NAPF○S-60-50-K				
NAPD○S-80-10	PDG-80		NAPF○S-60-10-K	PDH-80			
NAPD○S-80-30			NAPF○S-60-30-K				
NAPD○S-80-50			NAPF○S-60-50-K				
NAPD○S-100-10	PDG-100		NAPF○S-60-10-K	PDH-100			
NAPD○S-100-30			NAPF○S-60-30-K				
NAPD○S-100-50			NAPF○S-60-50-K				

※○in the table indicates the vacuum port (T or Y).

NAPDTS·YS Cup with Spring Fitting

Dimensions

(mm)

NAPDT/YS-20

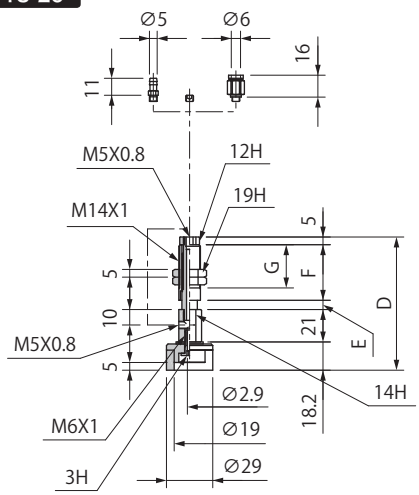

Model number	D	E	F	G	Weight (g)
NAPDT/YS-20-6 (-T/O)	86.2	6	36	28	82.5
NAPDT/YS-20-15 (-T/O)	95.2	15			87.5
NAPDT/YS-20-30 (-T/O)	132.2	30	58	50	112.5

※ The weight value is when without connector selected.

NAPDT/YS-30

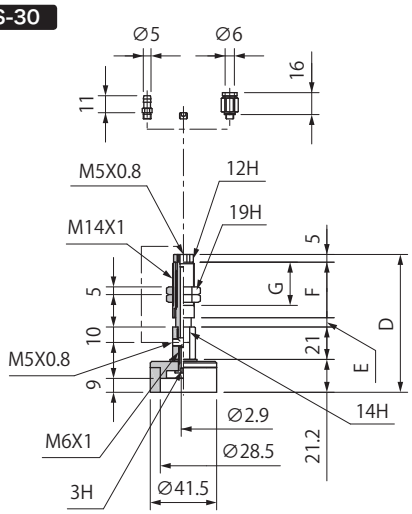

Model number	D	E	F	G	Weight (g)
NAPDT/YS-30-6 (-T/O)	89.2	6	36	28	89
NAPDT/YS-30-15 (-T/O)	98.2	15			94
NAPDT/YS-30-30 (-T/O)	135.2	30	58	50	119

※ The weight value is when without connector selected.

NAPDT/YS-40

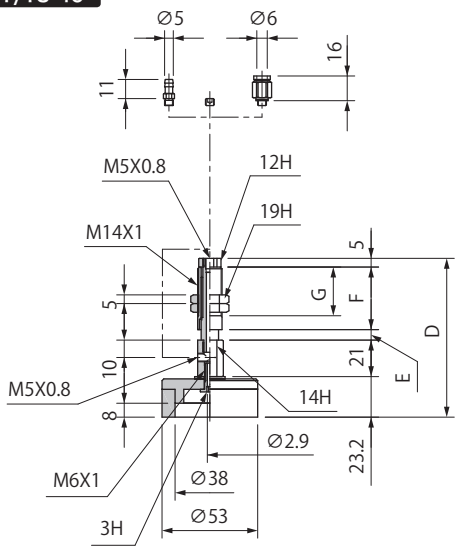

Model number	D	E	F	G	Weight (g)
NAPDT/YS-40-6 (-T/O)	91.2	6	36	28	116.5
NAPDT/YS-40-15 (-T/O)	100.2	15			121.5
NAPDT/YS-40-30 (-T/O)	137.2	30	58	50	146.5

※ The weight value is when without connector selected.

NAPDT/YS-50

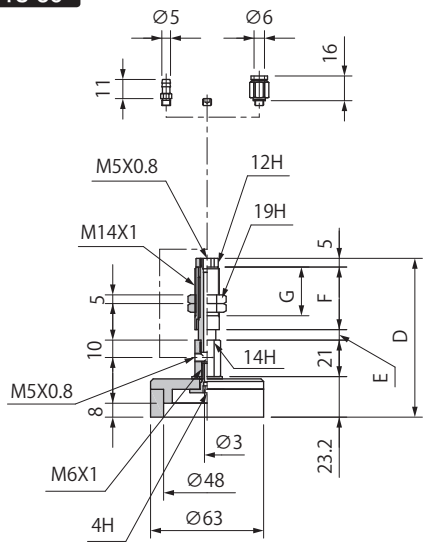

Model number	D	E	F	G	Weight (g)
NAPDT/YS-50-6 (-T/O)	91.2	6	36	28	140
NAPDT/YS-50-15 (-T/O)	100.2	15			145
NAPDT/YS-50-30 (-T/O)	137.2	30	58	50	170

※ The weight value is when without connector selected.

Common Specifications

Connector Weight(g)

Symbol	Tube O.D ϕ 6
T	1.5
O	4.0

Dimensions

(mm)

NAPDT/YS-60

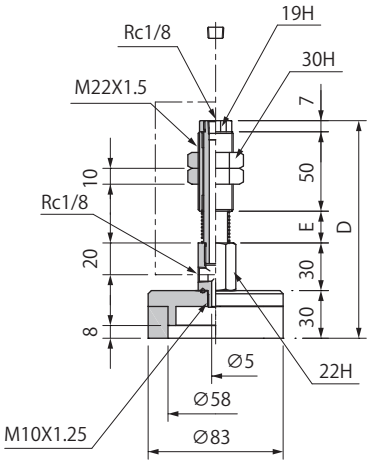

Model number	D	E	Weight (g)
NAPDT/YS-60-10	137	20	436
NAPDT/YS-60-30	167	50	470
NAPDT/YS-60-50	192	75	497

NAPDT/YS-70

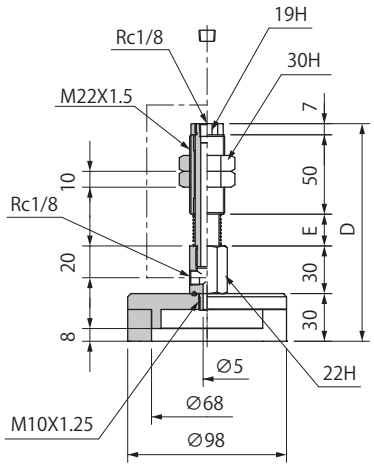

Model number	D	E	Weight (g)
NAPDT/YS-70-10	137	20	510
NAPDT/YS-70-30	167	50	544
NAPDT/YS-70-50	192	75	571

NAPDT/YS-80

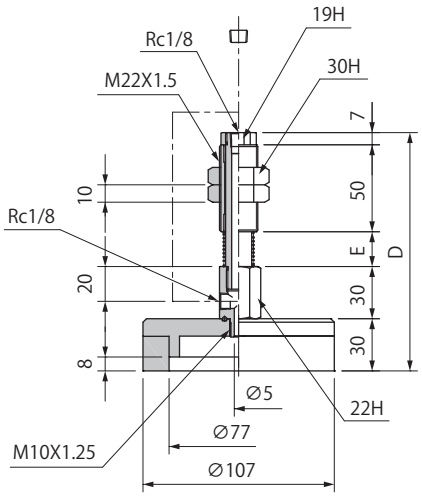

Model number	D	E	Weight (g)
NAPDT/YS-80-10	137	20	560.5
NAPDT/YS-80-30	167	50	594.5
NAPDT/YS-80-50	192	75	621.5

NAPDT/YS-100

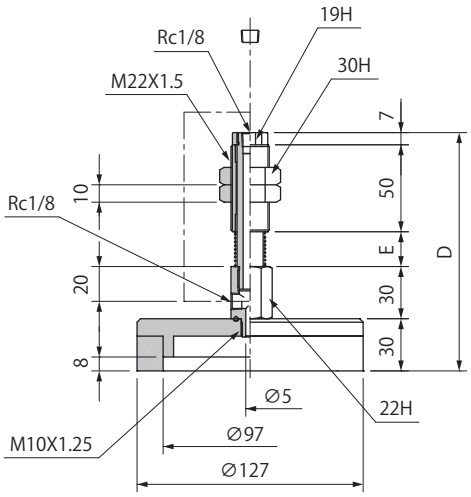

Model number	D	E	Weight (g)
NAPDT/YS-100-10	137	20	681
NAPDT/YS-100-30	167	50	715
NAPDT/YS-100-50	192	75	742

NAPDTH•YH Cup with Non-rotation Spring Fitting

Consisting of fitting, setting screw, holder, suction cup.

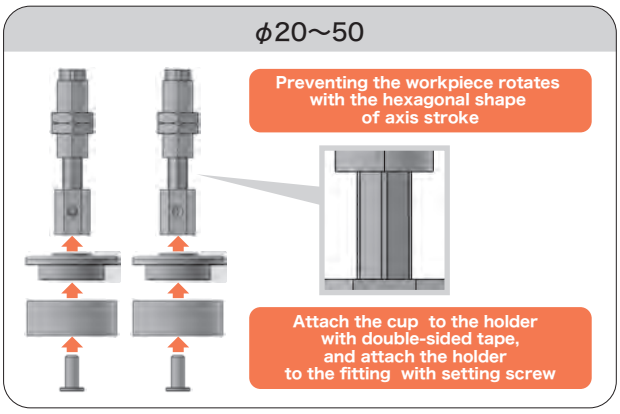

How to Order

NAPD **T** H – **20-6** – **T**

① ② ③

① Vacuum Port

T	Top
Y	Side

② Cup Size - Stroke (mm)

Symbol	Cup size Stroke	Symbol	Cup size Stroke
20-6	ϕ20-6	40-6	ϕ40-6
20-15	ϕ20-15	40-15	ϕ40-15
20-30	ϕ20-30	40-30	ϕ40-30
30-6	ϕ30-6	50-6	ϕ50-6
30-15	ϕ30-15	50-15	ϕ50-15
30-30	ϕ30-30	50-30	ϕ50-30

③ Connector

Blank	N/A
T	Barb
O	Push-in

Spring Specifications

Cup size	Unit	ϕ20~50		
Stroke	mm	6	15	30
Spring load at 0 stroke	N	2.45		2.9
Spring load at full stroke	N	3.43	4.9	5.88

Combination Table

Model number	Cup	Setting screw	Fitting	Holder	Piping specifications		
					Without connector・Blank	Barb connector・T	Push-in connector・O
NAPD○H-20-6 (-T/O)	PDG-20	TN-PF-25-M6	NAPF○H-20B-6-K (-T/O)	PDH-20-M6	M5X0.8 (Female)	ϕ6 X 4	
NAPD○H-20-15 (-T/O)			NAPF○H-20B-15-K (-T/O)				
NAPD○H-20-30 (-T/O)			NAPF○H-20B-30-K (-T/O)				
NAPD○H-30-6 (-T/O)	PDG-30		NAPF○H-20B-6-K (-T/O)	PDH-30			
NAPD○H-30-15 (-T/O)			NAPF○H-20B-15-K (-T/O)				
NAPD○H-30-30 (-T/O)			NAPF○H-20B-30-K (-T/O)				
NAPD○H-40-6 (-T/O)	PDG-40		NAPF○H-20B-6-K (-T/O)	PDH-40			
NAPD○H-40-15 (-T/O)			NAPF○H-20B-15-K (-T/O)				
NAPD○H-40-30 (-T/O)			NAPF○H-20B-30-K (-T/O)				
NAPD○H-50-6 (-T/O)	PDG-50	TN-PF-50-M6	NAPF○H-20B-6-K (-T/O)	PDH-50			
NAPD○H-50-15 (-T/O)			NAPF○H-20B-15-K (-T/O)				
NAPD○H-50-30 (-T/O)			NAPF○H-20B-30-K (-T/O)				

※○in the table indicates the vacuum port (T or Y).

Dimensions

(mm)

NAPDT/YH-20

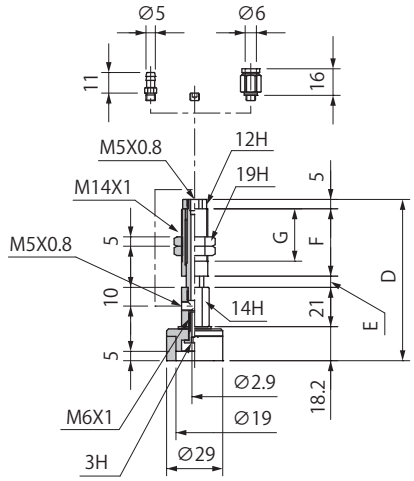

Model number	D	E	F	G	Weight (g)
NAPDT/YH-20-6 (-T/O)	86.2	6	36	28	78
NAPDT/YH-20-15 (-T/O)	95.2	15			83
NAPDT/YH-20-30 (-T/O)	132.2	30	58	50	107

※ The weight value is when without connector selected.

NAPDT/YH-30

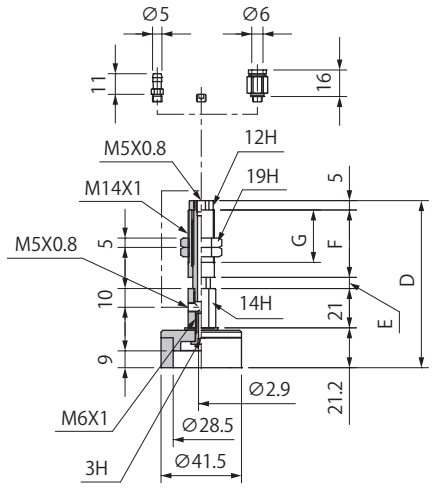

Model number	D	E	F	G	Weight (g)
NAPDT/YH-30-6 (-T/O)	89.2	6	36	28	84.5
NAPDT/YH-30-15 (-T/O)	98.2	15			89.5
NAPDT/YH-30-30 (-T/O)	135.2	30	58	50	113.5

※ The weight value is when without connector selected.

NAPDT/YH-40

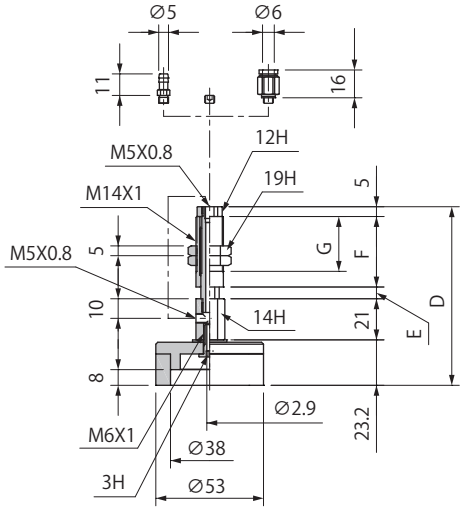

Model number	D	E	F	G	Weight (g)
NAPDT/YH-40-6 (-T/O)	91.2	6	36	28	112
NAPDT/YH-40-15 (-T/O)	100.2	15			117
NAPDT/YH-40-30 (-T/O)	137.2	30	58	50	141

※ The weight value is when without connector selected.

NAPDT/YH-50

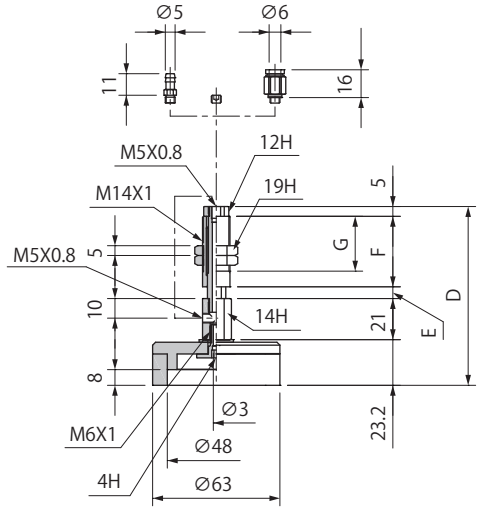

Model number	D	E	F	G	Weight (g)
NAPDT/YH-50-6 (-T/O)	91.2	6	36	28	130.5
NAPDT/YH-50-15 (-T/O)	100.2	15			135.5
NAPDT/YH-50-30 (-T/O)	137.2	30	58	50	159.5

※ The weight value is when without connector selected.

Common Specifications

Connector Weight(g)

Symbol	Tube O.D ϕ 6
T	1.5
O	4.0

PF Series

Flat Cup

RoHS

02 Suction Cup
PA
PB
PC
PCD
PD
PF
PFO
PH
PJ
CORE
PK2
PK2B
PK2L
PL
PN
PN-B
PP
PQ
PR
PU
PW
RA
SM
TN

Standard flat type cup. For workpieces with smooth and even surfaces!

Cardboard

Metal plate

Plastic plate

Wide range of cup sizes.

Round type	ϕ1	ϕ1.5	ϕ2	ϕ3.5	ϕ5	ϕ6	ϕ8	ϕ10	ϕ15	ϕ20	ϕ25
	ϕ30	ϕ35	ϕ40	ϕ50	ϕ60	ϕ80	ϕ95	ϕ120	ϕ150	ϕ200	
Oval type	2×4	2.2×4.2	3.5×7								

Various fittings for many kinds of applications.

Fixed fitting

Spring fitting

Compact type fitting

Suction Cup

PFG	Cup size (mm) ϕ1～200		P.279

Fitting

Type	Applicable cup size (mm)	Stroke (mm)	Vacuum port	Piping・Connector	Page
Cup with compact fixed fitting PS - □ - F	ϕ 1.5～50	N/A	Top	Female screw	P.285
Cup with compact fixed fitting PS - □ - M	ϕ 1.5～50	N/A	Top	Male screw	P.285
Cup with fixed fitting PFTK	ϕ 1.5～50	N/A	Top	Barb	P.289
	ϕ 60～95			Female screw	
Cup with fixed fitting PFYK	ϕ 1.5～50	N/A	Side	Barb	P.289
	ϕ 60～200			Female screw	
Cup with compact spring fitting PSS	ϕ 1.5～15	3,5	Top	Male screw	P.295
Cup with spring fitting NAPFTS	ϕ 1.5～8	3, 6	Top	Female screw Push-in Barb	P.297
	ϕ 10～15	3, 10, 15			
	ϕ 20～50	6, 15, 30			
	ϕ 60～95	10, 30, 50		Female screw	
	ϕ 120～200	20, 50			
Cup with spring fitting NAPFYS	ϕ 1.5～8	3, 6	Side	Female screw Push-in Barb	P.297
	ϕ 10～15	3, 10, 15			
	ϕ 20～50	6, 15, 30			
	ϕ 60～95	10, 30, 50		Female screw	
	ϕ 120～200	20, 50			
Cup with non-rotation spring fitting NAPFTH	ϕ 1.5～15	3, 10, 15	Top	Female screw Push-in Barb	P.303
	ϕ 20～50	6, 15, 30			
Cup with non-rotation spring fitting NAPFYH	ϕ 1.5～15	3, 10, 15	Side	Female screw Push-in Barb	P.303
	ϕ 20～50	6, 15, 30			
Setting screw	ϕ 1.5～50	—	—	—	P.503

Suction Cup Selection Guide ••→ P.163

PFG Flat Cup

How to Order

PFG – 2A – N
① ②

①Cup Size(mm)

Symbol	Cup size		Symbol	Cup size		Symbol	Cup size
1	φ 1	Note2	5	φ 5	Note2	30	φ 30
1.5A	φ 1.5		6A	φ 6		35	φ 35
1.5	φ 1.5	Note2	6	φ 6	Note2	40	φ 40
2A	φ 2		8A	φ 8		50	φ 50
2	φ 2	Note2	8	φ 8	Note2	60	φ 60
2X4A	2X4	Note1	10A	φ 10		80	φ 80
2X4	2.2X4.2	Note1,2	10	φ 10	Note2	95	φ 95
3.5A	φ 3.5		15A	φ 15		120	φ 120
3.5	φ 3.5	Note2	15	φ 15		150	φ 150
3.5X7A	φ 3.5X7	Note1	20	φ 20		200	φ 200
3.5X7	φ 3.5X7	Note1,2	20B	φ 20			
5A	φ 5		25	φ 25			

Note1) Oval cup.
Note2) Sale of cup only.

②Cup Rubber Material

Symbol	Material
N	NBR (Nitrile rubber)
S	Silicone rubber
U	Urethane rubber
F	Fluorine rubber
NE	Conductive NBR (Nitrile rubber)
SE	Conductive silicone rubber

※Please consult with us for other material.

Cup Rubber Material Standard Specifications

Symbol	Material	Hardness (A/s)	Ambient temperature (℃)	Color	Volume resistivity Note1.2
N	NBR(Nitrile rubber)	55	−26～120	Black	-
S	Silicone rubber	55	−60～250	Translucent white	-
U	Urethane rubber	55	−20～75	Blue	-
F	Fluorine rubber	70	−10～230	Black with white dot	-
NE	Conductive NBR (Nitrile rubber)	70	−26～120	Black with blue dot	10^2～10^3 Ω・cm
SE	Conductive silicone rubber	55	−60～250	Black with red dot	10^2～10^4 Ω・cm

Note1) Volume resistivity shows conductivity, resistance value is per cm^3.
Note2) It is the measured value of in our designated test piece.

Applicable Rubber Material Table

Material	Color	Symbol	Round type																															Oval type			
			1	1.5A	1.5	2A	2	3.5A	3.5	5A	5	6A	6	8A	8	10A	10	15A	15	20	20B	25	30	35	40	50	60	80	95	120	150	200	2X4	2X4A	3.5X7	3.5X7A
NBR (Nitrile rubber)	Black	N	●	●	●	●	●	●	●	●	●	●	●	●	●	●	●	●	●	●	●	●	●	●	●	●	●	●	●	●	●	●	●	●	●	●
Silicone rubber	Translucent white	S	●	●	●	●	●	●	●	●	●	●	●	●	●	●	●	●	●	●	●	●	●	●	●	●	●	●	●	●	●	●	●	●	●	●
Urethane rubber	Blue	U	●	●	●	●	●	●	●	●	●	●	●	●	●	●	●	●	●	●	●	●	●	●	●	●	●	●	●	●	●	●	●	●	●	●
Fluorine rubber	Black with white dot	F	●	●	●	●	●	●	●	●	●	●	●	●	●	●	●	●	●	●	●	●	●	●	●	●	●	●	●	●	●	●	●	●	●	●
Conductive NBR (Nitrile rubber)	Black with blue dot	NE	●	●	●	●	●	●	●	●	●	●	●	●	●	●	●	●	●	●	●	●	●	●	●	●	○	○	○	○	○	○	●	●	●	●
Conductive silicone rubber	Black with red dot	SE	●	●	●	●	●	●	●	●	●	●	●	●	●	●	●	●	●	●	●	●	●	●	●	●	○	○	○	○	○	○	●	●	●	●

●: In stock　○Made to order　×: None
※Please consult with us for other material.

Dimensions

(mm)

PFG-1

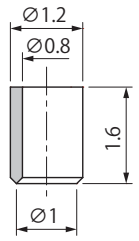

PFG-1.5A

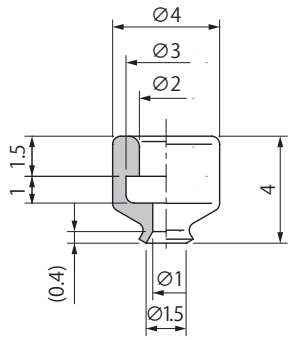

PFG-1.5

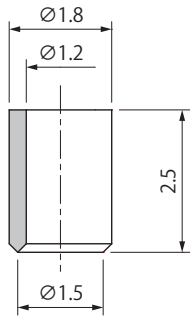

PFG-2A

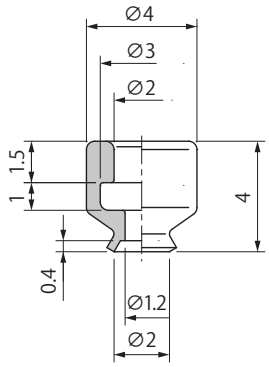

PFG-2

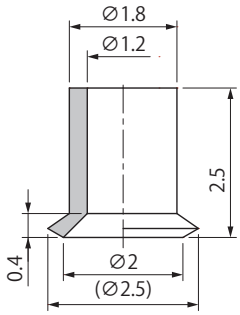

PFG-3.5A

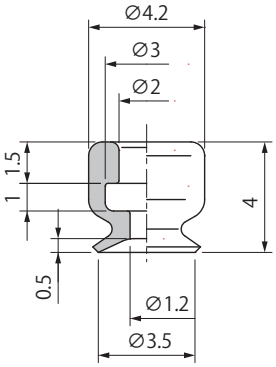

PFG-3.5

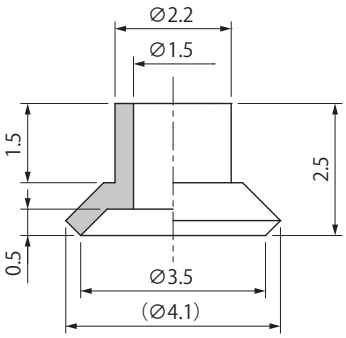

PFG-2X4A

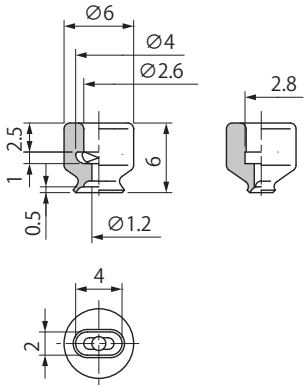

PFG-2x4

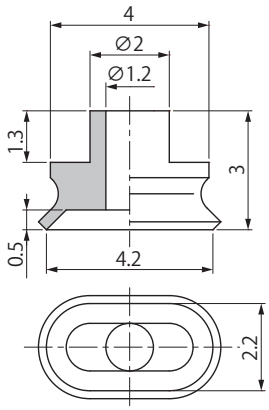

Weight

(g)

Model ＼ Material	N	S	U	F	NE	SE	Applicable setting screw (Screw specifications)
PFG-1.5A	0.1	0.1	0.1	0.1	0.1	0.1	TN-PS-2A-M3 (Male M3X0.5) TN-PS-2A-M3F (Female M3X0.5) TN-PS-2A-M5 (Male M5X0.8)
PFG-2A	0.1	0.1	0.1	0.1	0.1	0.1	
PFG-3.5A	0.1	0.1	0.1	0.1	0.1	0.1	
PFG-2X4A	0.2	0.2	0.2	0.3	0.2	0.2	TN-PS-2X4A-M3 (Male M3X0.5) TN-PS-2X4A-M3F (Female M3X0.5)
PFG-1	0.1	0.1	0.1	0.1	0.1	0.1	-
PFG-1.5	0.1	0.1	0.1	0.1	0.1	0.1	-
PFG-2	0.1	0.1	0.1	0.1	0.1	0.1	-
PFG-3.5	0.1	0.1	0.1	0.1	0.1	0.1	-
PFG-2X4	0.1	0.1	0.1	0.1	0.1	0.1	-

※Please refer to P.503 for setting screw detailed specifications.

Symbol	Material
N	NBR(Nitrile rubber)
S	Silicone rubber
U	Urethane rubber
F	Fluorine rubber
NE	Conductive NBR (Nitrile rubber)
SE	Conductive silicone rubber

PFG Flat Cup

Dimensions

(mm)

PFG-3.5X7A

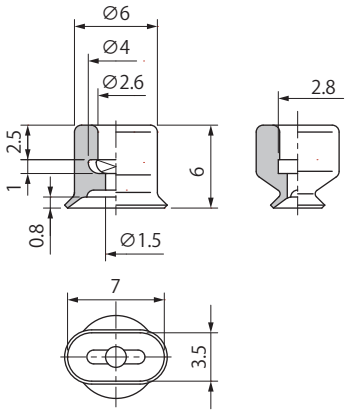

PFG-3.5X7

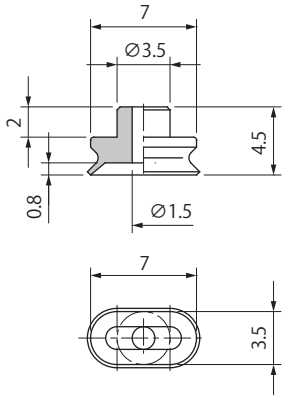

PFG-5A

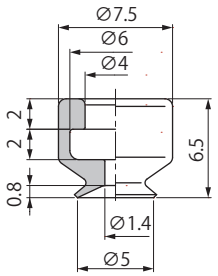

PFG-5

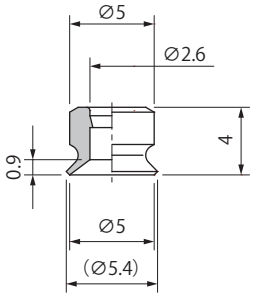

PFG-6A

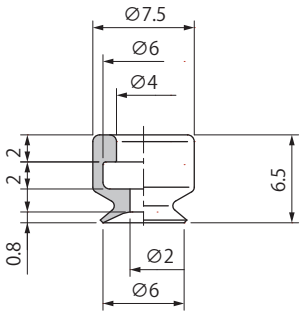

PFG-6

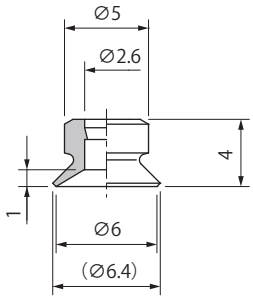

PFG-8A

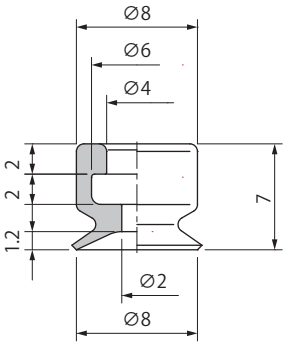

PFG-8

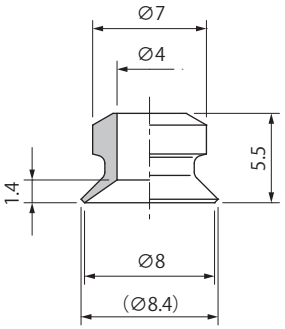

PFG-10A

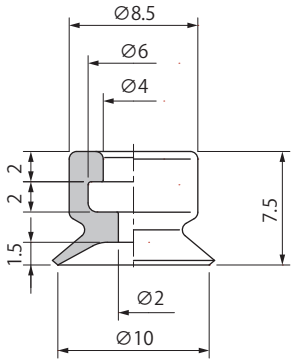

Weight

(g)

Model ＼ Material	N	S	U	F	NE	SE	Applicable setting screw (Screw specifications)
PFG-3.5X7A	0.2	0.2	0.2	0.3	0.2	0.2	TN-PS-2X4A-M3 (Male M3X0.5) TN-PS-2X4A-M3F (Female M3X0.5)
PFG-5A	0.2	0.2	0.2	0.3	0.2	0.2	TN-PS-10-M5 (Male M5X0.8) TN-PS-10-M5 (Female M5X0.8)
PFG-6A	0.2	0.2	0.2	0.3	0.2	0.2	
PFG-8A	0.3	0.3	0.3	0.4	0.3	0.3	
PFG-10A	0.4	0.4	0.4	0.6	0.4	0.4	
PFG-3.5X7	0.1	0.1	0.1	0.1	0.1	0.1	-
PFG-5	0.1	0.1	0.1	0.1	0.1	0.1	-
PFG-6	0.1	0.1	0.1	0.1	0.1	0.1	-
PFG-8	0.1	0.1	0.2	0.2	0.2	0.1	-

※Please refer to P.503 for setting screw detailed specifications.

Symbol	Material
N	NBR(Nitrile rubber)
S	Silicone rubber
U	Urethane rubber
F	Fluorine rubber
NE	Conductive NBR (Nitrile rubber)
SE	Conductive silicone rubber

Dimensions

(mm)

PFG-10

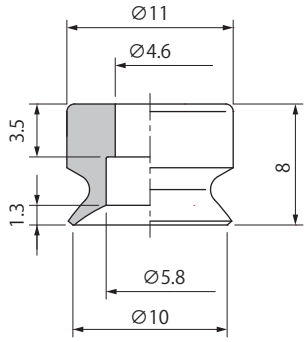

PFG-15A

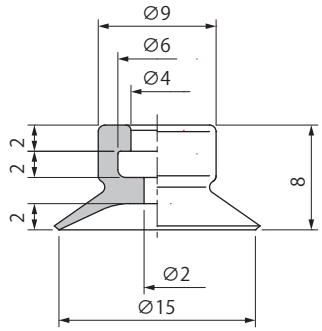

PFG-15

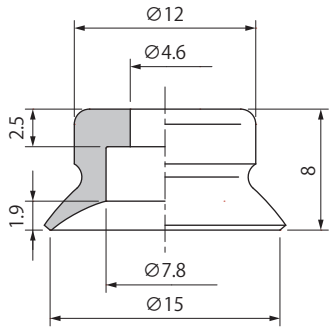

PFG-20

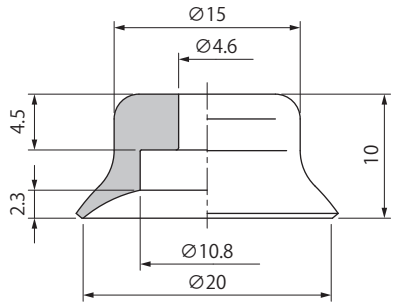

PFG-20B

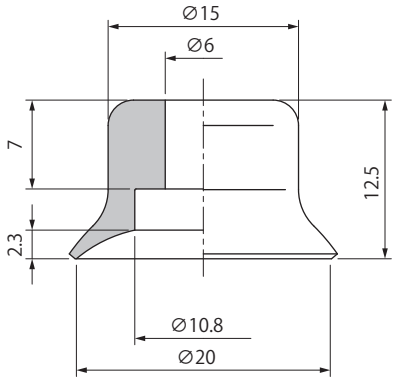

PFG-25

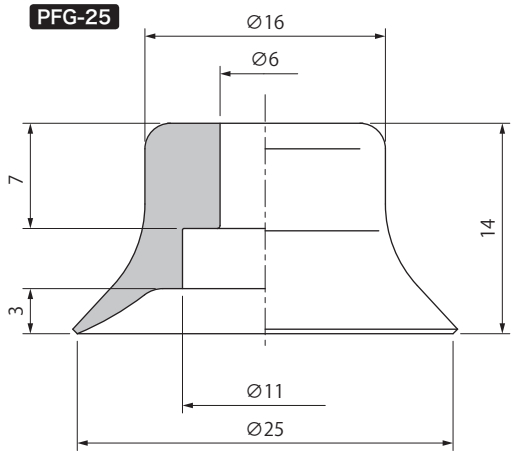

Weight

(g)

Model ＼ Material	N	S	U	F	NE	SE	Applicable setting screw (Screw specifications)
PFG-10	0.5	0.5	0.6	0.8	0.6	0.5	TN-PF-10-M5 (Male M5X0.8)
PFG-15A	0.5	0.5	0.5	0.8	0.5	0.5	TN-PS-10-M5 (Male M5X0.8) TN-PS-10-M5F (Female M5X0.8)
PFG-15	0.7	0.7	0.7	1.1	0.7	0.7	TN-PF-15-M5 (Male M5X0.8)
PFG-20	1.5	1.5	1.6	2.4	1.6	1.5	TN-PF-20-M5 (Male M5X0.8)
PFG-20B	1.9	1.9	2.0	3.0	2.0	1.9	TN-PF-25-M6 (Male M6X1.0)
PFG-25	2.6	2.6	2.8	4.2	2.8	2.6	

※Please refer to P.503 for setting screw detailed specifications.

Symbol	Material
N	NBR(Nitrile rubber)
S	Silicone rubber
U	Urethane rubber
F	Fluorine rubber
NE	Conductive NBR (Nitrile rubber)
SE	Conductive silicone rubber

PFG Flat Cup

Dimensions

(mm)

PFG-30

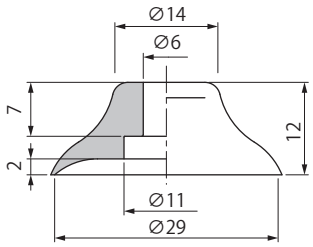

PFG-35

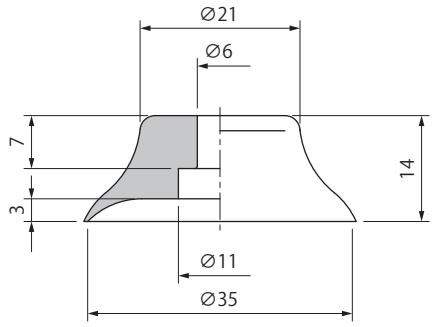

PFG-40

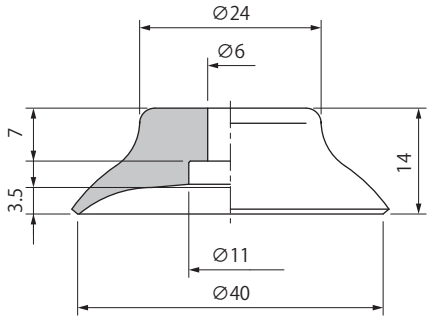

PFG-50

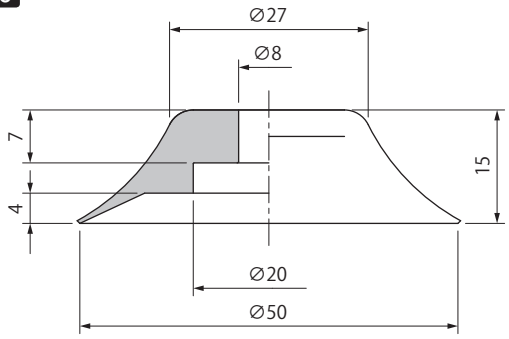

PFG-60

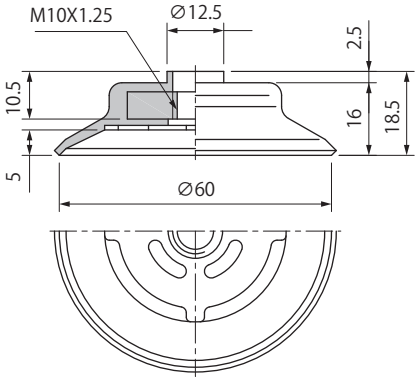

PFG-80

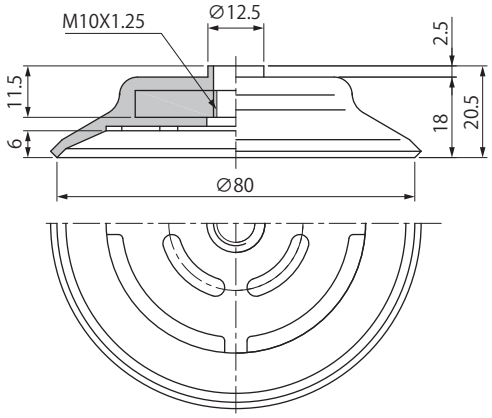

Weight

(g)

Model ＼ Material	N	S	U	F	NE	SE	Applicable setting screw (Screw specifications)
PFG-30	3.2	3.2	3.4	5.2	3.4	3.2	TN-PF-25-M6 (Male M6X1.0)
PFG-35	6.0	6.0	6.3	9.6	6.3	6.0	
PFG-40	7.5	7.5	7.9	12.0	7.9	7.5	
PFG-50	8.9	8.9	9.4	14.3	9.4	8.9	TN-PF-50-M6 (Male M6X1.0) TN-PF-50-M8 (Male M8X1.25)
PFG-60	23.4	23.4	24.1	31.5	24.1	23.4	-
PFG-80	51.0	51.0	52.4	67.2	52.4	51.0	-

※Please refer to P.503 for setting screw detailed specifications.

Symbol	Material
N	NBR(Nitrile rubber)
S	Silicone rubber
U	Urethane rubber
F	Fluorine rubber
NE	Conductive NBR (Nitrile rubber)
SE	Conductive silicone rubber

Dimensions

(mm)

PFG-95

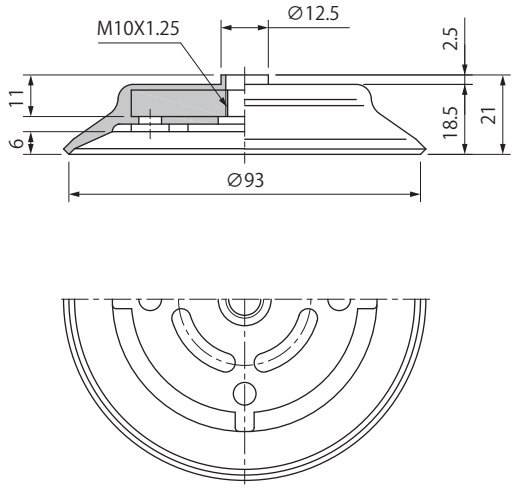

PFG-120

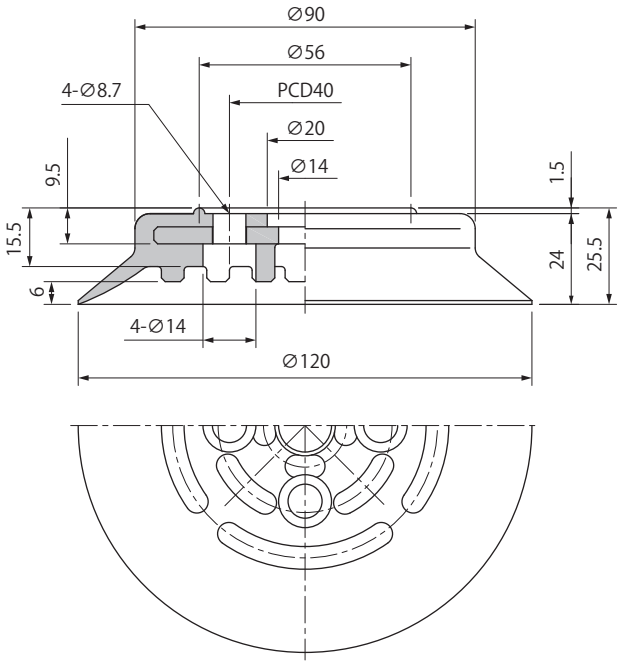

PFG-150

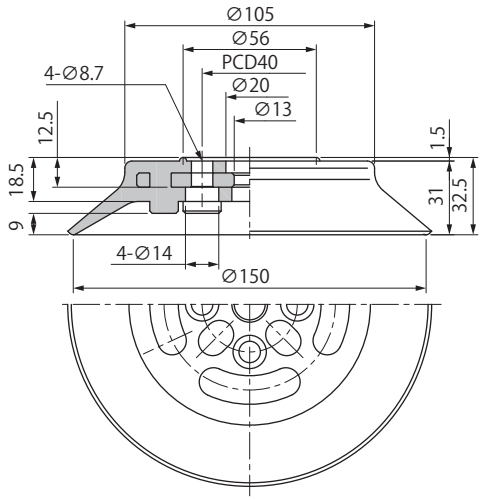

PFG-200

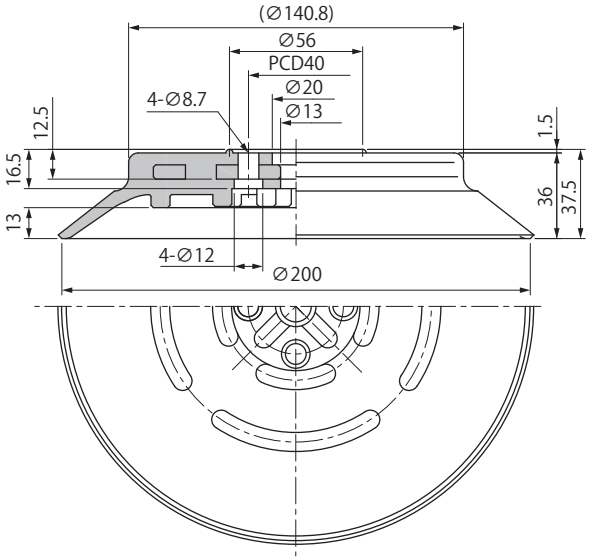

Weight

(g)

Model ＼ Material	N	S	U	F	NE	SE
PFG-95	84.6	84.6	86.7	109.6	86.7	84.6
PFG-120	246.0	246.0	250.8	303.6	250.8	246.0
PFG-150	475.0	475.0	484.7	591.4	484.7	475.0
PFG-200	823.0	823.0	841.7	1046.8	841.7	823.0

Symbol	Material
N	NBR(Nitrile rubber)
S	Silicone rubber
U	Urethane rubber
F	Fluorine rubber
NE	Conductive NBR (Nitrile rubber)
SE	Conductive silicone rubber

PS Cup with Compact Fixed Fitting

Male Screw

Female Screw

Simple construction of the cup and the screw.

ϕ1.5～10(PFG-□A type only)

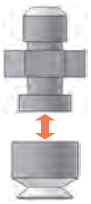

Screw and the cup can be disassembled

Attach the cup directly to the screw

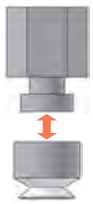

Model number	Cup	Setting screw	Screw size
PS-1.5A-M-□	PFG-1.5A-□	TN-PS-2A-M3	M3X0.5
PS-2A-M-□	PFG-2A-□		
PS-3.5A-M-□	PFG-3.5A-□		
PS-5A-M-□	PFG-5A-□	TN-PS-10-M5	M5X0.8
PS-6A-M-□	PFG-6A-□		
PS-8A-M-□	PFG-8A-□		
PS-10A-M-□	PFG-10A-□		
PS-2X4A-M-□	PFG-2X4A-□	TN-PS-2X4A-M3	M3X0.5
PS-3.5X7A-M-□	PFG-3.5X7A-□		

Model number	Cup	Setting screw	Screw size
PS-1.5A-F-□	PFG-1.5A-□	TN-PS-2A-M3F	M3X0.5
PS-2A-F-□	PFG-2A-□		
PS-3.5A-F-□	PFG-3.5A-□		
PS-5A-F-□	PFG-5A-□	TN-PS-10-M5F	M5X0.8
PS-6A-F-□	PFG-6A-□		
PS-8A-F-□	PFG-8A-□		
PS-10A-F-□	PFG-10A-□		
PS-2X4A-F-□	PFG-2X4A-□	TN-PS-2X4A-M3F	M3X0.5
PS-3.5X7A-F-□	PFG-3.5X7A-□		

ϕ15～50

PS-15-M-□
PS-20-M-□
PS-25-M-□
PS-30-M-□
PS-35-M-□
PS-40-M-□
PS-50-M-□

R1/8

Screw and the cup are fixed

Screw and the cup can not be disassembled

Rp1/8 depth 9

PS-15-F-□
PS-20-F-□
PS-25-F-□
PS-30-F-□
PS-35-F-□
PS-40-F-□
PS-50-F-□

※□in the table indicates the cup material.

How to Order

PS – 2A – M – N

① ② ③

①Cup Size(mm)

1.5A	ϕ 1.5	10A	ϕ 10
2A	ϕ 2	15	ϕ 15
2X4A	2X4 Note1	20	ϕ 20
3.5A	ϕ 3.5	25	ϕ 25
3.5X7A	3.5X7 Note1	30	ϕ 30
5A	ϕ 5	35	ϕ 35
6A	ϕ 6	40	ϕ 40
8A	ϕ 8	50	ϕ 50

Note1)Oval cup.

②Screw Type

M	Male screw
F	Female screw

③Cup Rubber Material

N	NBR(Nitrile rubber)
S	Silicone rubber
U	Urethane rubber
F	Fluorine rubber
NE	Conductive NBR (Nitrile rubber)
SE	Conductive silicone rubber

※ Please consult with us for other material.

Dimensions

(mm)

PS-1.5A/2A/3.5A-M

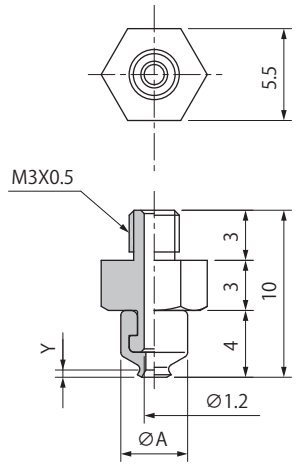

Model number	A	Y	Weight (g)
PS-1.5A-M- □	1.5	0.4	1
PS-2A-M- □	2	0.5	
PS-3.5A-M- □	3.5		

※□ in the table indicates the cup material.
※ The weight value is when NBR（Nitrile rubber）selected.

PS-2X4A/3.5X7A-M

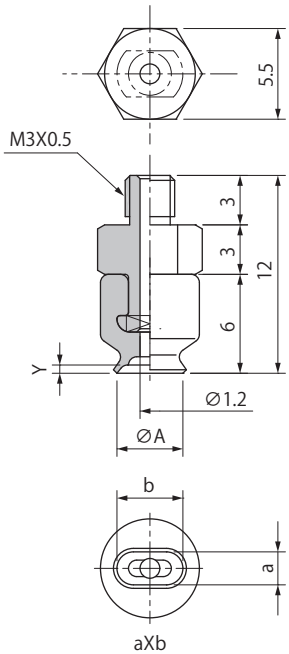

Model number	A	Y	Weight (g)
PS-2X4A-M- □	2X4	0.5	1
PS-3.5X7A-M- □	3.5X7	0.8	

※□ in the table indicates the cup material.
※ The weight value is when NBR（Nitrile rubber）selected.
※ aXb indicates A size of oval cup.

PS-5A/6A/8A/10A-M

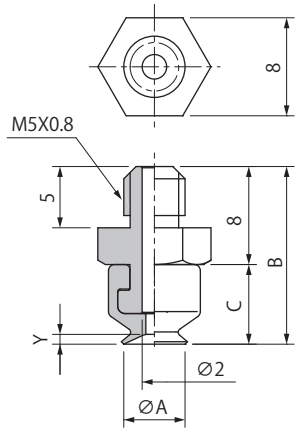

Model number	A	B	C	Y	Weight (g)
PS-5A-M- □	5	14.5	6.5	0.8	1.5
PS-6A-M- □	6				
PS-8A-M- □	8	15	7	1.2	
PS-10A-M- □	10	15.5	7.5	1.5	

※□ in the table indicates the cup material.
※ The weight value is when NBR（Nitrile rubber）selected.

PS-15/20/25/30/35/40/50-M

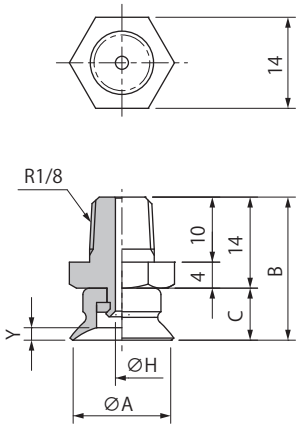

Model number	A	B	C	H	Y	Weight (g)
PS-15-M- □	15	22	8	2	1.9	8
PS-20-M- □	20	24	10		2.3	
PS-25-M- □	25	28	14	3	3	12
PS-30-M- □	29	26	12		2	
PS-35-M- □	35	28	14		3	
PS-40-M- □	40				3.5	
PS-50-M- □	50	29	15	4	4	17

※□ in the table indicates the cup material.
※ The weight value is when NBR（Nitrile rubber）selected.

PS Cup with Compact Fixed Fitting

Dimensions

(mm)

PS-1.5A/2A/3.5A-F

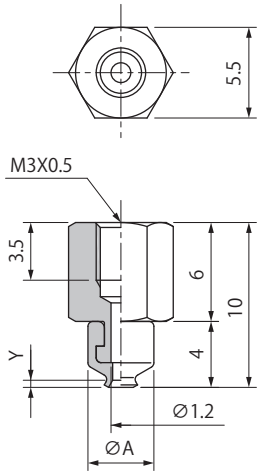

Model number	A	Y	Weight (g)
PS-1.5A-F-□	1.5	0.4	1.5
PS-2A-F-□	2		
PS-3.5A-F-□	3.5	0.5	

※□ in the table indicates the cup material.
※ The weight value is when NBR（Nitrile rubber）selected.

PS-2X4A/3.5X7A-F

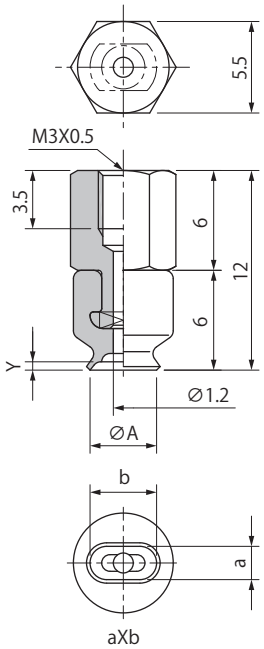

Model number	A	Y	Weight (g)
PS-2X4A-F-□	2X4	0.5	1.5
PS-3.5X7A-F-□	3.5X7	0.8	

※□ in the table indicates the cup material.
※ The weight value is when NBR（Nitrile rubber）selected.
※ aXb indicates A size of oval cup.

PS-5A/6A/8A/10A-F

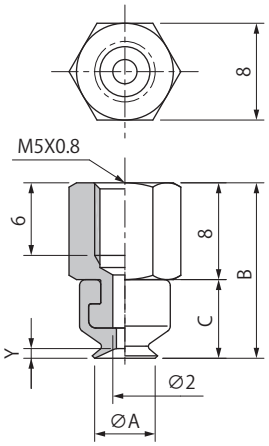

Model number	A	B	C	Y	Weight (g)
PS-5A-F-□	5	14.5	6.5	0.8	2.5
PS-6A-F-□	6				
PS-8A-F-□	8	15	7	1.2	
PS-10A-F-□	10	15.5	7.5	1.5	

※□ in the table indicates the cup material.
※ The weight value is when NBR（Nitrile rubber）selected.

PS-15/20/25/30/35/40/50-F

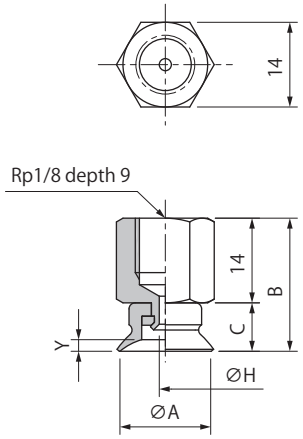

Model number	A	B	C	H	Y	Weight (g)
PS-15-F-□	15	22	8	2	1.9	9
PS-20-F-□	20	24	10	3	2.3	
PS-25-F-□	25	28	14		3	13
PS-30-F-□	29	26	12		2	
PS-35-F-□	35	28	14		3	
PS-40-F-□	40				3.5	
PS-50-F-□	50	29	15	4	4	18

※□ in the table indicates the cup material.
※ The weight value is when NBR（Nitrile rubber）selected.

02
Suction Cup
PA
PB
PC
PCD
PD
PF
PFO
PH
PJ
CORE
PK2
PK2B
PK2L
PL
PN
PN-B
PP
PQ
PR
PU
PW
RA
SM
TN

PFTK•YK Cup with Fixed Fitting

Consisting of fitting, setting screw, suction cup.

ϕ1.5~3.5 2X4 Note 3.5X7 Note

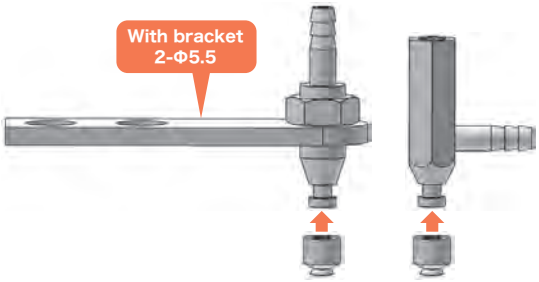

Attach the cup directly to the fitting

ϕ5~10

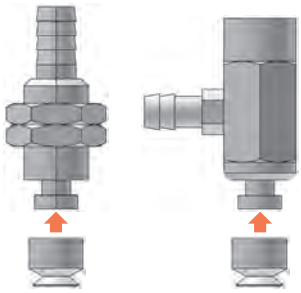

Attach the cup directly to the fitting

Note) The cup is integrated to the fitting with adhesive

ϕ15~50

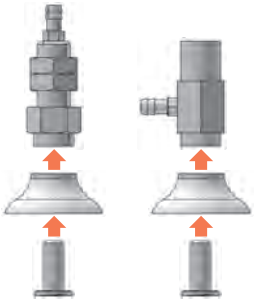

Attach the cup to the fitting with setting screw

ϕ60~200

Screw the fitting directly to the cup
(ϕ100 can not be disassembled)

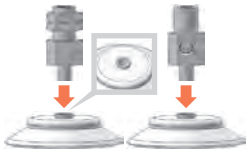

ϕ60 ~ 95 : Screw the fitting directly into the female screw in the cup

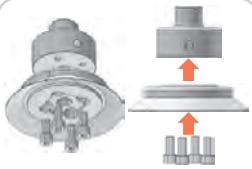

ϕ120 ~ 200 : Mounting by bolts those are attached to the fitting

How to Order

PF T K – 2A – N
① ② ③

① Vacuum Port

T	Top Note1
Y	Side

Note1) ϕ1.5~ϕ95 only.

② Cup Size (mm)

Symbol	Cup size	Symbol	Cup size	Symbol	Cup size
1.5A	ϕ1.5	8A	ϕ8	40	ϕ40
2A	ϕ2	10A	ϕ10	50	ϕ50
2X4	2.2X4.2 Note1	15	ϕ15	60	ϕ60
3.5A	ϕ3.5	20	ϕ20	80	ϕ80
3.5X7	3.5X7 Note1	25	ϕ25	95	ϕ95
5A	ϕ5	30	ϕ30	100	ϕ100 Note2
6A	ϕ6	35	ϕ35	120	ϕ120 Note2
				150	ϕ150 Note2
				200	ϕ200 Note2

Note1) Oval cup.
Note2) Side port only.

③ Cup Rubber Material

Symbol	Material
N	NBR(Nitrile rubber)
S	Silicone rubber
U	Urethane rubber
F	Fluorine rubber
NE	Conductive NBR (Nitrile rubber)
SE	Conductive silicone rubber

※ Please consult with us for other material.

Combination Table

Top Port

Model number	Cup	Setting screw	Fitting	Piping specifications	
PFTK-1.5A- □	PFG-1.5A- □	Attach the cup directly to the fitting	PFTK-1.5A-K	Barb	ϕ 4X2.5
PFTK-2A- □	PFG-2A- □				
PFTK-3.5A- □	PFG-3.5A- □				
PFTK-2X4- □	PFG-2X4- □	The cup are integrated to the fitting with adhesive	PFTK-2X4-K		
PFTK-3.5X7- □	PFG-3.5X7- □		PFTK-3.5X7-K		
PFTK-5A- □	PFG-5A- □	Attach the cup directly to the fitting	PFTK-5A-K		ϕ 6X4
PFTK-6A- □	PFG-6A- □				
PFTK-8A- □	PFG-8A- □				
PFTK-10A- □	PFG-10A- □		PFTK-10A-K		
PFTK-15- □	PFG-15- □	TN-PF-15-M5	PFTK-15-K		
PFTK-20- □	PFG-20- □	TN-PF-20-M5			
PFTK-25- □	PFG-25- □	TN-PF-25-M6	PFTK-25-K		
PFTK-30- □	PFG-30- □				
PFTK-35- □	PFG-35- □				
PFTK-40- □	PFG-40- □				
PFTK-50- □	PFG-50- □	TN-PF-50-M8	PFTK-50-K		
PFTK-60- □	PFG-60- □	Screw the fitting directly into the female screw in the cup	PFTK-60-K	Rc1/8 (Female)	-
PFTK-80- □	PFG-80- □				
PFTK-95- □	PFG-95- □				

※□ in the table indicates the cup material.

Side Port

Model number	Cup	Setting screw	Fitting	Piping specifications	
PFYK-1.5A- □	PFG-1.5A- □	Attach the cup directly to the fitting	PFYK-1.5A-K	Barb	ϕ 4X2.5
PFYK-2A- □	PFG-2A- □				
PFYK-3.5A- □	PFG-3.5A- □				
PFYK-2X4- □	PFG-2X4- □	The cup are integrated to the fitting with adhesive	PFYK-2X4-K		
PFYK-3.5X7- □	PFG-3.5X7- □		PFYK-3.5X7-K		
PFYK-5A- □	PFG-5A- □	Attach the cup directly to the fitting	PFYK-5A-K		ϕ 6X4
PFYK-6A- □	PFG-6A- □				
PFYK-8A- □	PFG-8A- □				
PFYK-10A- □	PFG-10A- □				
PFYK-15- □	PFG-15- □	TN-PF-15-M5	PFYK-15-K		
PFYK-20- □	PFG-20- □	TN-PF-20-M5			
PFYK-25- □	PFG-25- □	TN-PF-25-M6	PFYK-25-K		
PFYK-30- □	PFG-30- □				
PFYK-35- □	PFG-35- □				
PFYK-40- □	PFG-40- □				
PFYK-50- □	PFG-50- □	TN-PF-50-M8	PFYK-50-K		
PFYK-60- □	PFG-60- □	Screw the fitting directly into the female screw in the cup	PFYK-60-K	Rc1/8 (Female)	-
PFYK-80- □	PFG-80- □				
PFYK-95- □	PFG-95- □				
PFYK-100- □	Cup and fitting can not be disassembled				
PFYK-120- □	PFG-120- □	Mounting by bolts(4 pieces) those are attached to the fitting	PFYK-120-K		
PFYK-150- □	PFG-150- □				
PFYK-200- □	PFG-200- □				

※□ in the table indicates the cup material.

PFTK•YK Cup with Fixed Fitting

Dimensions

(mm)

Top Port PFTK-1.5A/2A/3.5A

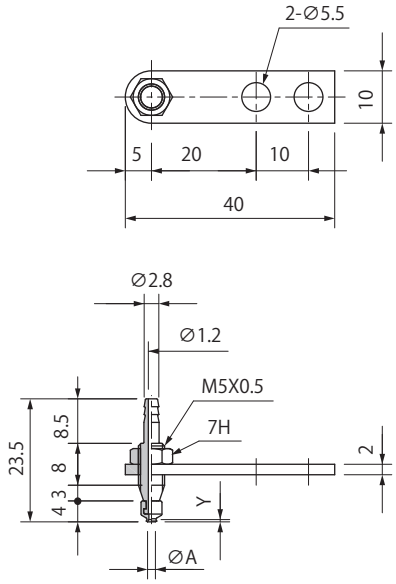

Model number	A	Y	Weight (g)
PFTK-1.5A-□	1.5	0.4	8
PFTK-2A-□	2		
PFTK-3.5A-□	3.5	0.5	

※□ in the table indicates the cup material.
※ The weight value is when NBR（Nitrile rubber）selected.

Top Port PFTK-2X4/3.5X7

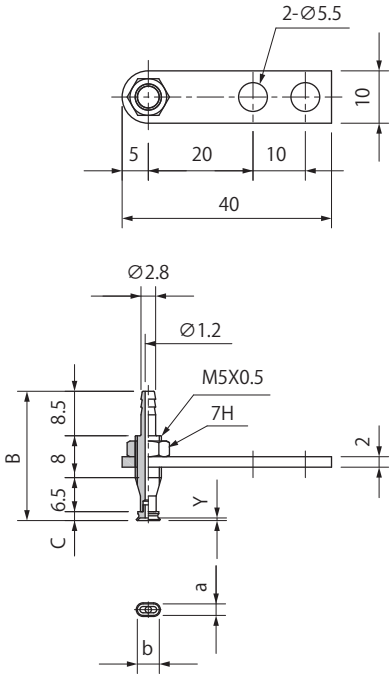

Model number	A	B	C	Y	Weight (g)
PFTK-2X4-□	2.2X4.2	24.7	1.7	0.5	8
PFTK-3.5X7-□	3.5X7	25.5	2.5	0.8	

※□ in the table indicates the cup material.
※ The weight value is when NBR（Nitrile rubber）selected.
※ aXb indicates A size of oval cup.

Top Port PFTK-5A/6A/8A

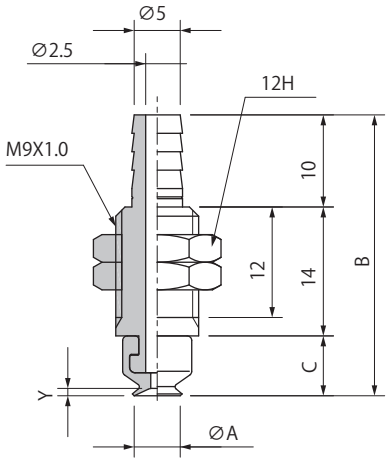

Model number	A	B	C	Y	Weight (g)
PFTK-5A-□	5	30.5	6.5	0.8	11
PFTK-6A-□	6				
PFTK-8A-□	8	31	7	1.2	

※□ in the table indicates the cup material.
※ The weight value is when NBR（Nitrile rubber）selected.

Top Port PFTK-10A

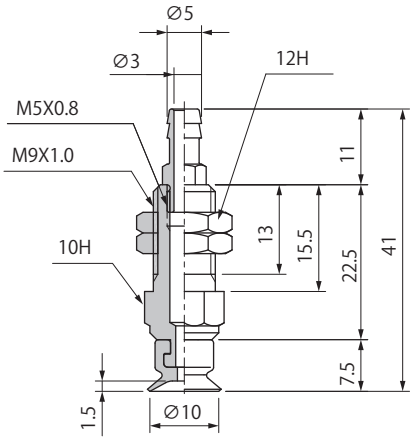

Model number	Weight (g)
PFTK-10A-□	15

※□ in the table indicates the cup material.
※ The weight value is when NBR（Nitrile rubber）selected.

Dimensions

(mm)

Top Port PFTK-15/20

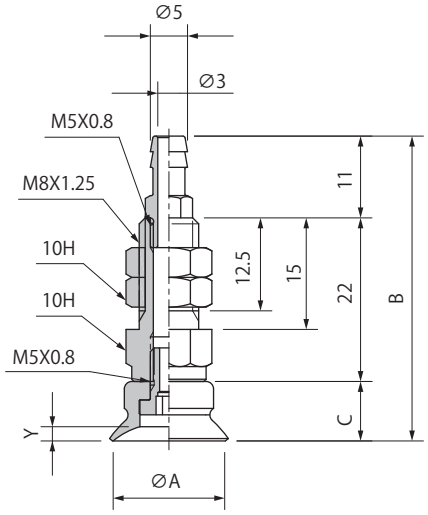

Model number	A	B	C	Y	Weight (g)
PFTK-15- □	15	41	8	1.9	20
PFTK-20- □	20	43	10	2.3	

※□ in the table indicates the cup material.
※ The weight value is when NBR（Nitrile rubber）selected.

Top Port PFTK-25/30/35/40/50

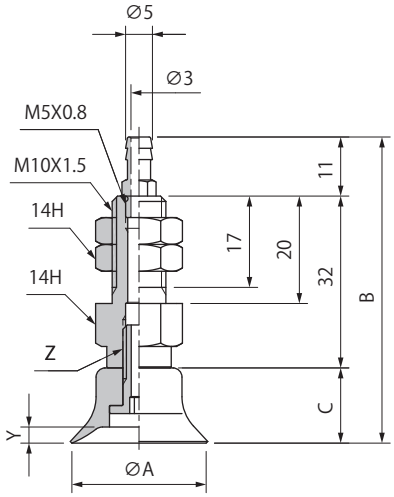

Model number	A	B	C	Y	Z	Weight (g)
PFTK-25- □	25	57	14	3.0	M6X1.0	40
PFTK-30- □	29	55	12	2.0		
PFTK-35- □	35	57	14	3.0		
PFTK-40- □	40			3.5		
PFTK-50- □	50	58	15	4.0	M8X1.25	50

※□ in the table indicates the cup material.
※ The weight value is when NBR（Nitrile rubber）selected.

Top Port PFTK-60/80/95

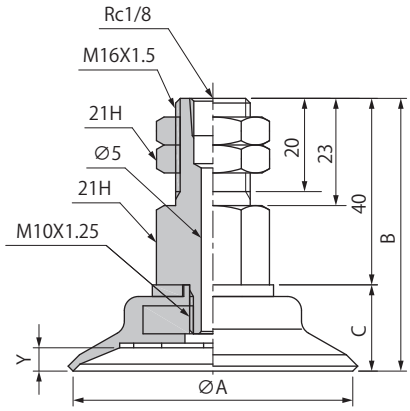

Model number	A	B	C	Y	Weight (g)
PFTK-60- □	60	58.5	18.5	5	130
PFTK-80- □	80	60.5	20.5	6.0	170
PFTK-95- □	93	61	21		220

※□ in the table indicates the cup material.
※ The weight value is when NBR（Nitrile rubber）selected.

PFTK•YK Cup with Fixed Fitting

Dimensions

(mm)

Side Port PFYK-1.5A/2A/3.5A

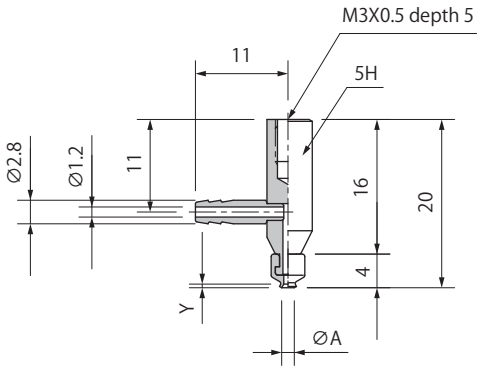

Model number	A	Y	Weight (g)
PFYK-1.5A- □	1.5	0.4	3
PFYK-2A- □	2		
PFYK-3.5A- □	3.5	0.5	

※□ in the table indicates the cup material.
※ The weight value is when NBR（Nitrile rubber）selected.

Side Port PFYK-2X4/3.5X7

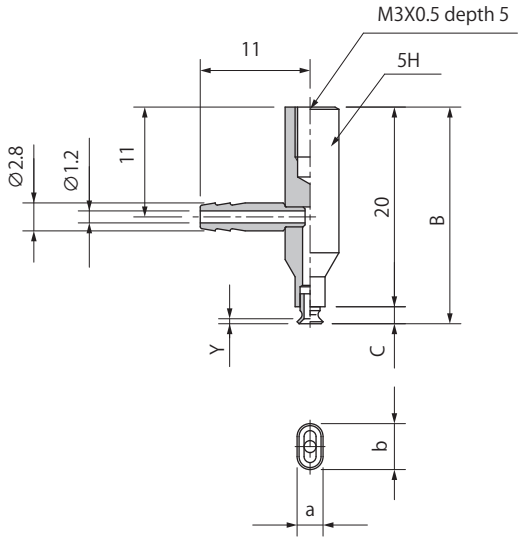

Model number	A	B	C	Y	Weight (g)
PFYK-2X4- □	2.2X4.2	21.7	1.7	0.5	3
PFYK-3.5X7- □	3.5X7	22.5	2.5	0.8	

※□ in the table indicates the cup material.
※ The weight value is when NBR（Nitrile rubber）selected.
※ aXb indicates A size of oval cup.

Side Port PFYK-5A/6A/8A/10A

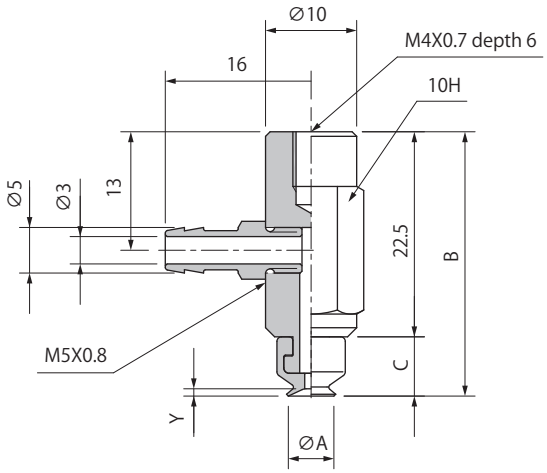

Model number	A	B	C	Y	Weight (g)
PFYK-5A- □	5	29	6.5	0.8	16
PFYK-6A- □	6				
PFYK-8A- □	8	29.5	7	1.2	
PFYK-10A- □	10	30	7.5	1.5	

※□ in the table indicates the cup material.
※ The weight value is when NBR（Nitrile rubber）selected.

Side Port PFYK-15/20

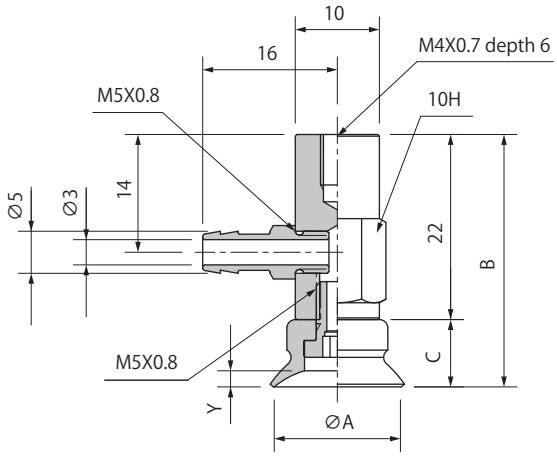

Model number	A	B	C	Y	Weight (g)
PFYK-15- □	15	30	8	1.9	20
PFYK-20- □	20	32	10	2.3	

※□ in the table indicates the cup material.
※ The weight value is when NBR（Nitrile rubber）selected.

Dimensions

(mm)

Side Port PFYK-25/30/35/40/50

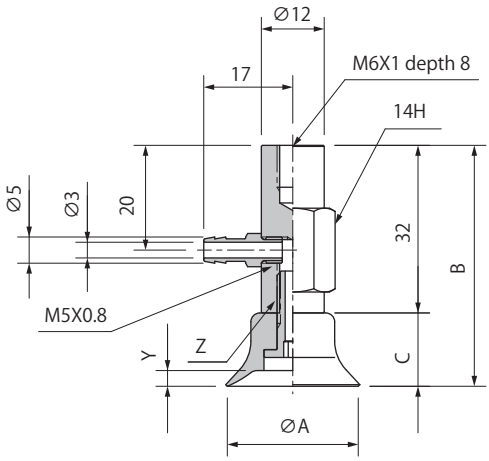

Model number	A	B	C	Y	Z	Weight (g)
PFYK-25-□	25	46	14	3.0	M6X0.1	40
PFYK-30-□	29	44	12	2.0		
PFYK-35-□	35	46	14	3.0		
PFYK-40-□	40			3.5		50
PFYK-50-□	50	47	15	4.0	M8X1.25	55

※□ in the table indicates the cup material.
※ The weight value is when NBR（Nitrile rubber）selected.

Side Port PFYK-60/80/95

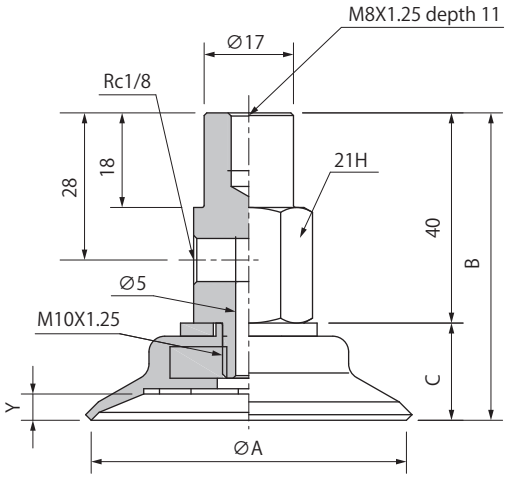

Model number	A	B	C	Y	Weight (g)
PFYK-60-□	60	58.5	18.5	5	120
PFYK-80-□	80	60.5	20.5	6.0	160
PFYK-95-□	93	61	21		210

※□ in the table indicates the cup material.
※ The weight value is when NBR（Nitrile rubber）selected.

Side Port PFYK-100

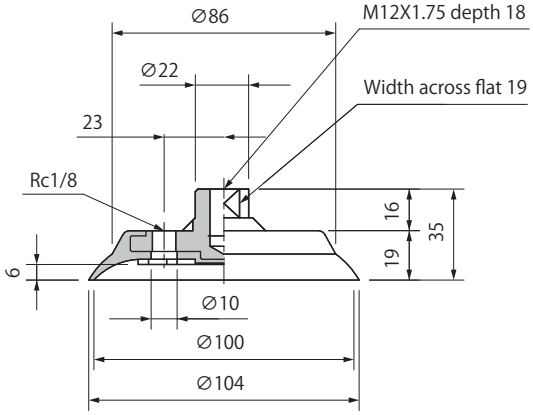

Model number	Weight (g)
PFYK-100-□	140

※□ in the table indicates the cup material.
※ The weight value is when NBR（Nitrile rubber）selected.

Side Port PFYK-120/150/200

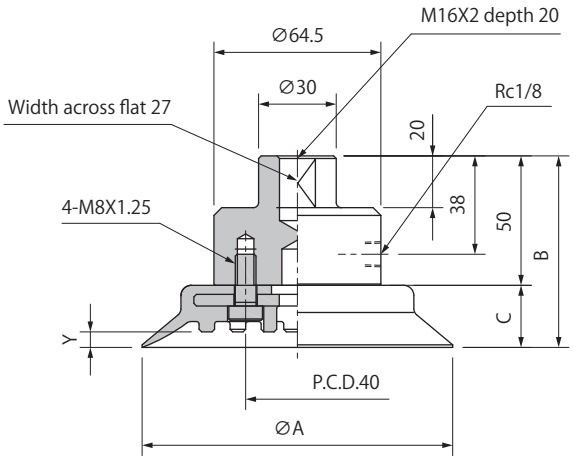

Model number	A	B	C	Y	Weight (g)
PFYK-120-□	120	74	24	6.0	640
PFYK-150-□	150	81	31	9.0	910
PFYK-200-□	200	86	36	13.0	1200

※□ in the table indicates the cup material.
※ The weight value is when NBR（Nitrile rubber）selected.

PSS Cup with Compact Spring Fitting

Simple construction of the cup and the fitting

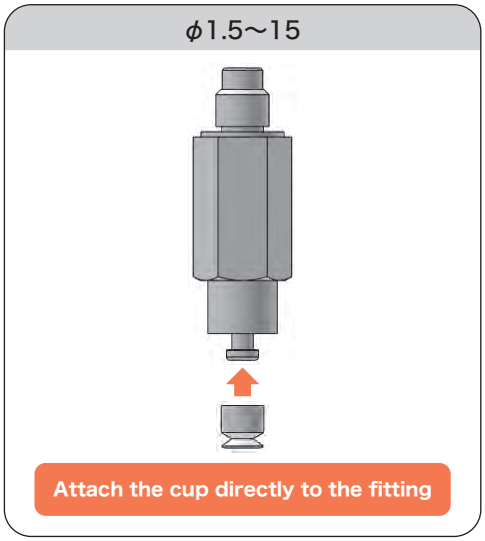

How to Order

PSS – S3 – PFG – 2A – N

① ② ③

①Stroke(mm)

Symbol	Length	Applicable cup size
S3	3	ϕ1.5～3.5
L3	3	ϕ5～15
S5	5	ϕ1.5～3.5
L5	5	ϕ5～15

②Cup Size(mm)

Symbol	Cup size
1.5A	ϕ1.5
2A	ϕ2
3.5A	ϕ3.5
5A	ϕ5
6A	ϕ6
8A	ϕ8
10A	ϕ10
15A	ϕ15

③Cup Rubber Material

Symbol	Material
N	NBR(Nitrile rubber)
S	Silicone rubber
U	Urethane rubber
F	Fluorine rubber
NE	Conductive NBR (Nitrile rubber)
SE	Conductive silicone rubber

※Please consult with us for other material.

Combination Table

Male Screw

Model number	Cup	Fitting	Piping specifications
PSS-S3-PFG-1.5A-□	PFG-1.5A-□	PSS-S3	M5X0.8 (Male)
PSS-S3-PFG-2A-□	PFG-2A-□		
PSS-S3-PFG-3.5A-□	PFG-3.5A-□		
PSS-L3-PFG-5A-□	PFG-5A-□	PSS-L3	
PSS-L3-PFG-6A-□	PFG-6A-□		
PSS-L3-PFG-8A-□	PFG-8A-□		
PSS-L3-PFG-10A-□	PFG-10A-□		
PSS-L3-PFG-15A-□	PFG-15A-□		
PSS-S5-PFG-1.5A-□	PFG-1.5A-□	PSS-S5	
PSS-S5-PFG-2A-□	PFG-2A-□		
PSS-S5-PFG-3.5A-□	PFG-3.5A-□		
PSS-L5-PFG-5A-□	PFG-5A-□	PSS-L5	
PSS-L5-PFG-6A-□	PFG-6A-□		
PSS-L5-PFG-8A-□	PFG-8A-□		
PSS-L5-PFG-10A-□	PFG-10A-□		
PSS-L5-PFG-15A-□	PFG-15A-□		

※□in the table indicates the cup material.

Spring Specifications

Cup size	Unit	ϕ1.5～15	
Stroke	mm	3	5
Spring load at 0 stroke	N	1.5	1.62
Spring load at full stroke	N	2.3	3.2
Tightening torque	N・m	0.58～0.68	

※Due to structural reason,「lift-up」may occur in case vacuum pressure is more than -65kPa.
The weight of non「lift-up」in horizontal lifting is about over 200g.
Screw must be tightened in recommended tightening torque, otherwise malfunction would occur.

Dimensions

(mm)

PSS-S3-1.5A/2A/3.5A

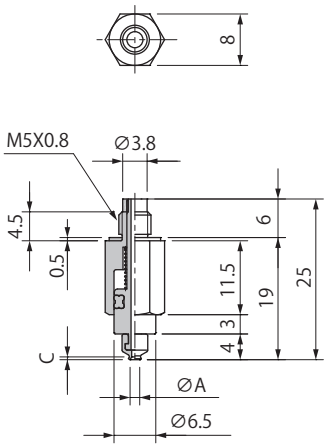

Model number	A	C	Weight (g)
PSS-S3-PFG-1.5A-□	1.5	0.4	5.5
PSS-S3-PFG-2A-□	2		
PSS-S3-PFG-3.5A-□	3.5	0.5	

※□ in the table indicates the cup material.
※ The weight value is when NBR（Nitrile rubber）selected.

PSS-L3-5A/6A

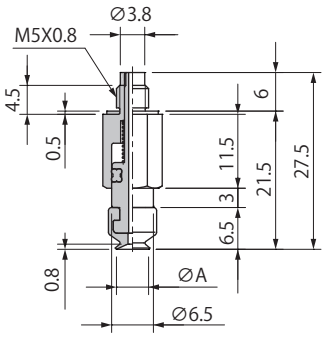

Model number	A	Weight (g)
PSS-L3-PFG-5A-□	5	6
PSS-L3-PFG-6A-□	6	

※□ in the table indicates the cup material.
※ The weight value is when NBR(Nitrile rubber）selected.

PSS-L3-8A/10A/15A

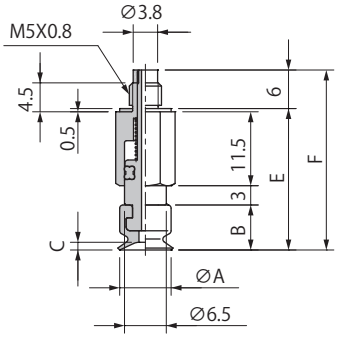

Model number	A	B	C	E	F	Weight (g)
PSS-L3-PFG-8A-□	8	7	1.2	22	28	6
PSS-L3-PFG-10A-□	10	7.5	1.5	22.5	28.5	10
PSS-L3-PFG-15A-□	15	8	2	23	29	

※□ in the table indicates the cup material.
※ The weight value is when NBR（Nitrile rubber）selected.

PSS-S5-1.5A/2A/3.5A

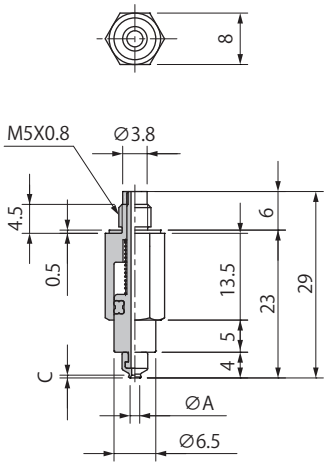

Model number	A	C	Weight (g)
PSS-S5-PFG-1.5A-□	1.5	0.4	6.5
PSS-S5-PFG-2A-□	2		
PSS-S5-PFG-3.5A-□	3.5	0.5	

※□ in the table indicates the cup material.
※ The weight value is when NBR（Nitrile rubber）selected.

PSS-L5-5A/6A

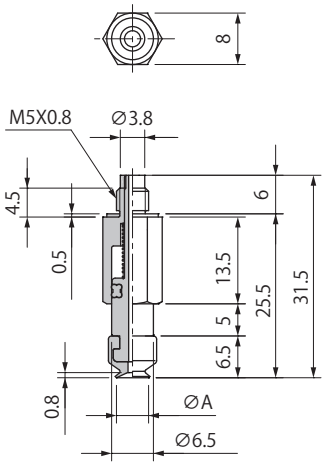

Model number	A	Weight (g)
PSS-L5-PFG-5A-□	5	7
PSS-L5-PFG-6A-□	6	

※□ in the table indicates the cup material.
※ The weight value is when NBR(Nitrile rubber）selected.

PSS-L5-8A/10A/15A

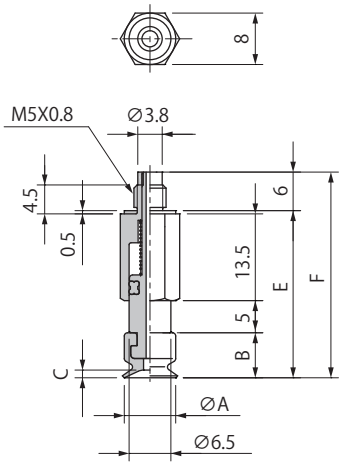

Model number	A	B	C	E	F	Weight (g)
PSS-L3-PFG-8A-□	8	7	1.2	26	32	7
PSS-L3-PFG-10A-□	10	7.5	1.5	26.5	32.5	11
PSS-L3-PFG-15A-□	15	8	2	27	33	

※□ in the table indicates the cup material.
※ The weight value is when NBR（Nitrile rubber）selected.

NAPFTS•YS Cup with Spring Fitting

Consisting of fitting, setting screw, suction cup.

ϕ1.5~15

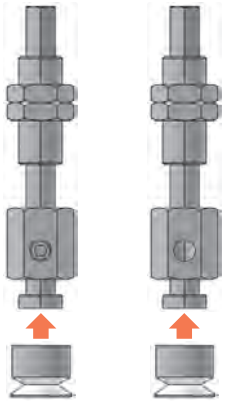

Attach the cup directly to the fitting

ϕ20~50

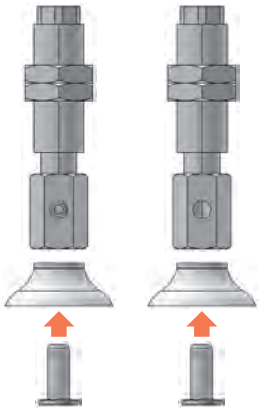

Attach the cup to the fitting with setting screw

ϕ60~200

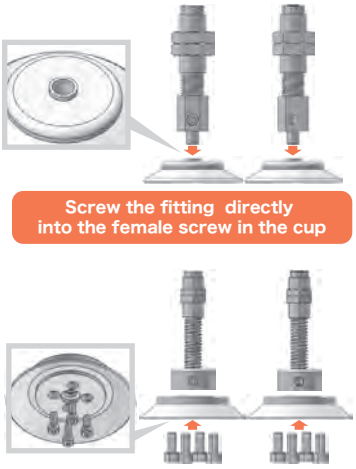

Screw the fitting directly into the female screw in the cup

ϕ120 ~ 200 Mounting by bolts those are attached to the fitting

How to Order

NAPF **T** S – **2A-3** – **N** – **T**

① ② ③ ④

①Vacuum Port

T	Top
Y	Side

②Cup Size - Stroke(mm)

Symbol	Cup size Stroke	Symbol	Cup size Stroke	Symbol	Cup size Stroke
1.5A-3	ϕ1.5-3	20B-6	ϕ20-6	60-10	ϕ60-10
1.5A-6	ϕ1.5-6	20B-15	ϕ20-15	60-30	ϕ60-30
2A-3	ϕ2-3	20B-30	ϕ20-30	60-50	ϕ60-50
2A-6	ϕ2-6	25-6	ϕ25-6	80-10	ϕ80-10
3.5A-3	ϕ3.5-3	25-15	ϕ25-15	80-30	ϕ80-30
3.5A-6	ϕ3.5-6	25-30	ϕ25-30	80-50	ϕ80-50
5A-3	ϕ5-3	30-6	ϕ30-6	95-10	ϕ95-10
5A-6	ϕ5-6	30-15	ϕ30-15	95-30	ϕ95-30
6A-3	ϕ6-3	30-30	ϕ30-30	95-50	ϕ95-50
6A-6	ϕ6-6	35-6	ϕ35-6	120-20	ϕ120-20
8A-3	ϕ8-3	35-15	ϕ35-15	120-50	ϕ120-50
8A-6	ϕ8-6	35-30	ϕ35-30	150-20	ϕ150-20
10A-3	ϕ10-3	40-6	ϕ40-6	150-50	ϕ150-50
10A-10	ϕ10-10	40-15	ϕ40-15	200-20	ϕ200-20
10A-15	ϕ10-15	40-30	ϕ40-30	200-50	ϕ200-50
15A-3	ϕ15-3	50-6	ϕ50-6		
15A-10	ϕ15-10	50-15	ϕ50-15		
15A-15	ϕ15-15	50-30	ϕ50-30		

④Connector

Blank	N/A
T	Barb
O	Push-in

※ϕ60 or more can not be selected "T" and "O"

③Cup Rubber Material

Symbol	Material
N	NBR(Nitrile rubber)
S	Silicone rubber
U	Urethane rubber
F	Fluorine rubber
NE	Conductive NBR (Nitrile rubber)
SE	Conductive silicone rubber

※Please consult with us for other material.

Spring Specifications

Cup size	Unit	ϕ1.5~8		ϕ10, 15			ϕ20~50			ϕ60~95			ϕ120~200	
Stroke	mm	3	6	3	10	15	6	15	30	10	30	50	20	50
Spring load at 0 stroke	N	0.49		0.61		0.64	2.45		2.9	8.82	6.76	8.33	15.6	14.7
Spring load at full stroke	N	0.59	0.69	0.77	1.17		3.43	4.9	5.88	11.8	15.6	19.6	29.4	

Combination Table

Model number	Cup	Setting screw	Fitting	Piping specifications		
				Without connector・Blank	Barb connector・T	Push-in connector・O
NAPF○S-1.5A-3-□ (-T/O)	PFG-1.5A-□	Attach the cup directly to the fitting	NAPF○S-1.5A-3-K (-T/O)	M3X0.5 (Female)	ϕ4X2.5	
NAPF○S-1.5A-6-□ (-T/O)			NAPF○S-1.5A-6-K (-T/O)			
NAPF○S-2A-3-□ (-T/O)	PFG-2A-□		NAPF○S-1.5A-3-K (-T/O)			
NAPF○S-2A-6-□ (-T/O)			NAPF○S-1.5A-6-K (-T/O)			
NAPF○S-3.5A-3-□ (-T/O)	PFG-3.5A-□		NAPF○S-1.5A-3-K (-T/O)			
NAPF○S-3.5A-6-□ (-T/O)			NAPF○S-1.5A-6-K (-T/O)			
NAPF○S-5A-3-□ (-T/O)	PFG-5A-□		NAPF○S-5A-3-K (-T/O)			
NAPF○S-5A-6-□ (-T/O)			NAPF○S-5A-6-K (-T/O)			
NAPF○S-6A-3-□ (-T/O)	PFG-6A-□		NAPF○S-5A-3-K (-T/O)			
NAPF○S-6A-6-□ (-T/O)			NAPF○S-5A-6-K (-T/O)			
NAPF○S-8A-3-□ (-T/O)	PFG-8A-□		NAPF○S-5A-3-K (-T/O)			
NAPF○S-8A-6-□ (-T/O)			NAPF○S-5A-6-K (-T/O)			
NAPF○S-10A-3-□ (-T/O)	PFG-10A-□		NAPF○S-10A-3-K (-T/O)	M5X0.8 (Female)	ϕ6X4	
NAPF○S-10A-10-□ (-T/O)			NAPF○S-10A-10-K (-T/O)			
NAPF○S-10A-15-□ (-T/O)			NAPF○S-10A-15-K (-T/O)			
NAPF○S-15A-3-□ (-T/O)	PFG-15A-□		NAPF○S-10A-3-K (-T/O)			
NAPF○S-15A-10-□ (-T/O)			NAPF○S-10A-10-K (-T/O)			
NAPF○S-15A-15-□ (-T/O)			NAPF○S-10A-15-K (-T/O)			
NAPF○S-20B-6-□ (-T/O)	PFG-20B-□	TN-PF-25-M6	NAPF○S-20B-6-K (-T/O)			
NAPF○S-20B-15-□ (-T/O)			NAPF○S-20B-15-K (-T/O)			
NAPF○S-20B-30-□ (-T/O)			NAPF○S-20B-30-K (-T/O)			
NAPF○S-25-6-□ (-T/O)	PFG-25-□		NAPF○S-20B-6-K (-T/O)			
NAPF○S-25-15-□ (-T/O)			NAPF○S-20B-15-K (-T/O)			
NAPF○S-25-30-□ (-T/O)			NAPF○S-20B-30-K (-T/O)			
NAPF○S-30-6-□ (-T/O)	PFG-30-□		NAPF○S-20B-6-K (-T/O)			
NAPF○S-30-15-□ (-T/O)			NAPF○S-20B-15-K (-T/O)			
NAPF○S-30-30-□ (-T/O)			NAPF○S-20B-30-K (-T/O)			
NAPF○S-35-6-□ (-T/O)	PFG-35-□		NAPF○S-20B-6-K (-T/O)			
NAPF○S-35-15-□ (-T/O)			NAPF○S-20B-15-K (-T/O)			
NAPF○S-35-30-□ (-T/O)			NAPF○S-20B-30-K (-T/O)			
NAPF○S-40-6-□ (-T/O)	PFG-40-□		NAPF○S-20B-6-K (-T/O)			
NAPF○S-40-15-□ (-T/O)			NAPF○S-20B-15-K (-T/O)			
NAPF○S-40-30-□ (-T/O)			NAPF○S-20B-30-K (-T/O)			
NAPF○S-50-6-□ (-T/O)	PFG-50-□	TN-PF-50-M6	NAPF○S-20B-6-K (-T/O)			
NAPF○S-50-15-□ (-T/O)			NAPF○S-20B-15-K (-T/O)			
NAPF○S-50-30-□ (-T/O)			NAPF○S-20B-30-K (-T/O)			
NAPF○S-60-10-□	PFG-60-□	Screw the fitting directly into the female screw in the cup	NAPF○S-60-10-K	Rc1/8 (Female)	-	
NAPF○S-60-30-□			NAPF○S-60-30-K			
NAPF○S-60-50-□			NAPF○S-60-50-K			
NAPF○S-80-10-□	PFG-80-□		NAPF○S-60-10-K			
NAPF○S-80-30-□			NAPF○S-60-30-K			
NAPF○S-80-50-□			NAPF○S-60-50-K			
NAPF○S-95-10-□	PFG-95-□		NAPF○S-60-10-K			
NAPF○S-95-30-□			NAPF○S-60-30-K			
NAPF○S-95-50-□			NAPF○S-60-50-K			
NAPF○S-120-20-□	PFG-120-□	Mounting by bolts(4 pieces) those are attached to the fitting	NAPF○S-120-20-K	Rc1/4 (Female)	-	
NAPF○S-120-50-□			NAPF○S-120-50-K			
NAPF○S-150-20-□	PFG-150-□		NAPF○S-120-20-K			
NAPF○S-150-50-□			NAPF○S-120-50-K			
NAPF○S-200-20-□	PFG-200-□		NAPF○S-120-20-K			
NAPF○S-200-50-□			NAPF○S-120-50-K			

※□in the table indicates the cup material.
※○in the table indicates the vacuum port (T or Y).
※The mounting torque of the H8 nut for NAPF○S-1.5A/5A-3/6-K (-T/O) should be 2.0N・m or less.

NAPFTS•YS Cup with Spring Fitting

Dimensions

(mm)

NAPFT/YS-1.5A

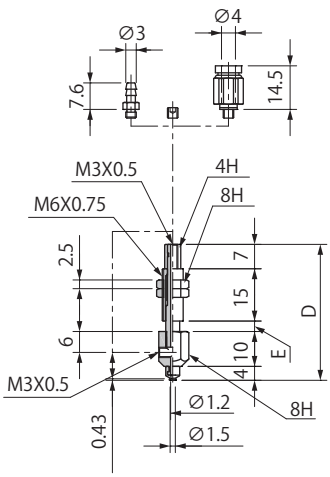

Model number	D	E	Weight (g)
NAPFT/YS-1.5A-3-□(-T/O)	39	3	6
NAPFT/YS-1.5A-6-□(-T/O)	42	6	

※□ in the table indicates the cup material.
※ The weight value is when NBR (Nitrile rubber) / without connector selected.

NAPFT/YS-2A/3.5A

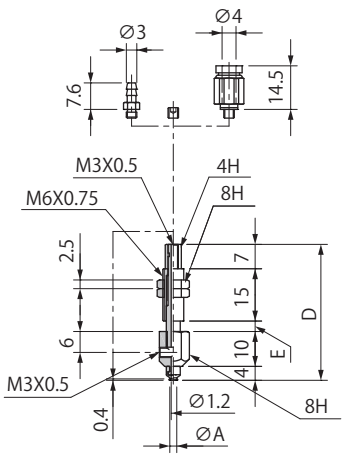

Model number	A	D	E	Weight (g)
NAPFT/YS-2A-3-□ (-T/O)	2	39	3	6
NAPFT/YS-2A-6-□ (-T/O)		42	6	
NAPFT/YS-3.5A-3-□(-T/O)	3.5	39	3	
NAPFT/YS-3.5A-6-□(-T/O)		42	6	

※□ in the table indicates the cup material.
※ The weight value is when NBR (Nitrile rubber) / without connector selected.

NAPFT/YS-5A/6A

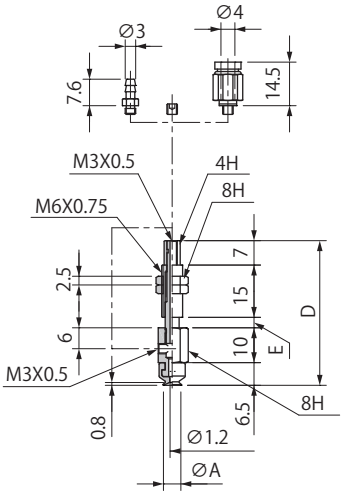

Model number	A	D	E	Weight (g)
NAPFT/YS-5A-3-□ (-T/O)	5	41.5	3	7
NAPFT/YS-5A-6-□ (-T/O)		44.5	6	
NAPFT/YS-6A-3-□ (-T/O)	6	41.5	3	
NAPFT/YS-6A-6-□ (-T/O)		44.5	6	

※□ in the table indicates the cup material.
※ The weight value is when NBR (Nitrile rubber) / without connector selected.

NAPFT/YS-8A

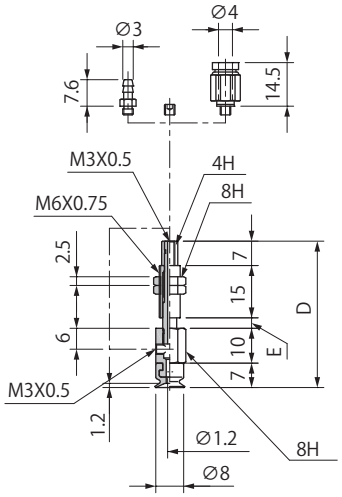

Model number	D	E	Weight (g)
NAPFT/YS-8A-3-□ (-T/O)	42	3	7
NAPFT/YS-8A-6-□ (-T/O)	45	6	

※□ in the table indicates the cup material.
※ The weight value is when NBR (Nitrile rubber) / without connector selected.

NAPFT/YS-10A

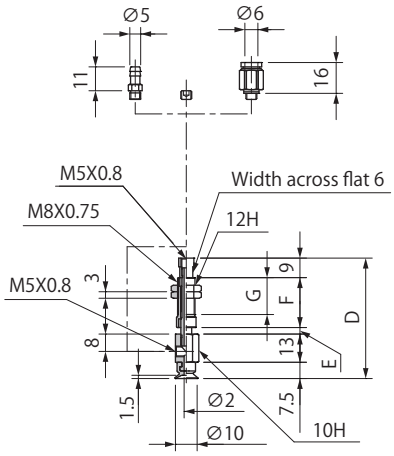

Model number	D	E	F	G	Weight (g)
NAPFT/YS-10A-3-□ (-T/O)	55.5	3	23	17	18
NAPFT/YS-10A-10-□ (-T/O)	62.5	10			18.5
NAPFT/YS-10A-15-□ (-T/O)	75	15	30.5	24.5	21

※□ in the table indicates the cup material.
※ The weight value is when NBR (Nitrile rubber) / without connector selected.

NAPFT/YS-15A

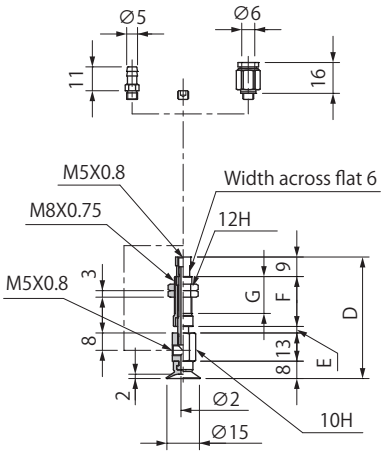

Model number	D	E	F	G	Weight (g)
NAPFT/YS-15A-3-□ (-T/O)	56	3	23	17	18
NAPFT/YS-15A-10-□ (-T/O)	63	10			18.5
NAPFT/YS-15A-15-□ (-T/O)	75.5	15	30.5	24.5	21

※□ in the table indicates the cup material.
※ The weight value is when NBR (Nitrile rubber) / without connector selected.

Common Specifications

Connector Weight(g)

Symbol	Tube O.D ϕ 4	Tube O.D ϕ 6
T	0.5	1.5
O	3.0	4.0

Dimensions

(mm)

NAPFT/YS-20B

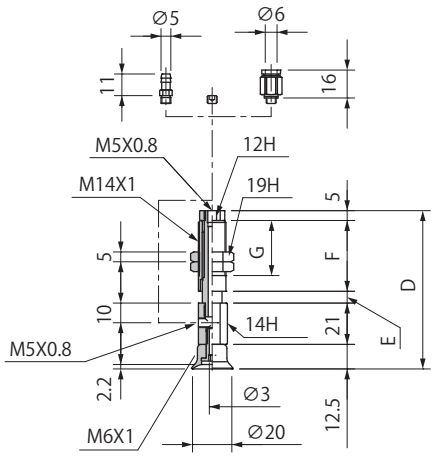

Model number	D	E	F	G	Weight (g)
NAPFT/YS-20B-6-□ (-T/O)	80.5	6	36	28	65.5
NAPFT/YS-20B-15-□ (-T/O)	89.5	15			70.5
NAPFT/YS-20B-30-□ (-T/O)	126.5	30	58	50	95.5

※□ in the table indicates the cup material.
※ The weight value is when NBR（Nitrile rubber）/ without connector selected.

NAPFT/YS-25

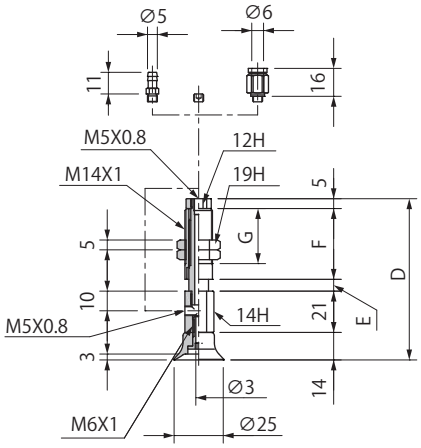

Model number	D	E	F	G	Weight (g)
NAPFT/YS-25-6-□ (-T/O)	82	6	36	28	66
NAPFT/YS-25-15-□ (-T/O)	91	15			71
NAPFT/YS-25-30-□ (-T/O)	128	30	58	50	96

※□ in the table indicates the cup material.
※ The weight value is when NBR（Nitrile rubber）/ without connector selected.

NAPFT/YS-30

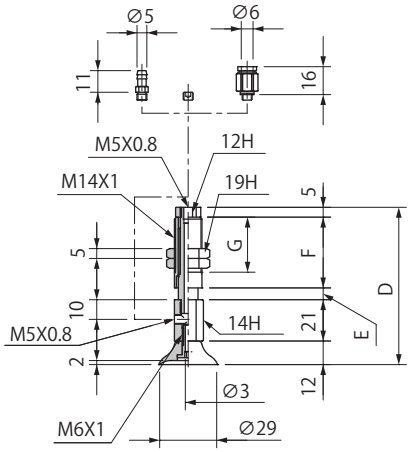

Model number	D	E	F	G	Weight (g)
NAPFT/YS-30-6-□ (-T/O)	80	6	36	28	67
NAPFT/YS-30-15-□ (-T/O)	89	15			72
NAPFT/YS-30-30-□ (-T/O)	126	30	58	50	97

※□ in the table indicates the cup material.
※ The weight value is when NBR（Nitrile rubber）/ without connector selected.

NAPFT/YS-35

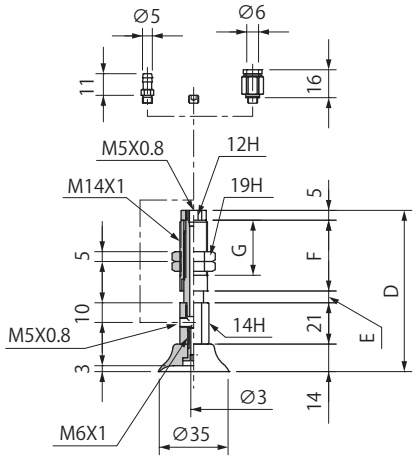

Model number	D	E	F	G	Weight (g)
NAPFT/YS-35-6-□ (-T/O)	82	6	36	28	69.5
NAPFT/YS-35-15-□ (-T/O)	91	15			74.5
NAPFT/YS-35-30-□ (-T/O)	128	30	58	50	99.5

※□ in the table indicates the cup material.
※ The weight value is when NBR（Nitrile rubber）/ without connector selected.

Common Specifications

Connector Weight(g)

Symbol	Tube O.D ϕ 6
T	1.5
O	4.0

NAPFTS•YS Cup with Spring Fitting

Dimensions

(mm)

NAPFT/YS-40

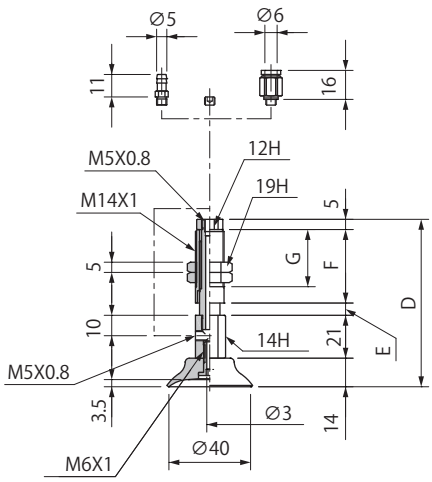

Model number	D	E	F	G	Weight (g)
NAPFT/YS-40-6-□ (-T/O)	82	6	36	28	71
NAPFT/YS-40-15-□(-T/O)	91	15			76
NAPFT/YS-40-30-□(-T/O)	128	30	58	50	101

※□ in the table indicates the cup material.
※ The weight value is when NBR (Nitrile rubber) / without connector selected.

NAPFT/YS-50

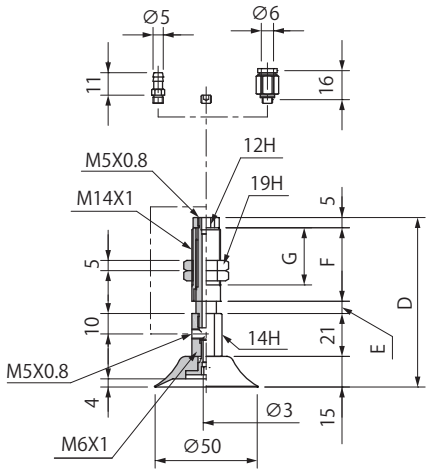

Model number	D	E	F	G	Weight (g)
NAPFT/YS-50-6-□ (-T/O)	83	6	36	28	80
NAPFT/YS-50-15-□ (-T/O)	92	15			85
NAPFT/YS-50-30-□ (-T/O)	129	30	58	50	110

※□ in the table indicates the cup material.
※ The weight value is when NBR (Nitrile rubber) / without connector selected.

NAPFT/YS-60

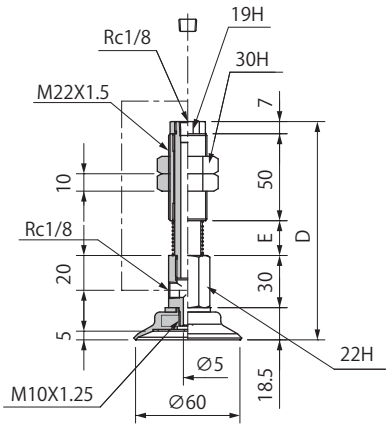

Model number	D	E	Weight (g)
NAPFT/YS-60-10-□	125.5	20	282.5
NAPFT/YS-60-30-□	155.5	50	316.5
NAPFT/YS-60-50-□	180.5	75	343.5

※□ in the table indicates the cup material.
※ The weight value is when NBR (Nitrile rubber) selected.

NAPFT/YS-80

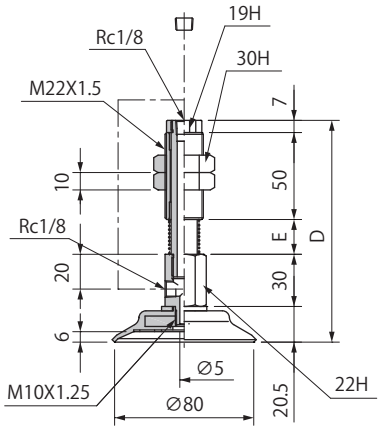

Model number	D	E	Weight (g)
NAPFT/YS-80-10-□	127.5	20	310.5
NAPFT/YS-80-30-□	157.5	50	344.5
NAPFT/YS-80-50-□	182.5	75	371.5

※□ in the table indicates the cup material.
※ The weight value is when NBR (Nitrile rubber) selected.

Common Specifications

Connector Weight(g)

Symbol	Tube O.D ϕ 6
T	1.5
O	4.0

Dimensions

(mm)

NAPFT/YS-95

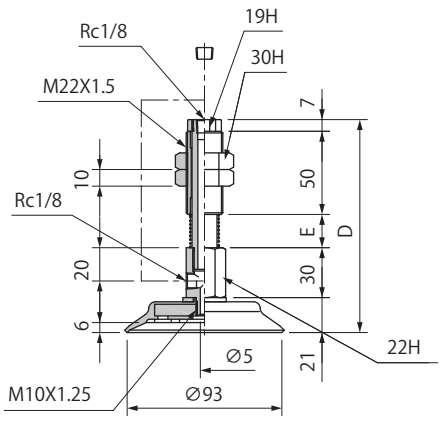

Model number	D	E	Weight (g)
NAPFT/YS-95-10-□	128	20	350.5
NAPFT/YS-95-30-□	158	50	384.5
NAPFT/YS-95-50-□	182	75	411.5

※□ in the table indicates the cup material.
※ The weight value is when NBR（Nitrile rubber）selected.

NAPFT/YS-120

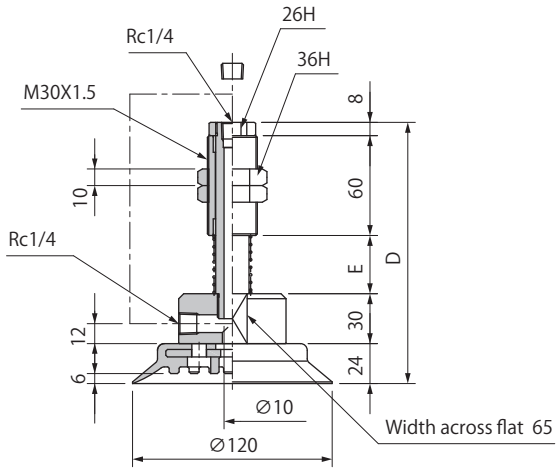

Model number	D	E	Weight (g)
NAPFT/YS-120-20-□	157	35	1165
NAPFT/YS-120-50-□	197	75	1246

※□ in the table indicates the cup material.
※ The weight value is when NBR（Nitrile rubber）selected.

NAPFT/YS-150

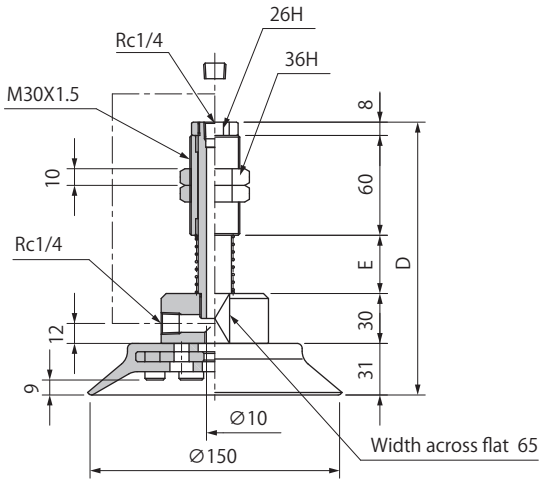

Model number	D	E	Weight (g)
NAPFT/YS-150-20-□	164	35	1389
NAPFT/YS-150-50-□	204	75	1470

※□ in the table indicates the cup material.
※ The weight value is when NBR（Nitrile rubber）selected.

NAPFT/YS-200

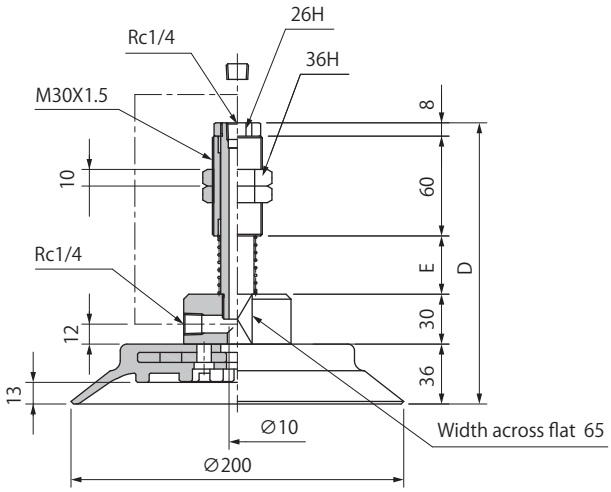

Model number	D	E	Weight (g)
NAPFT/YS-200-20-□	169	35	1755
NAPFT/YS-200-50-□	209	75	1836

※□ in the table indicates the cup material.
※ The weight value is when NBR（Nitrile rubber）selected.

Common Specifications

Connector Weight(g)

Symbol	Tube O.D ϕ 6
T	1.5
O	4.0

NAPFTH·YH Cup with Non-rotation Spring Fitting

Consisting of fitting, setting screw, suction cup.

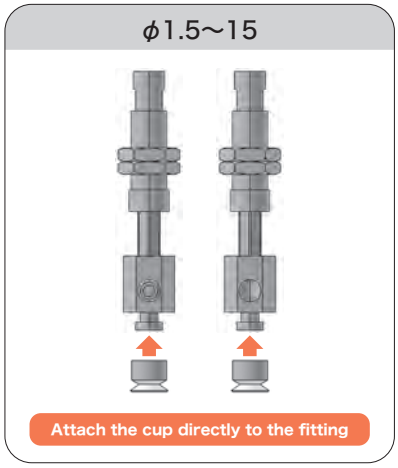

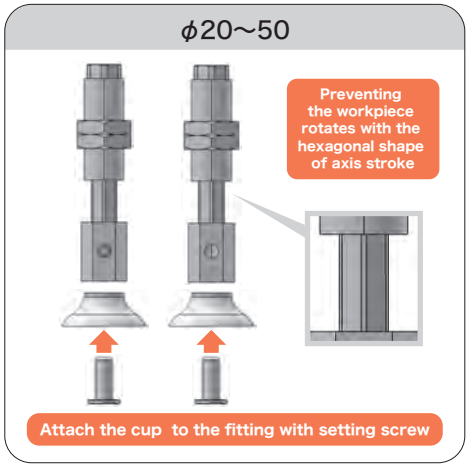

How to Order

NAPF **T** H – **2A-3** – **N** – **T**

① ② ③ ④

① Vacuum port

T	Top
Y	Side

② Cup Size - Stroke (mm)

Symbol	Cup size Stroke	Symbol	Cup size Stroke	Symbol	Cup size Stroke
1.5A-3	ϕ1.5-3	6A-3	ϕ6-3	30-6	ϕ30-6
1.5A-10	ϕ1.5-10	6A-10	ϕ6-10	30-15	ϕ30-15
1.5A-15	ϕ1.5-15	6A-15	ϕ6-15	30-30	ϕ30-30
2A-3	ϕ2-3	8A-3	ϕ8-3	35-6	ϕ35-6
2A-10	ϕ2-10	8A-10	ϕ8-10	35-15	ϕ35-15
2A-15	ϕ2-15	8A-15	ϕ8-15	35-30	ϕ35-30
3.5A-3	ϕ3.5-3	10A-3	ϕ10-3	40-6	ϕ40-6
3.5A-10	ϕ3.5-10	10A-10	ϕ10-10	40-15	ϕ40-15
3.5A-15	ϕ3.5-15	10A-15	ϕ10-15	40-30	ϕ40-30
2X4A-3	2X4-3 Note	15A-3	ϕ15-3	50-6	ϕ50-6
2X4A-10	2X4-10 Note	15A-10	ϕ15-10	50-15	ϕ50-15
2X4A-15	2X4-15 Note	15A-15	ϕ15-15	50-30	ϕ50-30
3.5X7A-3	3.5X7-3 Note	20B-6	ϕ20-6		
3.5X7A-10	3.5X7-10 Note	20B-15	ϕ20-15		
3.5X7A-15	3.5X7-15 Note	20B-30	ϕ20-30		
5A-3	ϕ5-3	25-6	ϕ25-6		
5A-10	ϕ5-10	25-15	ϕ25-15		
5A-15	ϕ5-15	25-30	ϕ25-30		

Note) Oval cup.

④ Connector

Blank	N/A
T	Barb
O	Push-in

③ Cup Rubber Material

Symbol	Material
N	NBR(Nitrile rubber)
S	Silicone rubber
U	Urethane rubber
F	Fluorine rubber
NE	Conductive NBR (Nitrile rubber)
SE	Conductive silicone rubber

※ Please consult with us for other material.

Spring Specifications

Cup size	Unit	ϕ1.5~3.5X7			ϕ5~15			ϕ20~50		
Stroke	mm	3	10	15	3	10	15	6	15	30
Spring load at 0 stroke	N	0.27		0.29	0.61		0.64	2.45		2.9
Spring load at full stroke	N	0.43	0.82	0.83	0.77	1.17		3.43	4.9	5.88

Combination Table

Model number	Cup	Setting screw	Fitting	Piping specifications		
				Without connector・Blank	Barb connector・T	Push-in connector・O
NAPF○H-1.5A-3-□ (-T/O)	PFG-1.5A-□	Attach the cup directly to the fitting	NAPF○H-1.5A-3-K (-T/O)	M3X0.5 (Female)	ϕ4X2.5	
NAPF○H-1.5A-10-□ (-T/O)			NAPF○H-1.5A-10-K (-T/O)			
NAPF○H-1.5A-15-□ (-T/O)			NAPF○H-1.5A-15-K (-T/O)			
NAPF○H-2A-3-□ (-T/O)	PFG-2A-□		NAPF○H-1.5A-3-K (-T/O)			
NAPF○H-2A-10-□ (-T/O)			NAPF○H-1.5A-10-K (-T/O)			
NAPF○H-2A-15-□ (-T/O)			NAPF○H-1.5A-15-K (-T/O)			
NAPF○H-3.5A-3-□ (-T/O)	PFG-3.5A-□		NAPF○H-1.5A-3-K (-T/O)			
NAPF○H-3.5A-10-□ (-T/O)			NAPF○H-1.5A-10-K (-T/O)			
NAPF○H-3.5A-15-□ (-T/O)			NAPF○H-1.5A-15-K (-T/O)			
NAPF○H-2X4A-3-□ (-T/O)	PFG-2X4A-□		NAPF○H-2X4A-3-K (-T/O)			
NAPF○H-2X4A-10-□ (-T/O)			NAPF○H-2X4A-10-K (-T/O)			
NAPF○H-2X4A-15-□ (-T/O)			NAPF○H-2X4A-15-K (-T/O)			
NAPF○H-3.5X7A-3-□ (-T/O)	PFG-3.5X7A-□		NAPF○H-2X4A-3-K (-T/O)			
NAPF○H-3.5X7A-10-□ (-T/O)			NAPF○H-2X4A-10-K (-T/O)			
NAPF○H-3.5X7A-15-□ (-T/O)			NAPF○H-2X4A-15-K (-T/O)			
NAPF○H-5A-3-□ (-T/O)	PFG-5A-□		NAPF○H-5A-3-K (-T/O)	M5X0.8 (Female)	ϕ6X4	
NAPF○H-5A-10-□ (-T/O)			NAPF○H-5A-10-K (-T/O)			
NAPF○H-5A-15-□ (-T/O)			NAPF○H-5A-15-K (-T/O)			
NAPF○H-6A-3-□ (-T/O)	PFG-6A-□		NAPF○H-5A-3-K (-T/O)			
NAPF○H-6A-10-□ (-T/O)			NAPF○H-5A-10-K (-T/O)			
NAPF○H-6A-15-□ (-T/O)			NAPF○H-5A-15-K (-T/O)			
NAPF○H-8A-3-□ (-T/O)	PFG-8A-□		NAPF○H-5A-3-K (-T/O)			
NAPF○H-8A-10-□ (-T/O)			NAPF○H-5A-10-K (-T/O)			
NAPF○H-8A-15-□ (-T/O)			NAPF○H-5A-15-K (-T/O)			
NAPF○H-10A-3-□ (-T/O)	PFG-10A-□		NAPF○H-5A-3-K (-T/O)			
NAPF○H-10A-10-□ (-T/O)			NAPF○H-5A-10-K (-T/O)			
NAPF○H-10A-15-□ (-T/O)			NAPF○H-5A-15-K (-T/O)			
NAPF○H-15A-3-□ (-T/O)	PFG-15A-□		NAPF○H-5A-3-K (-T/O)			
NAPF○H-15A-10-□ (-T/O)			NAPF○H-5A-10-K (-T/O)			
NAPF○H-15A-15-□ (-T/O)			NAPF○H-5A-15-K (-T/O)			
NAPF○H-20B-6-□ (-T/O)	PFG-20B-□	TN-PF-25-M6	NAPF○H-20B-6-K (-T/O)			
NAPF○H-20B-15-□ (-T/O)			NAPF○H-20B-15-K (-T/O)			
NAPF○H-20B-30-□ (-T/O)			NAPF○H-20B-30-K (-T/O)			
NAPF○H-25-6-□ (-T/O)	PFG-25-□		NAPF○H-20B-6-K (-T/O)			
NAPF○H-25-15-□ (-T/O)			NAPF○H-20B-15-K (-T/O)			
NAPF○H-25-30-□ (-T/O)			NAPF○H-20B-30-K (-T/O)			
NAPF○H-30-6-□ (-T/O)	PFG-30-□		NAPF○H-20B-6-K (-T/O)			
NAPF○H-30-15-□ (-T/O)			NAPF○H-20B-15-K (-T/O)			
NAPF○H-30-30-□ (-T/O)			NAPF○H-20B-30-K (-T/O)			
NAPF○H-35-6-□ (-T/O)	PFG-35-□		NAPF○H-20B-6-K (-T/O)			
NAPF○H-35-15-□ (-T/O)			NAPF○H-20B-15-K (-T/O)			
NAPF○H-35-30-□ (-T/O)			NAPF○H-20B-30-K (-T/O)			
NAPF○H-40-6-□ (-T/O)	PFG-40-□		NAPF○H-20B-6-K (-T/O)			
NAPF○H-40-15-□ (-T/O)			NAPF○H-20B-15-K (-T/O)			
NAPF○H-40-30-□ (-T/O)			NAPF○H-20B-30-K (-T/O)			
NAPF○H-50-6-□ (-T/O)	PFG-50-□	TN-PF-50-M6	NAPF○H-20B-6-K (-T/O)			
NAPF○H-50-15-□ (-T/O)			NAPF○H-20B-15-K (-T/O)			
NAPF○H-50-30-□ (-T/O)			NAPF○H-20B-30-K (-T/O)			

※□in the table indicates the cup material.
※○in the table indicates the vacuum port (T or Y).

NAPFTH•YH Cup with Non-rotation Spring Fitting

Dimensions

(mm)

NAPFT/YH-1.5A

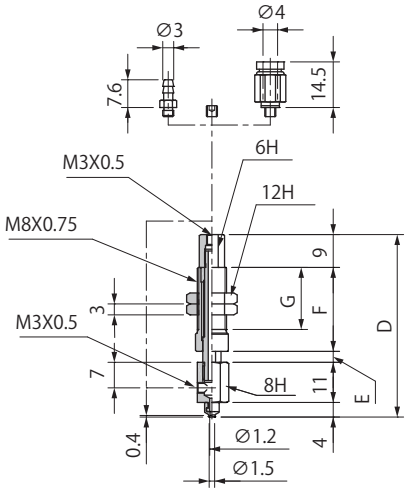

Model number	D	E	F	G	Weight (g)
NAPFT/YH-1.5A-3-□ (-T/O)	50	3	23	17	15.5
NAPFT/YH-1.5A-10-□ (-T/O)	57	10			17
NAPFT/YH-1.5A-15-□ (-T/O)	69.5	15	30.5	24.5	20

※□ in the table indicates the cup material.
※ The weight value is when NBR（Nitrile rubber）/ without connector selected.

NAPFT/YH-2A

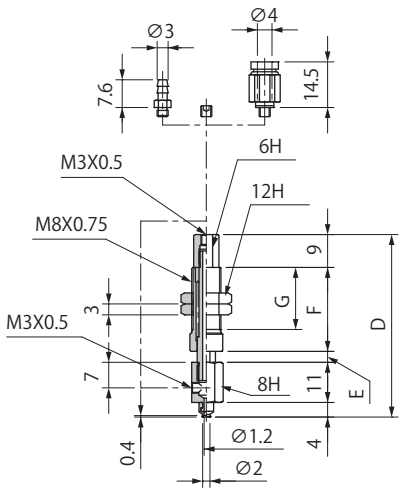

Model number	D	E	F	G	Weight (g)
NAPFT/YH-2A-3-□ (-T/O)	50	3	23	17	15.5
NAPFT/YH-2A-10-□ (-T/O)	57	10			17
NAPFT/YH-2A-15-□ (-T/O)	69.5	15	30.5	24.5	20

※□ in the table indicates the cup material.
※ The weight value is when NBR（Nitrile rubber）/ without connector selected.

NAPFT/YH-3.5A

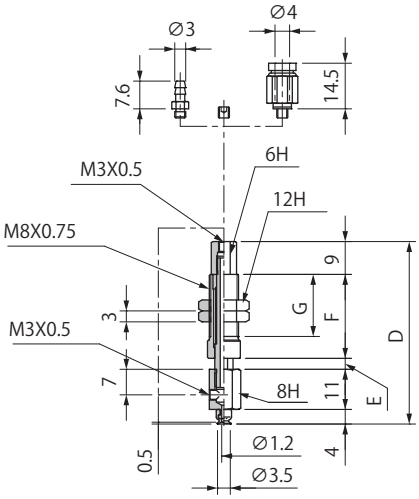

Model number	D	E	F	G	Weight (g)
NAPFT/YH-3.5A-3-□ (-T/O)	50	3	23	17	15.5
NAPFT/YH-3.5A-10-□ (-T/O)	57	10			17
NAPFT/YH-3.5A-15-□ (-T/O)	69.5	15	30.5	24.5	20

※□ in the table indicates the cup material.
※ The weight value is when NBR（Nitrile rubber）/ without connector selected.

NAPFT/YH-2X4A

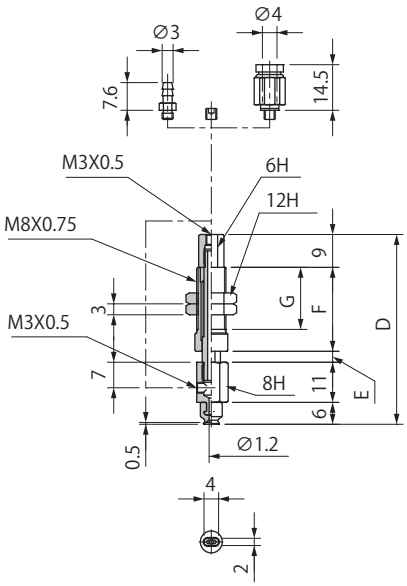

Model number	D	E	F	G	Weight (g)
NAPFT/YH-2X4A-3-□ (-T/O)	52	3	23	17	16.5
NAPFT/YH-2X4A-10-□ (-T/O)	59	10			17
NAPFT/YH-2X4A-15-□ (-T/O)	71.5	15	30.5	24.5	20

※□ in the table indicates the cup material.
※ The weight value is when NBR（Nitrile rubber）/ without connector selected.

Common Specifications

Connector Weight(g)

Symbol	Tube O.D ϕ 4
T	0.5
O	3.0

Dimensions

(mm)

NAPFT/YH-3.5X7A

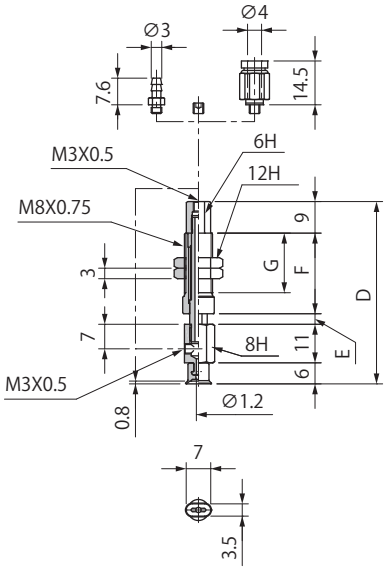

Model number	D	E	F	G	Weight (g)
NAPFT/YH-3.5X7A-3-□ (-T/O)	52	3	23	17	16.5
NAPFT/YH-3.5X7A-10-□ (-T/O)	59	10			17
NAPFT/YH-3.5X7A-15-□ (-T/O)	71.5	15	30.5	24.5	20

※□ in the table indicates the cup material.
※ The weight value is when NBR（Nitrile rubber）/ without connector selected.

NAPFT/YH-5A

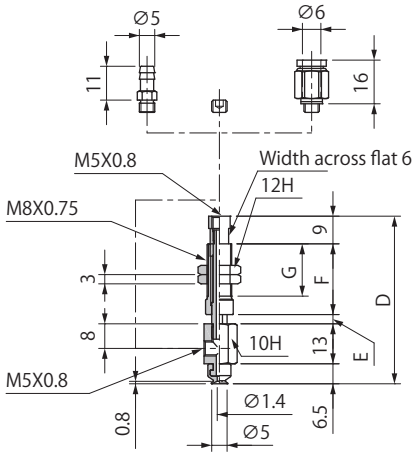

Model number	D	E	F	G	Weight (g)
NAPFT/YH-5A-3-□ (-T/O)	54.5	3	23	17	18
NAPFT/YH-5A-10-□ (-T/O)	61.5	10			18.5
NAPFT/YH-5A-15-□ (-T/O)	74	15	30.5	24.5	21.5

※□ in the table indicates the cup material.
※ The weight value is when NBR（Nitrile rubber）/ without connector selected.

NAPFT/YH-6A

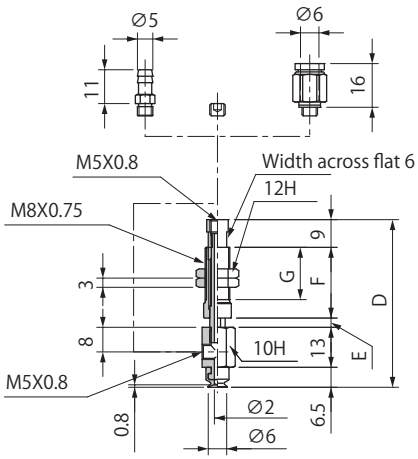

Model number	D	E	F	G	Weight (g)
NAPFT/YH-6A-3-□ (-T/O)	54.5	3	23	17	18
NAPFT/YH-6A-10-□ (-T/O)	61.5	10			18.5
NAPFT/YH-6A-15-□ (-T/O)	74	15	30.5	24.5	21.5

※□ in the table indicates the cup material.
※ The weight value is when NBR（Nitrile rubber）/ without connector selected.

NAPFT/YH-8A

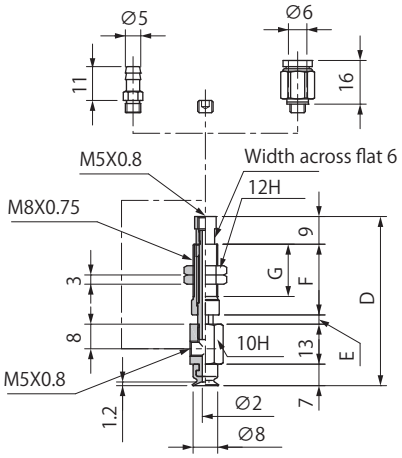

Model number	D	E	F	G	Weight (g)
NAPFT/YH-8A-3-□ (-T/O)	55	3	23	17	18
NAPFT/YH-8A-10-□ (-T/O)	62	10			18.5
NAPFT/YH-8A-15-□ (-T/O)	74.5	15	30.5	24.5	21.5

※□ in the table indicates the cup material.
※ The weight value is when NBR（Nitrile rubber）/ without connector selected.

Common Specifications

Connector Weight(g)

Symbol	Tube O.D ϕ 4	Tube O.D ϕ 6
T	0.5	1.5
O	3.0	4.0

NAPFTH•YH Cup with Non-rotation Spring Fitting

Dimensions

(mm)

NAPFT/YH-10A

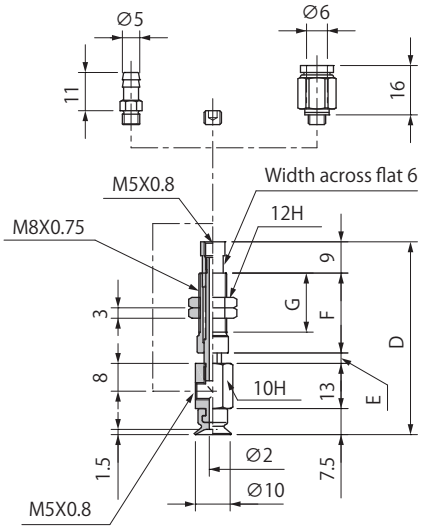

Model number	D	E	F	G	Weight (g)
NAPFT/YH-10A-3-□ (-T/O)	55.5	3	23	17	18.5
NAPFT/YH-10A-10-□ (-T/O)	62.5	10			19
NAPFT/YH-10A-15-□ (-T/O)	75	15	30.5	24.5	22

※□ in the table indicates the cup material.
※The weight value is when NBR（Nitrile rubber）/ without connector selected.

NAPFT/YH-15A

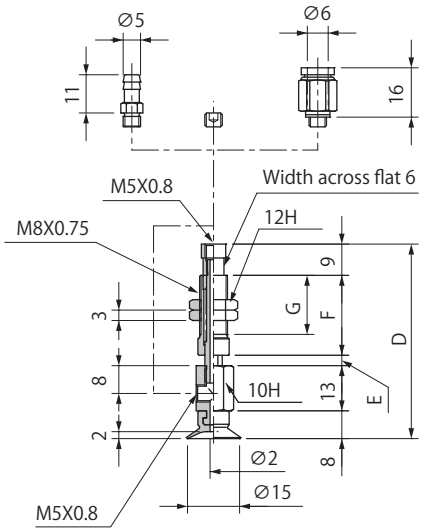

Model number	D	E	F	G	Weight (g)
NAPFT/YH-15A-3-□ (-T/O)	56	3	23	17	18.5
NAPFT/YH-15A-10-□ (-T/O)	63	10			19
NAPFT/YH-15A-15-□ (-T/O)	75.5	15	30.5	24.5	22

※□ in the table indicates the cup material.
※The weight value is when NBR（Nitrile rubber）/ without connector selected.

NAPFT/YH-20B

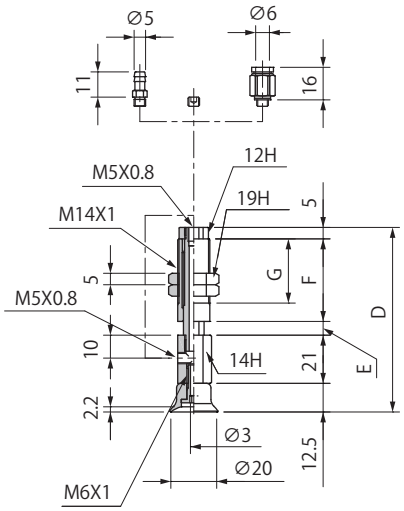

Model number	D	E	F	G	Weight (g)
NAPFT/YH-20B-6-□ (-T/O)	80.5	6	36	28	64
NAPFT/YH-20B-15-□ (-T/O)	89.5	15			69
NAPFT/YH-20B-30-□ (-T/O)	126.5	30	58	50	93

※□ in the table indicates the cup material.
※The weight value is when NBR（Nitrile rubber）/ without connector selected.

NAPFT/YH-25

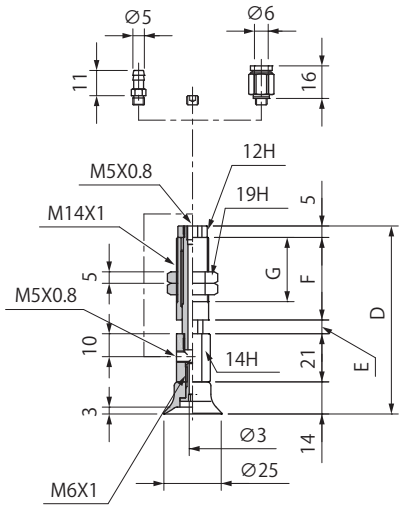

Model number	D	E	F	G	Weight (g)
NAPFT/YH-25-6-□ (-T/O)	82	6	36	28	64.5
NAPFT/YH-25-15-□ (-T/O)	91	15			69.5
NAPFT/YH-25-30-□ (-T/O)	128	30	58	50	93.5

※□ in the table indicates the cup material.
※The weight value is when NBR（Nitrile rubber）/ without connector selected.

Common Specifications

Connector Weight(g)

Symbol	Tube O.D ϕ 6
T	1.5
O	4.0

Dimensions

(mm)

NAPFT/YH-30

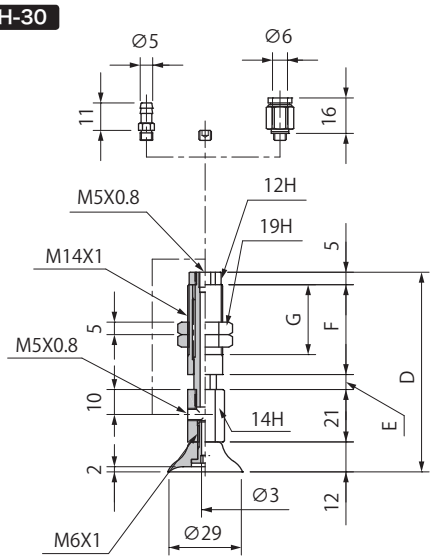

Model number	D	E	F	G	Weight (g)
NAPFT/YH-30-6-□ (-T/O)	80	6	36	28	65.5
NAPFT/YH-30-15-□ (-T/O)	89	15			70.5
NAPFT/YH-30-30-□ (-T/O)	126	30	58	50	94.5

※□ in the table indicates the cup material.
※The weight value is when NBR（Nitrile rubber）/ without connector selected.

NAPFT/YH-35

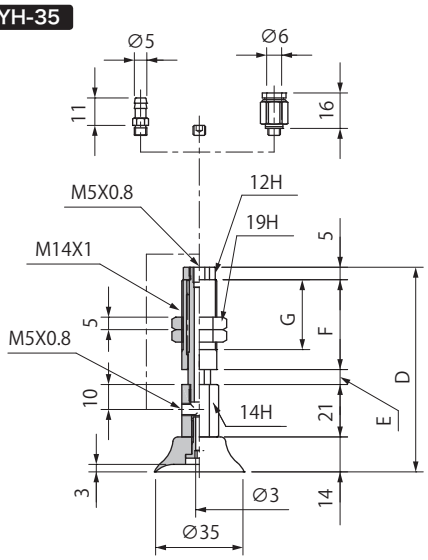

Model number	D	E	F	G	Weight (g)
NAPFT/YH-35-6-□ (-T/O)	82	6	36	28	68
NAPFT/YH-35-15-□ (-T/O)	91	15			73
NAPFT/YH-35-30-□ (-T/O)	128	30	58	50	97

※□ in the table indicates the cup material.
※The weight value is when NBR（Nitrile rubber）/ without connector selected.

NAPFT/YH-40

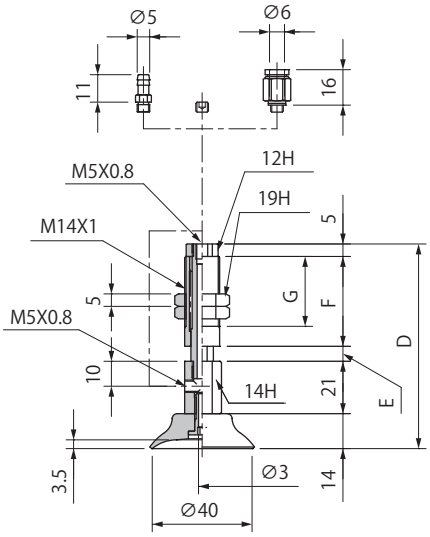

Model number	D	E	F	G	Weight (g)
NAPFT/YH-40-6-□ (-T/O)	82	6	36	28	69.5
NAPFT/YH-40-15-□ (-T/O)	91	15			74.5
NAPFT/YH-40-30-□ (-T/O)	128	30	58	50	98.5

※□ in the table indicates the cup material.
※The weight value is when NBR（Nitrile rubber）/ without connector selected.

NAPFT/YH-50

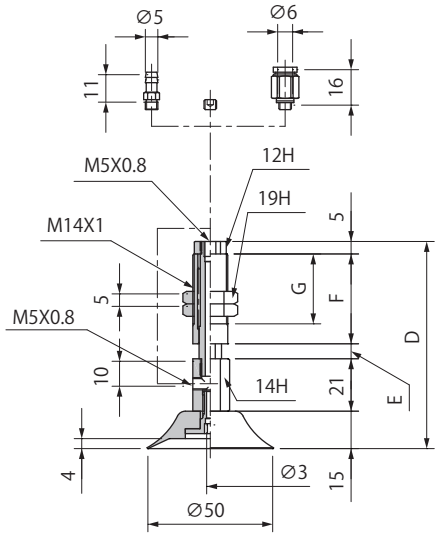

Model number	D	E	F	G	Weight (g)
NAPFT/YH-50-6-□ (-T/O)	83	6	36	28	78
NAPFT/YH-50-15-□ (-T/O)	92	15			83
NAPFT/YH-50-30-□ (-T/O)	129	30	58	50	107

※□ in the table indicates the cup material.
※The weight value is when NBR（Nitrile rubber）/ without connector selected.

Common Specifications

Connector Weight(g)

Symbol	Tube O.D ϕ 6
T	1.5
O	4.0

PFO Series

Flat Cup with Oil Grooves

RoHS

Flat type cup with oil grooves.
For workpieces with smooth and even surfaces, the workpiece which has an oil film in the surface !

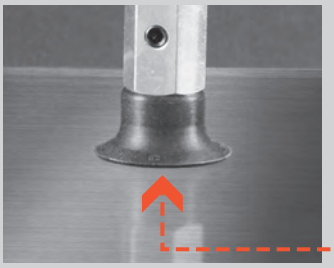

Metal sheet

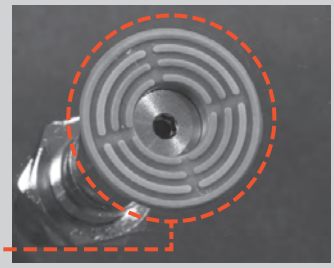

Suction surface

Glass cup

Wide range of cup sizes.

ϕ20 ϕ25 ϕ30 ϕ35 ϕ40

Various fittings for many kinds of applications.

Fixed fitting

Spring fitting

Suction Cup

PFOG	Cup size (mm) ϕ20～40		P.311

Fitting

Type	Applicable cup size (mm)	Stroke (mm)	Vacuum port	Piping・Connector	Page
Cup with fixed fitting PFOTK	ϕ 20～40	N/A	Top	Barb	P.313
Cup with fixed fitting PFOYK	ϕ 20～40	N/A	Side	Barb	P.313
Cup with spring fitting NAPFOTS	ϕ 20～40	6, 15, 30	Top	Female screw Push-in Barb	P.315
Cup with spring fitting NAPFOYS	ϕ 20～40	6, 15, 30	Side	Female screw Push-in Barb	P.315
Cup with non-rotation spring fitting NAPFOTH	ϕ 20～40	6, 15, 30	Top	Female screw Push-in Barb	P.319
Cup with non-rotation spring fitting NAPFOYH	ϕ 20～40	6, 15, 30	Side	Female screw Push-in Barb	P.319
Setting screw	ϕ 20～40	—	—	—	P.503

Suction Cup Selection Guide ••→ P.163

PFOG Flat Cup with Oil Grooves

How to Order

PFOG – 20 – N
① ②

① Cup Size (mm)

Symbol	Cup size
20	ϕ20
25	ϕ25
30	ϕ30
35	ϕ35
40	ϕ40

② Cup Rubber Material

Symbol	Material
N	NBR(Nitrile rubber)
S	Silicone rubber

※ Please consult with us for other material.

Cup Rubber Material Standard Specifications

Symbol	Material	Hardness (A/s)	Ambient temperature (℃)	Color
N	NBR(Nitrile rubber)	55	-26～120	Black
S	Silicone rubber	55	-60～250	Translucent white

Applicable Rubber Material Table

Material	Color	Symbol	Round type				
			20	25	30	35	40
NBR(Nitrile rubber)	Black	N	●	●	●	●	●
Silicone rubber	Translucent white	S	●	●	●	●	●

●: In stock ○Made to order ×: None
※Please consult with us for other material.

Dimensions

(mm)

PFOG-20

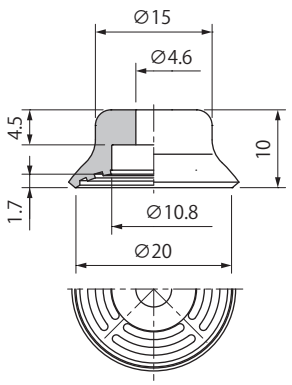

PFOG-25

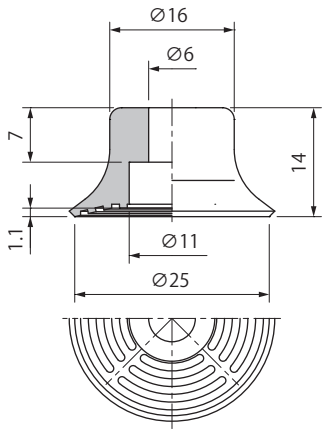

PFOG-30

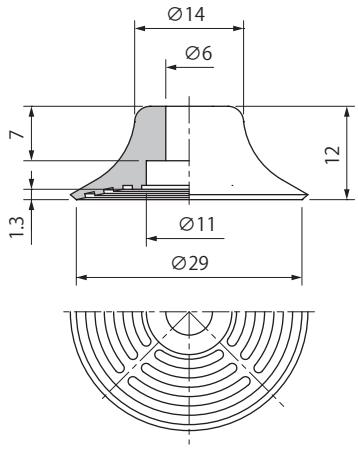

PFOG-35

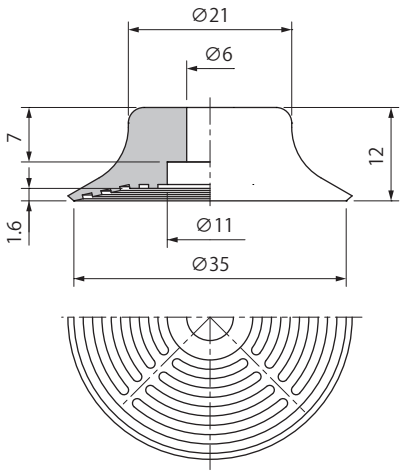

PFOG-40

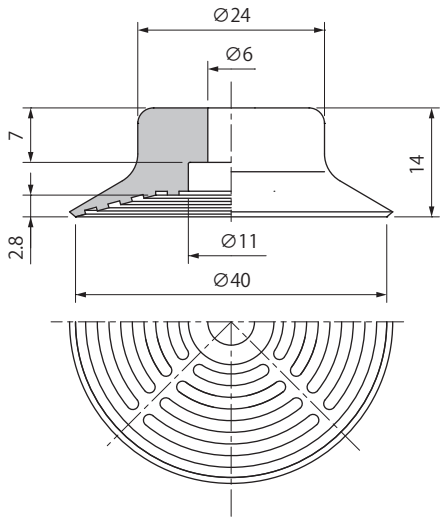

Weight

(g)

Model ＼ Material	N	S	Applicable setting screw (Screw specifications)
PFOG-20	1.6	1.6	TN-PF-20-M5 (Male M5X0.8)
PFOG-25	3.0	3.0	TN-PF-25-M6 (Male M6X1.0)
PFOG-30	2.9	2.9	
PFOG-35	5.2	5.2	
PFOG-40	7.3	7.3	

※Please refer to P.503 for setting screw detailed specifications.

02 Suction Cup
PA
PB
PC
PCD
PD
PF
PFO
PH
PJ
CORE
PK2
PK2B
PK2L
PL
PN
PN-B
PP
PQ
PR
PU
PW
RA
SM
TN

PFOTK•YK Cup with Fixed Fitting

Consisting of fitting, setting screw, suction cup.

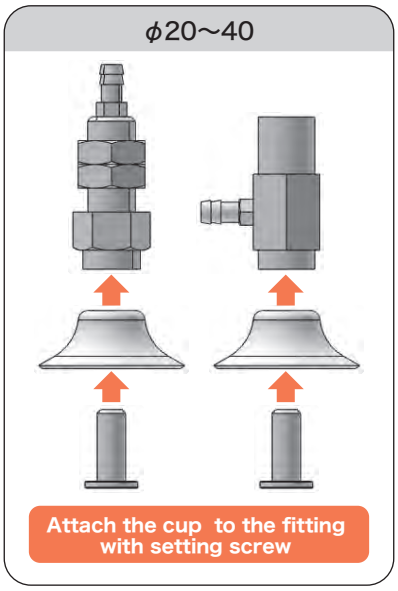

How to Order

PFO T K – 30 – N

① ② ③

① Vacuum Port

T	Top
Y	Side

② Cup Size (mm)

Symbol	Cup size
20	ϕ20
25	ϕ25
30	ϕ30
35	ϕ35
40	ϕ40

③ Cup Rubber Material

Symbol	Material
N	NBR(Nitrile rubber)
S	Silicone rubber

※ Please consult with us for other material.

Combination Table

Top Port

Model number	Cup	Setting screw	Fitting	Piping specifications	
PFOTK-20-□	PFOG-20-□	TN-PF-20-M5	PFTK-15-K	Barb	ϕ 6X4
PFOTK-25-□	PFOG-25-□	TN-PF-25-M6	PFTK-25-K		
PFOTK-30-□	PFOG-30-□				
PFOTK-35-□	PFOG-35-□				
PFOTK-40-□	PFOG-40-□				

※□ in the table indicates the cup material.

Side Port

Model number	Cup	Setting screw	Fitting	Piping specifications	
PFOYK-20-□	PFOG-20-□	TN-PF-20-M5	PFYK-15-K	Barb	ϕ 6X4
PFOYK-25-□	PFOG-25-□	TN-PF-25-M6	PFYK-25-K		
PFOYK-30-□	PFOG-30-□				
PFOYK-35-□	PFOG-35-□				
PFOYK-40-□	PFOG-40-□				

※□ in the table indicates the cup material.

Dimensions

(mm)

Top Port /PFOTK-20

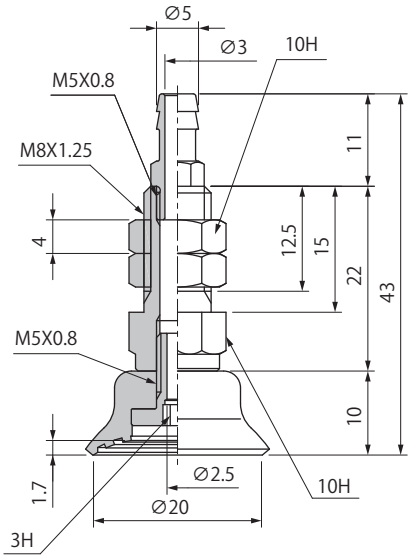

Model number	Weight (g)
PFOTK-20-□	20

※□ in the table indicates the cup material.
※ The weight value is when NBR (Nitrile rubber) selected.

Top Port /PFOTK-25/30/35/40

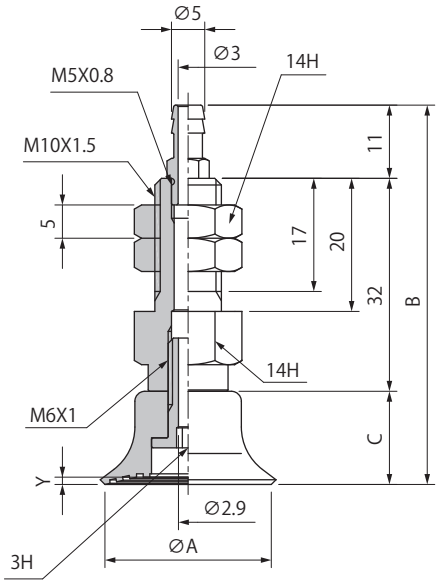

Model number	A	B	C	Y	Weight (g)
PFOTK-25-□	25	57	14	1.1	41
PFOTK-30-□	29	55	12	1.3	
PFOTK-35-□	35			1.6	
PFOTK-40-□	40	57	14	2.8	

※□ in the table indicates the cup material.
※ The weight value is when NBR (Nitrile rubber) selected.

Side Port /PFOYK-20

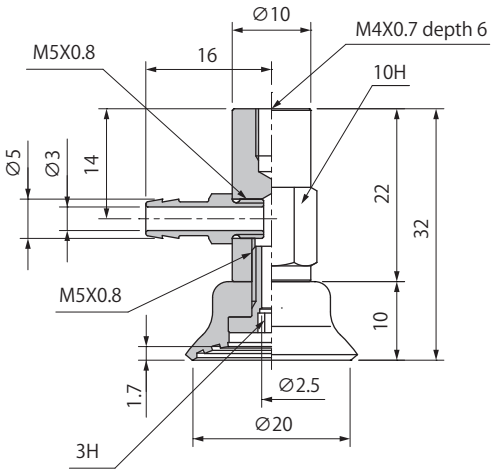

Model number	Weight (g)
PFOYK-20-□	20

※□ in the table indicates the cup material.
※ The weight value is when NBR (Nitrile rubber) selected.

Side Port /PFOYK-25/30/35/40

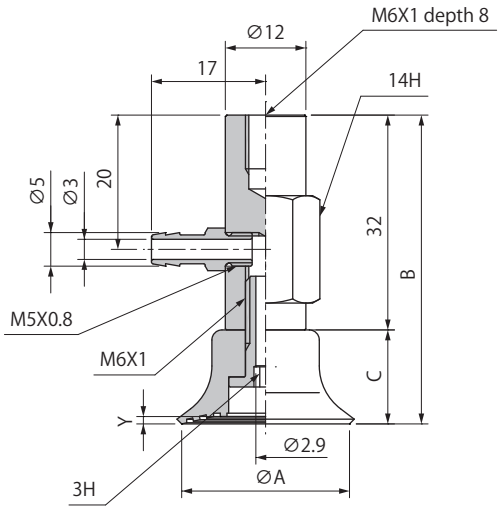

Model number	A	B	C	Y	Weight (g)
PFOYK-25-□	25	46	14	1.1	41
PFOYK-30-□	29	44	12	1.3	
PFOYK-35-□	35			1.6	
PFOYK-40-□	40	46	14	2.8	51

※□ in the table indicates the cup material.
※ The weight value is when NBR (Nitrile rubber) selected.

NAPFOTS·YS Cup with Spring Fitting

Consisting of fitting, setting screw, suction cup.

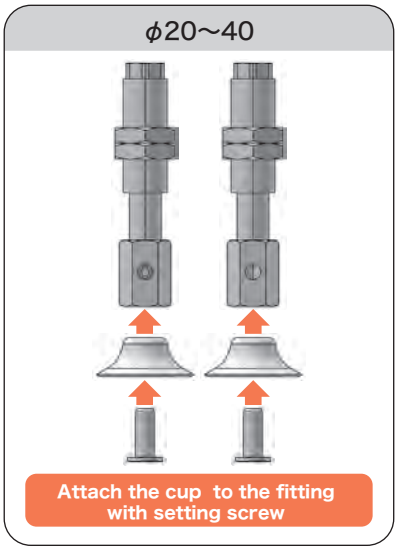

How to Order

NAPFO T S – 20-6 – N – T

① ② ③ ④

① Vacuum Port

T	Top
Y	Side

② Cup Size - Stroke (mm)

Symbol	Cup size Stroke	Symbol	Cup size Stroke
20-6	ϕ20-6	35-6	ϕ35-6
20-15	ϕ20-15	35-15	ϕ35-15
20-30	ϕ20-30	35-30	ϕ35-30
25-6	ϕ25-6	40-6	ϕ40-6
25-15	ϕ25-15	40-15	ϕ40-15
25-30	ϕ25-30	40-30	ϕ40-30
30-6	ϕ30-6		
30-15	ϕ30-15		
30-30	ϕ30-30		

③ Cup Rubber Material

Symbol	Material
N	NBR (Nitrile rubber)
S	Silicone rubber

※ Please consult with us for other material.

④ Connector

Blank	N/A
T	Barb
O	Push-in

Spring Specifications

Cup size	Unit	ϕ20~40		
Stroke	mm	6	15	30
Spring load at 0 stroke	N	2.45		2.9
Spring load at full stroke	N	3.43	4.9	5.88

Combination Table

Model number	Cup	Setting screw	Fitting	Piping specifications		
				Without connector・blank	Barb connector・T	Push-in connector・O
NAPFO○S-20-6-□ (-T/O)	PFOG-20-□	TN-PF-20-M5	NAPB○S-20-6-K (-T/O)	M5X0.8 (Female)	ϕ6 X 4	
NAPFO○S-20-15-□ (-T/O)			NAPB○S-20-15-K (-T/O)			
NAPFO○S-20-30-□ (-T/O)			NAPB○S-20-30-K (-T/O)			
NAPFO○S-25-6-□ (-T/O)	PFOG-25-□	TN-PF-25-M6	NAPF○S-20B-6-K (-T/O)			
NAPFO○S-25-15-□ (-T/O)			NAPF○S-20B-15-K (-T/O)			
NAPFO○S-25-30-□ (-T/O)			NAPF○S-20B-30-K (-T/O)			
NAPFO○S-30-6-□ (-T/O)	PFOG-30-□		NAPF○S-20B-6-K (-T/O)			
NAPFO○S-30-15-□ (-T/O)			NAPF○S-20B-15-K (-T/O)			
NAPFO○S-30-30-□ (-T/O)			NAPF○S-20B-30-K (-T/O)			
NAPFO○S-35-6-□ (-T/O)	PFOG-35-□		NAPF○S-20B-6-K (-T/O)			
NAPFO○S-35-15-□ (-T/O)			NAPF○S-20B-15-K (-T/O)			
NAPFO○S-35-30-□ (-T/O)			NAPF○S-20B-30-K (-T/O)			
NAPFO○S-40-6-□ (-T/O)	PFOG-40-□		NAPF○S-20B-6-K (-T/O)			
NAPFO○S-40-15-□(-T/O)			NAPF○S-20B-15-K (-T/O)			
NAPFO○S-40-30-□(-T/O)			NAPF○S-20B-30-K (-T/O)			

※□ in the table indicates the cup material.
※○ in the table indicates the vacuum port (T or Y).

NAPFOTS·YS Cup with Spring Fitting

Dimensions

(mm)

NAPFOT/YS-20

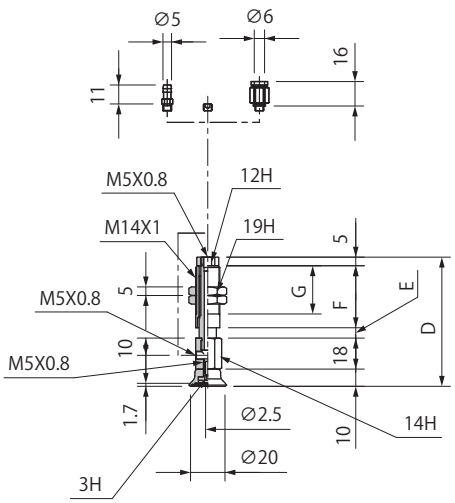

Model number	D	E	F	G	Weight (g)
NAPFOT/YS-20-6-□ (-T/O)	75	6	36	28	66
NAPFOT/YS-20-15-□ (-T/O)	84	15			71
NAPFOT/YS-20-30-□ (-T/O)	121	30	58	50	96

※□ in the table indicates the cup material.
※ The weight value is when NBR (Nitrile rubber) / without connector selected.

NAPFOT/YS-25

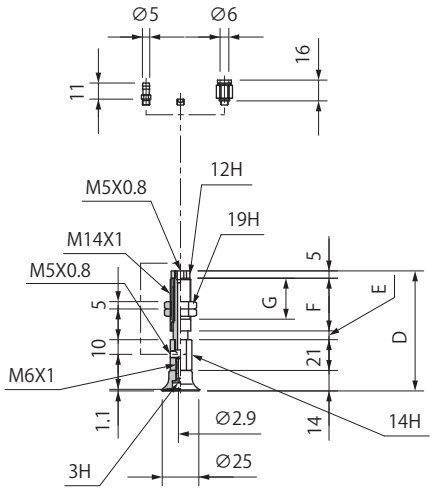

Model number	D	E	F	G	Weight (g)
NAPFOT/YS-25-6-□ (-T/O)	82	6	36	28	66
NAPFOT/YS-25-15-□ (-T/O)	91	15			71
NAPFOT/YS-25-30-□ (-T/O)	128	30	58	50	96

※□ in the table indicates the cup material.
※ The weight value is when NBR (Nitrile rubber) / without connector selected.

NAPFOT/YS-30

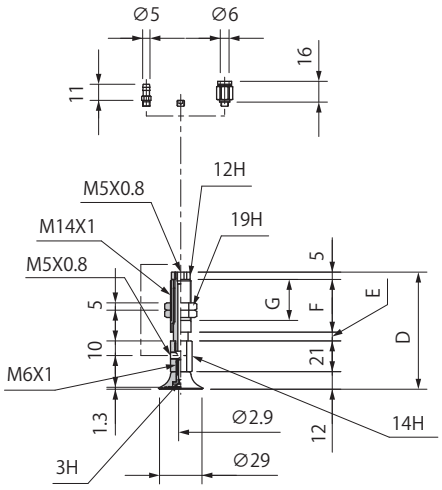

Model number	D	E	F	G	Weight (g)
NAPFOT/YS-30-6-□ (-T/O)	80	6	36	28	66.5
NAPFOT/YS-30-15-□ (-T/O)	89	15			71.5
NAPFOT/YS-30-30-□ (-T/O)	126	30	58	50	96.5

※□ in the table indicates the cup material.
※ The weight value is when NBR (Nitrile rubber) / without connector selected.

NAPFOT/YS-35

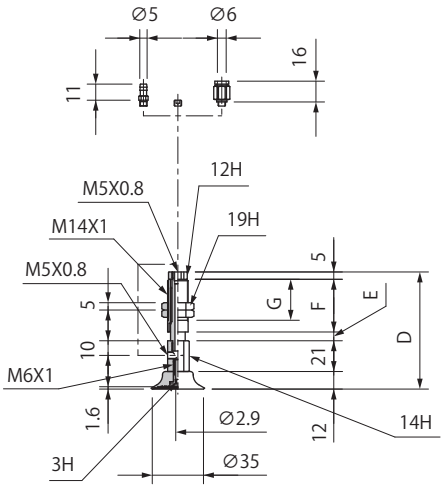

Model number	D	E	F	G	Weight (g)
NAPFOT/YS-35-6-□ (-T/O)	80	6	36	28	68.5
NAPFOT/YS-35-15-□ (-T/O)	89	15			73.5
NAPFOT/YS-35-30-□ (-T/O)	126	30	58	50	98.5

※□ in the table indicates the cup material.
※ The weight value is when NBR (Nitrile rubber) / without connector selected.

Common Specifications

Connector Weight(g)

Symbol	Tube O.D ϕ 6
T	1.5
O	4.0

Dimensions

(mm)

NAPFOT/YS-40

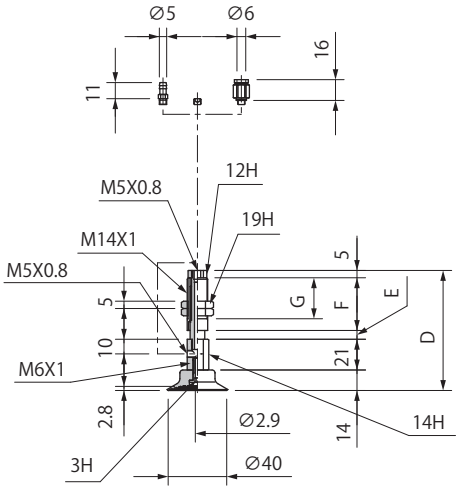

Model number	D	E	F	G	Weight (g)
NAPFOT/YS-40-6-□ (-T/O)	82	6	36	28	70.5
NAPFOT/YS-40-15-□ (-T/O)	91	15			75.5
NAPFOT/YS-40-30-□ (-T/O)	128	30	58	50	100.5

※□ in the table indicates the cup material.
※ The weight value is when NBR（Nitrile rubber）/ without connector selected.

Common Specifications

Connector Weight(g)

Symbol	Tube O.D ϕ 6
T	1.5
O	4.0

NAPFOTH·YH Cup with Non-rotation Spring Fitting

Consisting of fitting, setting screw, suction cup.

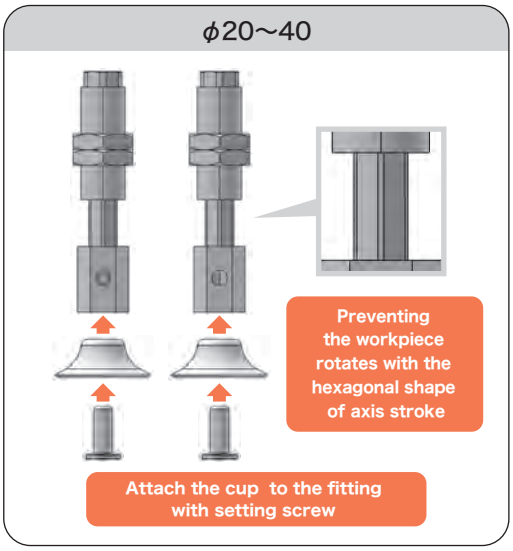

How to Order

NAPFO T H – 20-6 – N – T

① ② ③ ④

① Vacuum port

T	Top
Y	Side

② Cup Size - Stroke (mm)

Symbol	Cup size Stroke	Symbol	Cup size Stroke
20-6	ϕ20-6	35-6	ϕ35-6
20-15	ϕ20-15	35-15	ϕ35-15
20-30	ϕ20-30	35-30	ϕ35-30
25-6	ϕ25-6	40-6	ϕ40-6
25-15	ϕ25-15	40-15	ϕ40-15
25-30	ϕ25-30	40-30	ϕ40-30
30-6	ϕ30-6		
30-15	ϕ30-15		
30-30	ϕ30-30		

③ Cup Rubber Material

Symbol	Material
N	NBR(Nitrile rubber)
S	Silicone rubber

※ Please consult with us for other material.

④ Connector

Blank	N/A
T	Barb
O	Push-in

Spring Specifications

Cup size	Unit	ϕ20～40		
Stroke	mm	6	15	30
Spring load at 0 stroke	N	2.45		2.9
Spring load at full stroke	N	3.43	4.9	5.88

Combination Table

Model number	Cup	Setting screw	Fitting	Piping specifications		
				Without connector・Blank	Barb connector・T	Push-in connector・O
NAPFO○H-20-6-□ (-T/O)	PFOG-20-□	TN-PF-20-M5	NAPB○H-20-6-K (-T/O)	M5X0.8 (Female)	ϕ6 X 4	
NAPFO○H-20-15-□ (-T/O)			NAPB○H-20-15-K (-T/O)			
NAPFO○H-20-30-□ (-T/O)			NAPB○H-20-30-K (-T/O)			
NAPFO○H-25-6-□ (-T/O)	PFOG-25-□	TN-PF-25-M6	NAPF○H-20B-6-K (-T/O)			
NAPFO○H-25-15-□ (-T/O)			NAPF○H-20B-15-K (-T/O)			
NAPFO○H-25-30-□ (-T/O)			NAPF○H-20B-30-K (-T/O)			
NAPFO○H-30-6-□ (-T/O)	PFOG-30-□		NAPF○H-20B-6-K (-T/O)			
NAPFO○H-30-15-□ (-T/O)			NAPF○H-20B-15-K (-T/O)			
NAPFO○H-30-30-□ (-T/O)			NAPF○H-20B-30-K (-T/O)			
NAPFO○H-35-6-□ (-T/O)	PFOG-35-□		NAPF○H-20B-6-K (-T/O)			
NAPFO○H-35-15-□ (-T/O)			NAPF○H-20B-15-K (-T/O)			
NAPFO○H-35-30-□ (-T/O)			NAPF○H-20B-30-K (-T/O)			
NAPFO○H-40-6-□ (-T/O)	PFOG-40-□		NAPF○H-20B-6-K (-T/O)			
NAPFO○H-40-15-□ (-T/O)			NAPF○H-20B-15-K (-T/O)			
NAPFO○H-40-30-□ (-T/O)			NAPF○H-20B-30-K (-T/O)			

※□ in the table indicates the cup material.
※○ in the table indicates the vacuum port (T or Y).

NAPFOTH·YH Cup with Non-rotation Spring Fitting

Dimensions

(mm)

NAPFOT/YH-20

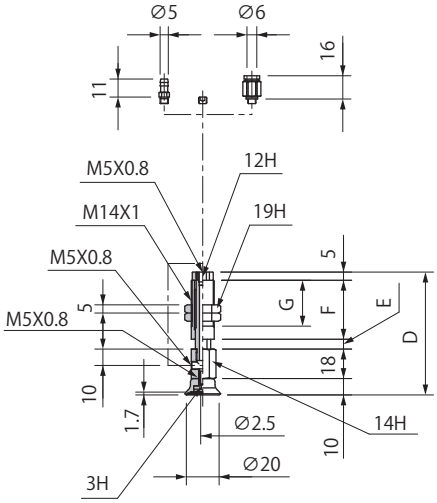

Model number	D	E	F	G	Weight (g)
NAPFOT/YH-20-6-□ (-T/O)	75	6	36	28	64.5
NAPFOT/YH-20-15-□ (-T/O)	84	15			69.5
NAPFOT/YH-20-30-□ (-T/O)	121	30	58	50	93.5

※□ in the table indicates the cup material.
※ The weight value is when NBR（Nitrile rubber）/ without connector selected.

NAPFOT/YH-25

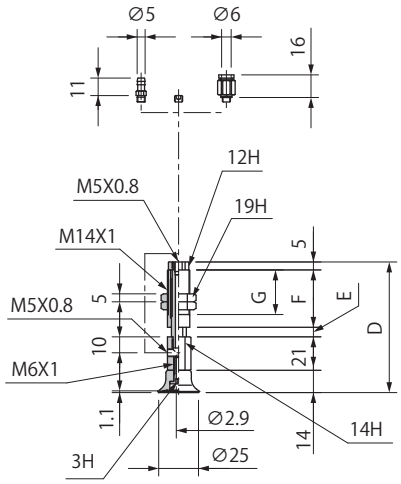

Model number	D	E	F	G	Weight (g)
NAPFOT/YH-25-6-□ (-T/O)	82	6	36	28	64.5
NAPFOT/YH-25-15-□ (-T/O)	91	15			69.5
NAPFOT/YH-25-30-□ (-T/O)	128	30	58	50	93.5

※□ in the table indicates the cup material.
※ The weight value is when NBR（Nitrile rubber）/ without connector selected.

NAPFOT/YH-30

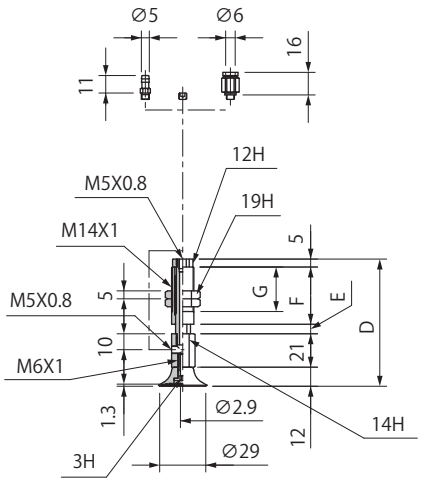

Model number	D	E	F	G	Weight (g)
NAPFOT/YH-30-6-□ (-T/O)	80	6	36	28	65
NAPFOT/YH-30-15-□ (-T/O)	89	15			70
NAPFOT/YH-30-30-□ (-T/O)	126	30	58	50	94

※□ in the table indicates the cup material.
※ The weight value is when NBR（Nitrile rubber）/ without connector selected.

NAPFOT/YH-35

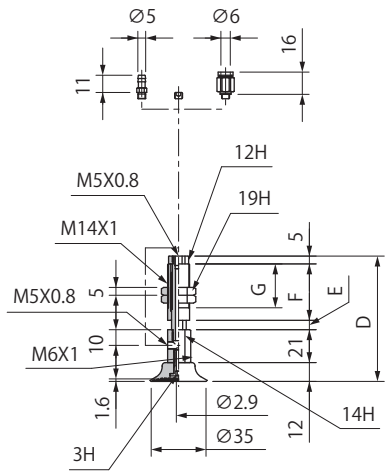

Model number	D	E	F	G	Weight (g)
NAPFOT/YH-35-6-□ (-T/O)	80	6	36	28	67
NAPFOT/YH-35-15-□ (-T/O)	89	15			72
NAPFOT/YH-35-30-□ (-T/O)	126	30	58	50	96

※□ in the table indicates the cup material.
※ The weight value is when NBR（Nitrile rubber）/ without connector selected.

Common Specifications

Connector Weight(g)

Symbol	Tube O.D ϕ 6
T	1.5
O	4.0

Dimensions

(mm)

NAPFOT/YH-40

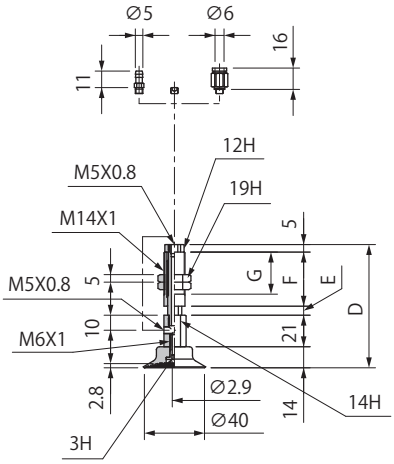

Model number	D	E	F	G	Weight (g)
NAPFOT/YH-40-6-□ (-T/O)	82	6	36	28	69
NAPFOT/YH-40-15-□ (-T/O)	91	15			74
NAPFOT/YH-40-30-□ (-T/O)	128	30	58	50	98

※□ in the table indicates the cup material.
※ The weight value is when NBR（Nitrile rubber）/ without connector selected.

Common Specifications

Connector Weight(g)

Symbol	Tube O.D ϕ 6
T	1.5
O	4.0

PH Series

Deep Cup

RoHS

Suction cup with great internal depth.
For workpieces whose surface have the projection, and suction while surrounding the projection!

Height comparison of PH and PF

Egg-shaped glass

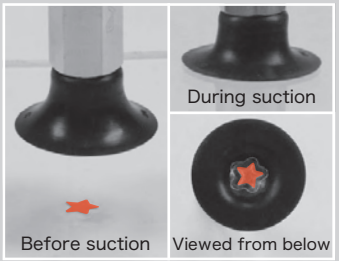

Workpieces whose surface have the projection

Wide range of cup sizes.

ϕ30 ϕ45 ϕ65 ϕ90

Various fittings for many kinds of applications.

Fixed fitting

Spring fitting

Suction Cup

PHG	Cup size (mm) ϕ 30～90		P.325

Fitting

Type	Applicable cup size (mm)	Stroke (mm)	Vacuum port	Piping・Connector	Page
Cup with fixed fitting PHTK	ϕ 30, 45	N/A	Top	Barb	P.327
	ϕ 65, 90			Female screw	
Cup with fixed fitting PHYK	ϕ 30, 45	N/A	Side	Barb	P.327
	ϕ 65, 90			Female screw	
Cup with spring fitting NAPHTS	ϕ 30, 45	6, 15, 30	Top	Female screw Push-in Barb	P.329
	ϕ 65, 90	10, 30, 50		Female screw	
Cup with spring fitting NAPHYS	ϕ 30, 45	6, 15, 30	Side	Female screw Push-in Barb	P.329
	ϕ 65, 90	10, 30, 50		Female screw	
Cup with non-rotation spring fitting NAPHTH	ϕ 30, 45	3, 10, 15	Top	Female screw Push-in Barb	P.333
Cup with non-rotation spring fitting NAPHYH	ϕ 30, 45	3, 10, 15	Side	Female screw Push-in Barb	P.333
Setting screw	ϕ 30～90	—	—	—	P.503

Suction Cup Selection Guide ••→ P.163

PHG Deep Cup

How to Order

PHG – 30 – N

① ②

① Cup Size (mm)

Symbol	Cup size
30	ϕ30
45	ϕ45
65	ϕ65
90	ϕ90

② Cup Rubber Material

Symbol	Material
N	NBR(Nitrile rubber)
S	Silicone rubber

※ Please consult with us for other material.

Cup Rubber Material Standard Specifications

Symbol	Material	Hardness (A/s)	Ambient temperature (℃)	Color
N	NBR(Nitrile rubber)	55	-26 ～ 120	Black
S	Silicone rubber	55	-60 ～ 250	Translucent white

Applicable Rubber Material Table

Material	Color	Symbol	Round type			
			30	45	65	90
NBR(Nitrile rubber)	Black	N	●	●	●	●
Silicone rubber	Translucent white	S	●	●	●	●

●: In stock ○Made to order ×: None
※Please consult with us for other material.

Dimensions

(mm)

PHG-30

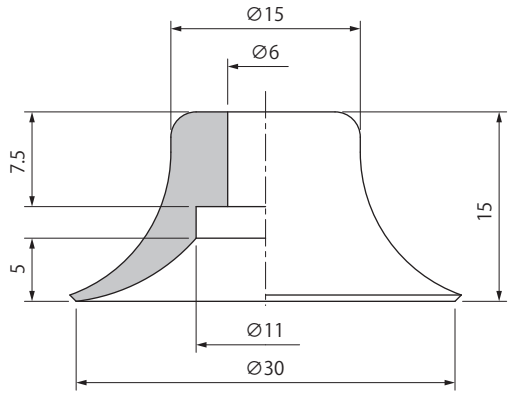

PHG-45

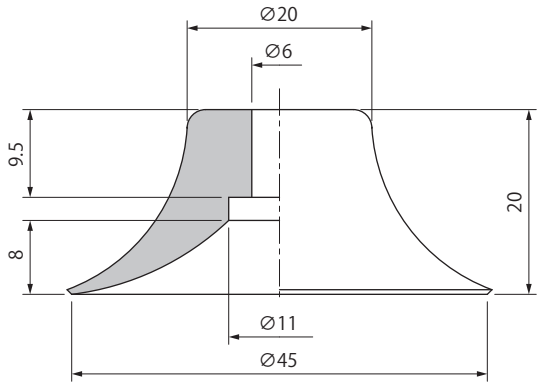

PHG-65

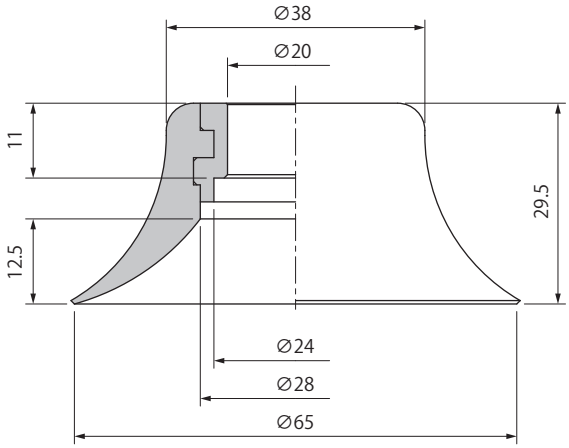

PHG-90

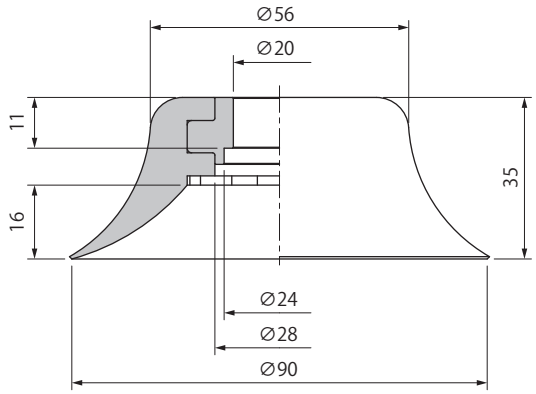

Weight

(g)

Model ＼ Material	N	S	Applicable setting screw (Screw Specifications)
PHG-30	3.0	3.0	TN-PF-25-M6 (Male M6X1.0)
PHG-45	10.0	10.0	
PHG-65	50.7	50.7	TN-PH-65-M10 (Female M10X1.25)
PHG-90	127.0	127.0	

※Please refer to P.503 for setting screw detailed specifications.

PHTK•YK Cup with Fixed Fitting

Consisting of fitting, setting screw, suction cup.

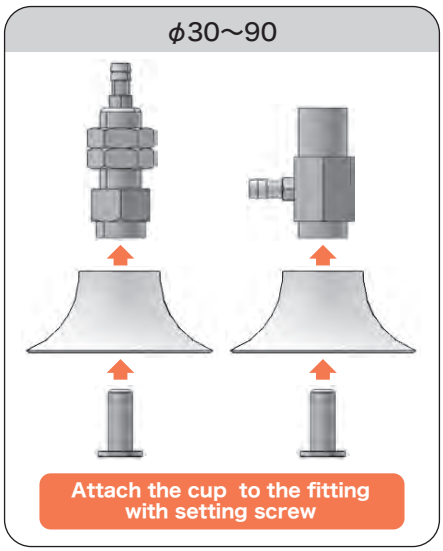

How to Order

PH T K – 30 – N
① ② ③

① Vacuum Port

T	Top
Y	Side

② Cup Size (mm)

Symbol	Cup size
30	ϕ30
45	ϕ45
65	ϕ65
90	ϕ90

③ Cup Rubber Material

Symbol	Material
N	NBR(Nitrile rubber)
S	Silicone rubber

※ Please consult with us for other material.

Combination Table

Top Port

Model number	Cup	Setting screw	Fitting	Piping specifications	
PHTK-30- □	PHG-30- □	TN-PF-25-M6	PFTK-25-K	Barb	ϕ 6X4
PHTK-45- □	PHG-45- □				
PHTK-65- □	PHG-65- □	TN-PH-65-M10	PFTK-60-K	Rc1/8 (Female)	
PHTK-90- □	PHG-90- □				

※□ in the table indicates the cup material.

Side Port

Model number	Cup	Setting screw	Fitting	Piping specifications	
PHYK-30- □	PHG-30- □	TN-PF-25-M6	PFYK-25-K	Barb	ϕ 6X4
PHYK-45- □	PHG-45- □				
PHYK-65- □	PHG-65- □	TN-PH-65-M10	PFYK-60-K	Rc1/8 (Female)	
PHYK-90- □	PHG-90- □				

※□ in the table indicates the cup material.

Dimensions

(mm)

Top Port PHTK-30/45

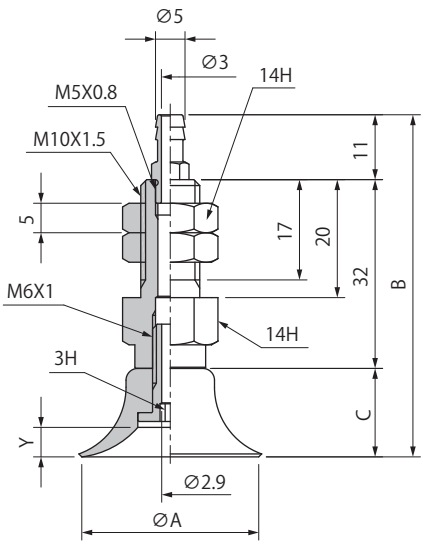

Model number	A	B	C	Y	Weight (g)
PHTK-30-□	30	58	15	5	37
PHTK-45-□	45	63	20	8	44

※□ in the table indicates the cup material.
※ The weight value is when NBR（Nitrile rubber）selected.

Top Port PHTK-65/90

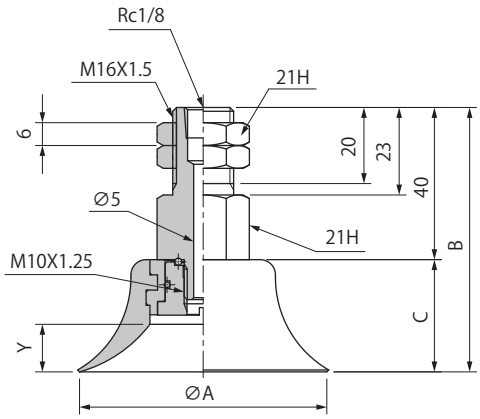

Model number	A	B	C	Y	Weight (g)
PHTK-65-□	65	69.5	29.5	12.5	142
PHTK-90-□	90	75	35	16	188

※□ in the table indicates the cup material.
※ The weight value is when NBR（Nitrile rubber）selected.

Side Port PHYK-30/45

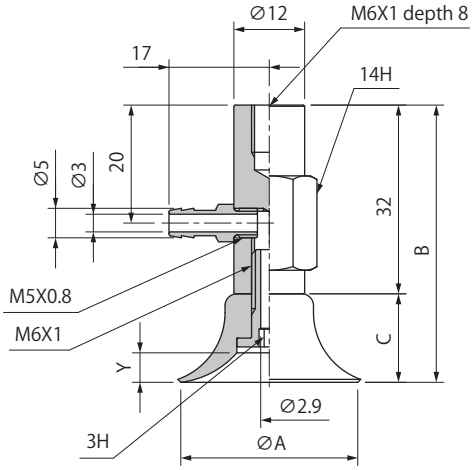

Model number	A	B	C	Y	Weight (g)
PHYK-30-□	30	47	15	5	41
PHYK-45-□	45	52	20	8	48

※□ in the table indicates the cup material.
※ The weight value is when NBR（Nitrile rubber）selected.

Side Port PHYK-65/90

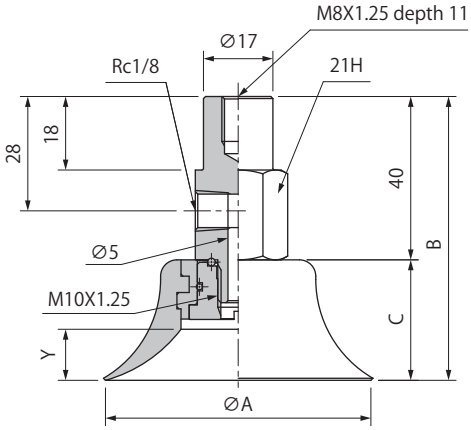

Model number	A	B	C	Y	Weight (g)
PHYK-65-□	65	69.5	29.5	12.5	138
PHYK-90-□	90	75	35	16	184

※□ in the table indicates the cup material.
※ The weight value is when NBR（Nitrile rubber）selected.

NAPHTS•YS Cup with Spring Fitting

Consisting of fitting, setting screw, suction cup.

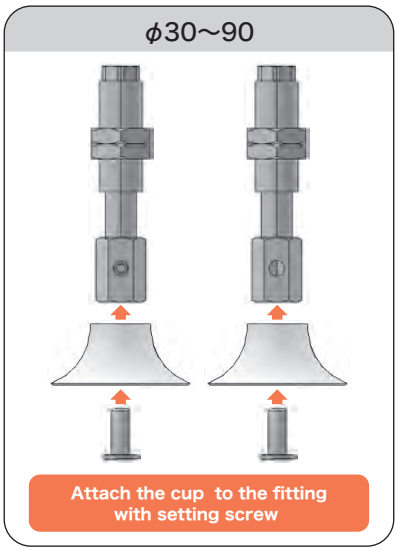

How to Order

NAPH T S – 30-6 – N – T

① ② ③ ④

① Vacuum Port

T	Top
Y	Side

② Cup Size - Stroke (mm)

Symbol	Cup size Stroke	Symbol	Cup size Stroke
30-6	ϕ30-6	65-10	ϕ65-10
30-15	ϕ30-15	65-30	ϕ65-30
30-30	ϕ30-30	65-50	ϕ65-50
45-6	ϕ45-6	90-10	ϕ90-10
45-15	ϕ45-15	90-30	ϕ90-30
45-30	ϕ45-30	90-50	ϕ90-50

③ Cup Rubber Material

Symbol	Material
N	NBR(Nitrile rubber)
S	Silicone rubber

※Please consult with us for other material.

④ Connector

Blank	N/A
T	Barb
O	Push-in

※ϕ 65, 90 can not be selected "T" and "O".

Spring Specifications

Cup size	Unit	ϕ30, 45			ϕ65, 90		
Stroke	mm	6	15	30	10	30	50
Spring load at 0 stroke	N	2.45		2.9	8.82	6.76	8.33
Spring load at full stroke	N	3.43	4.9	5.88	11.8	15.6	19.6

Combination Table

Model number	Cup	Setting screw	Fitting	Piping specifications		
				Without connector・Blank	Barb connector・T	Push-in connector・O
NAPH○S-30-6-□ (-T/O)	PHG-30-□	TN-PF-25-M6	NAPF○S-20B-6-K (-T/O)	M5X0.8 (Female)	ϕ6 X 4	
NAPH○S-30-15-□ (-T/O)			NAPF○S-20B-15-K (-T/O)			
NAPH○S-30-30-□ (-T/O)			NAPF○S-20B-30-K (-T/O)			
NAPH○S-45-6-□ (-T/O)	PHG-45-□		NAPF○S-20B-6-K (-T/O)			
NAPH○S-45-15-□ (-T/O)			NAPF○S-20B-15-K (-T/O)			
NAPH○S-45-30-□ (-T/O)			NAPF○S-20B-30-K (-T/O)			
NAPH○S-65-10-□	PHG-65-□	TN-PH-65-M10	NAPF○S-60-10-K	Rc1/8 (Female)	-	
NAPH○S-65-30-□			NAPF○S-60-30-K			
NAPH○S-65-50-□			NAPF○S-60-50-K			
NAPH○S-90-10-□	PHG-90-□		NAPF○S-60-10-K			
NAPH○S-90-30-□			NAPF○S-60-30-K			
NAPH○S-90-50-□			NAPF○S-60-50-K			

※□ in the table indicates the cup material.
※○ in the table indicates the vacuum port (T or Y).

NAPHTS•YS Cup with Spring Fitting

Dimensions

(mm)

NAPHT/YS-30

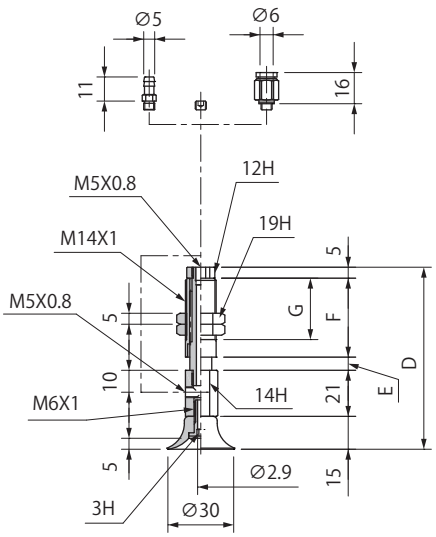

Model number	D	E	F	G	Weight (g)
NAPHT/YS-30-6-□ (-T/O)	83	6	36	28	69
NAPHT/YS-30-15-□ (-T/O)	92	15			74
NAPHT/YS-30-30-□ (-T/O)	129	30	58	50	99

※□ in the table indicates the cup material.
※ The weight value is when NBR (Nitrile rubber) / without connector selected.

NAPHT/YS-45

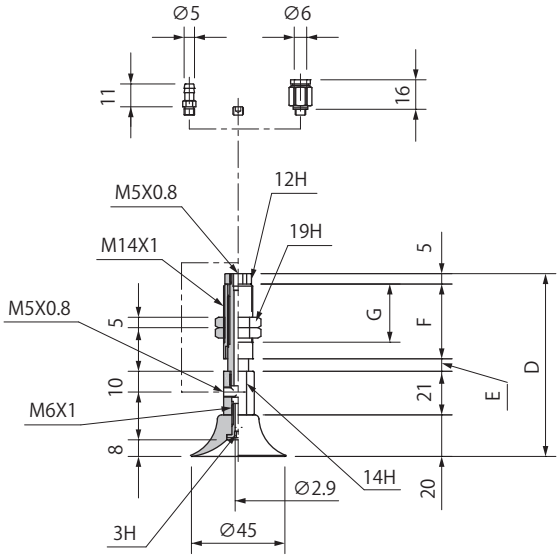

Model number	D	E	F	G	Weight (g)
NAPHT/YS-45-6-□ (-T/O)	88	6	36	28	73
NAPHT/YS-45-15-□ (-T/O)	97	15			78
NAPHT/YS-45-30-□ (-T/O)	134	30	58	50	103

※□ in the table indicates the cup material.
※ The weight value is when NBR (Nitrile rubber) / without connector selected.

NAPHT/YS-65

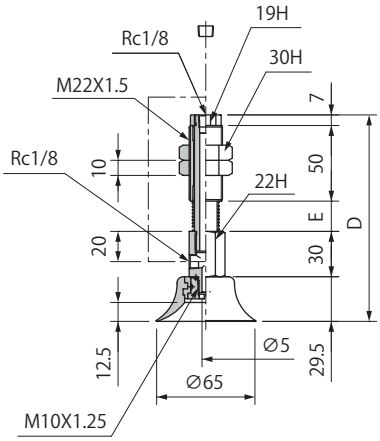

Model number	D	E	Weight (g)
NAPHT/YS-65-10-□ (-T/O)	136.5	20	331
NAPHT/YS-65-30-□ (-T/O)	166.5	50	365
NAPHT/YS-65-50-□ (-T/O)	191.5	75	392

※□ in the table indicates the cup material.
※ The weight value is when NBR (Nitrile rubber) selected.

NAPHT/YS-90

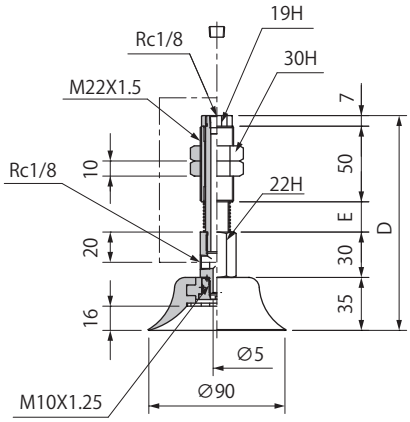

Model number	D	E	Weight (g)
NAPHT/YS-90-10-□ (-T/O)	142	20	408
NAPHT/YS-90-30-□ (-T/O)	172	50	442
NAPHT/YS-90-50-□ (-T/O)	197	75	469

※□ in the table indicates the cup material.
※ The weight value is when NBR (Nitrile rubber) selected.

Common Specifications

Connector Weight(g)

Symbol	Tube O.D ϕ 6
T	1.5
O	4.0

02
Suction Cup
PA
PB
PC
PCD
PD
PF
PFO
PH
PJ
CORE
PK2
PK2B
PK2L
PL
PN
PN-B
PP
PQ
PR
PU
PW
RA
SM
TN

NAPHTH•YH Cup with Non-rotation Spring Fitting

Consisting of fitting, setting screw, suction cup.

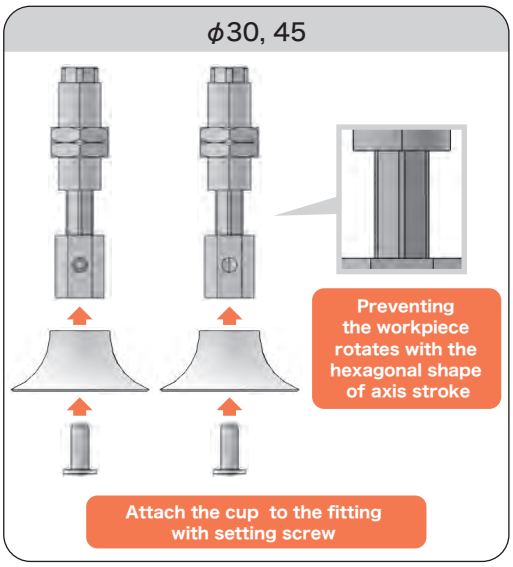

How to Order

NAPH **T** H – **30-6** – **N** – **T**

① ② ③ ④

① Vacuum Port

T	Top
Y	Side

② Cup Size - Stroke (mm)

Symbol	Cup size Stroke
30-6	ϕ30-6
30-15	ϕ30-15
30-30	ϕ30-30
45-6	ϕ45-6
45-15	ϕ45-15
45-30	ϕ45-30

③ Cup Rubber Material

Symbol	Material
N	NBR(Nitrile rubber)
S	Silicone rubber

※ Please consult with us for other material.

④ Connector

Blank	N/A
T	Barb
O	Push-in

Spring Specifications

Cup size	Unit	ϕ30, 45		
Stroke	mm	6	15	30
Spring load at 0 stroke	N	2.45		2.9
Spring load at full stroke	N	3.43	4.9	5.88

Combination Table

Model number	Cup	Setting screw	Fitting	Piping specifications		
				Without connector・Blank	Barb connector・T	Push-in connector・O
NAPH○H-30-6-□ (-T/O)	PHG-30-□	TN-PF-25-M6	NAPF○H-20B-6-K (-T/O)	M5X0.8 (Female)	ϕ6 X 4	
NAPH○H-30-15-□ (-T/O)			NAPF○H-20B-15-K (-T/O)			
NAPH○H-30-30-□ (-T/O)			NAPF○H-20B-30-K (-T/O)			
NAPH○H-45-6-□ (-T/O)	PHG-45-□		NAPF○H-20B-6-K (-T/O)			
NAPH○H-45-15-□ (-T/O)			NAPF○H-20B-15-K (-T/O)			
NAPH○H-45-30-□ (-T/O)			NAPF○H-20B-30-K (-T/O)			

※□ in the table indicates the cup material.
※○ in the table indicates the vacuum port (T or Y).

Dimensions

(mm)

NAPHT/YH-30

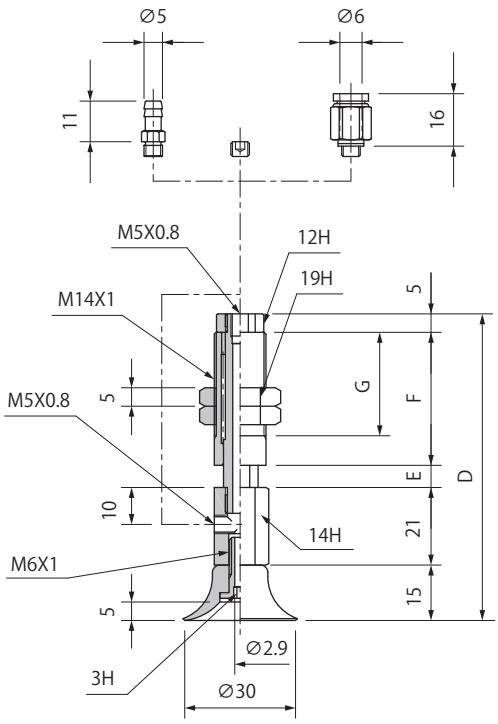

Model number	D	E	F	G	Weight(g)
NAPHT/YH-30-6-□ (-T/O)	83	6	36	28	67.5
NAPHT/YH-30-15-□ (-T/O)	92	15			72.5
NAPHT/YH-30-30-□ (-T/O)	129	30	58	50	96.5

※□ in the table indicates the cup material.
※ The weight value is when NBR（Nitrile rubber）/ without connector selected.

NAPHT/YH-45

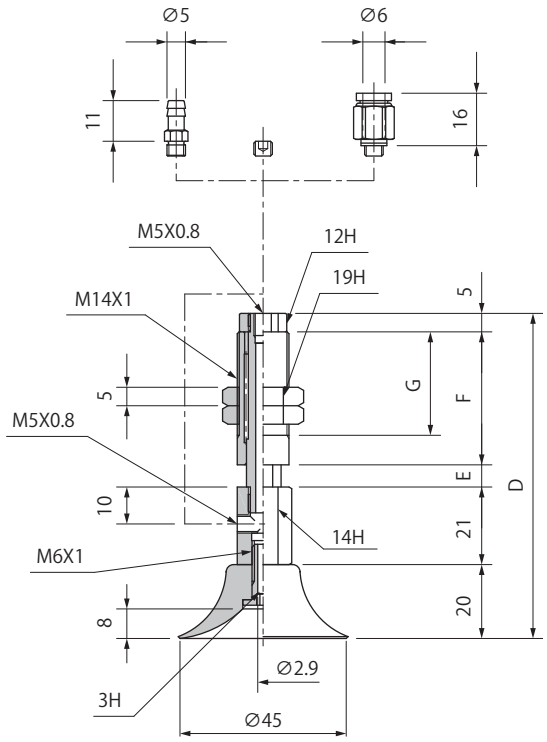

Model number	D	E	F	G	Weight(g)
NAPHT/YH-45-6-□ (-T/O)	88	6	36	28	71.5
NAPHT/YH-45-15-□ (-T/O)	97	15			76.5
NAPHT/YH-45-30-□ (-T/O)	134	30	58	50	100.5

※□ in the table indicates the cup material.
※ The weight value is when NBR（Nitrile rubber）/ without connector selected.

Common Specifications

Connector Weight(g)

Symbol	Tube O.D ϕ 6
T	1.5
O	4.0

PJ Series

2 Bellows Cup

RoHS

2 bellows cup with thin lip
For workpieces with the oblique surface or spherical surface, and when there is no space for attaching spring type fitting !

Workpieces
with the oblique surface

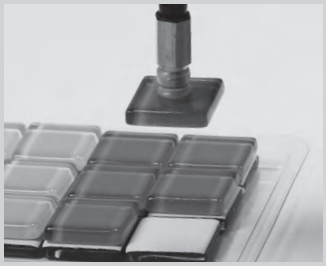

Glass tips

Syringe

Wide range of cup sizes.

ϕ2	ϕ4	ϕ6	ϕ8	ϕ10	ϕ15	ϕ20	ϕ25	ϕ30	ϕ35	ϕ40	ϕ50	ϕ60	ϕ70	ϕ80

Various fittings for many kinds of applications.

Fixed fitting

Spring fitting

Compact type fitting

Mark free core for PJG cup

Suction Cup

PJG	Cup size (mm) ϕ 2～80		P.337

Fitting

Type	Applicable cup size (mm)	Stroke (mm)	Vacuum port	Piping・Connector	Page
Cup with compact fixed fitting PS-□-J-F	ϕ 2～50	N/A	Top	Female screw	P.341
Cup with compact fixed fitting PS-□-J-M	ϕ 2～50	N/A	Top	Male screw	P.341
Cup with fixed fitting PJTK	ϕ 2～50	N/A	Top	Barb	P.345
	ϕ 60～80			Female screw	
Cup with fixed fitting PJYK	ϕ 2～50	N/A	Side	Barb	P.345
	ϕ 60～80			Female screw	
Cup with compact spring fitting PSS	ϕ 2, 4, 6, 8	3, 5	Top	Male screw	P.349
Cup with spring fitting NAPJTS	ϕ 2, 4, 6, 8	3, 6	Top	Female screw Push-in Barb	P.351
	ϕ 10, 15	3, 10, 15			
	ϕ 20～50	6, 15, 30			
	ϕ 60～80	10, 30, 50		Female screw	
Cup with spring fitting NAPJYS	ϕ 2, 4, 6, 8	3, 6	Side	Female screw Push-in Barb	P.351
	ϕ 10, 15	3, 10, 15			
	ϕ 20～50	6, 15, 30			
	ϕ 60～80	10, 30, 50		Female screw	
Cup with non-rotation spring fitting NAPJTH	ϕ 2～15	3, 10, 15	Top	Female screw Push-in Barb	P.357
	ϕ 20～50	6, 15, 30			
Cup with non-rotation spring fitting NAPJYH	ϕ 2～15	3, 10, 15	Side	Female screw Push-in Barb	P.357
	ϕ 20～50	6, 15, 30			
Mark free core CORE	ϕ 6～80	—	—	—	P.363
Setting screw	ϕ 2～50	—	—	—	P.503

Suction Cup Selection Guide P.163

PJG 2 Bellows Cup

How to Order

PJG – 6 – N
① ②

① Cup Size (mm)

Symbol	Cup size	Symbol	Cup size
2	ϕ2	30	ϕ30
4	ϕ4	35	ϕ35
6	ϕ6	40	ϕ40
8	ϕ8	50	ϕ50
10	ϕ10	60	ϕ60
15	ϕ15	70	ϕ70
20	ϕ20	80	ϕ80
25	ϕ25		

② Cup Rubber Material

Symbol	Material
N	NBR(Nitrile rubber)
S	Silicone rubber
U	Urethane rubber
F	Fluorine rubber
NE	Conductive NBR (Nitrile rubber)
SE	Conductive silicone rubber

※Please consult with us for other material.

Cup Rubber Material Standard Specifications

Symbol	Material	Hardness (A/s)	Ambient temperature (℃)	Color	Volume resistivity Note1.2
N	NBR (Nitrile rubber)	55	-26～120	Black	-
S	Silicone rubber	55	-60～250	Translucent white	-
U	Urethane rubber	55	-20～75	Blue	-
F	Fluorine rubber	70	-10～230	Black with white dot	-
NE	Conductive NBR (Nitrile rubber)	70	-26～120	Black with blue dot	10^2～10^3 Ω・cm
SE	Conductive silicone rubber	55	-60～250	Black with red dot	10^2～10^4 Ω・cm

Note1) Volume resistivity shows conductivity, resistance value is per cm^3.
Note2) It is the measured value of in our designated test piece.

Applicable Rubber Material Table

Material	Color	Symbol	Round type														
			2	4	6	8	10	15	20	25	30	35	40	50	60	70	80
NBR (Nitrile rubber)	Black	N	●	●	●	●	●	●	●	●	●	●	●	●	●	●	●
Silicone rubber	Translucent white	S	●	●	●	●	●	●	●	●	●	●	●	●	●	●	●
Urethane rubber	Blue	U	●	●	●	●	●	●	●	●	●	●	●	●	●	●	●
Fluorine rubber	Black with white dot	F	●	●	●	●	●	●	●	●	●	●	●	●	●	●	●
Conductive NBR (Nitrile rubber)	Black with blue dot	NE	●	●	●	●	●	●	●	●	●	●	●	●	○	○	○
Conductive silicone rubber	Black with red dot	SE	●	●	●	●	●	●	●	●	●	●	●	●	○	○	○

●: In stock ○Made to order ×: None
※Please consult with us for other material.

Dimensions

(mm)

PJG-2

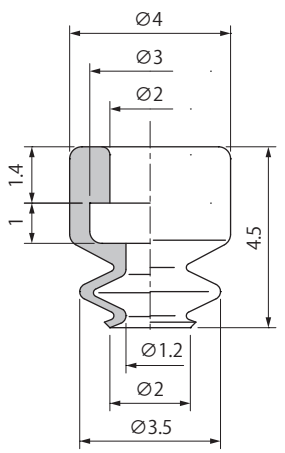

PJG-4

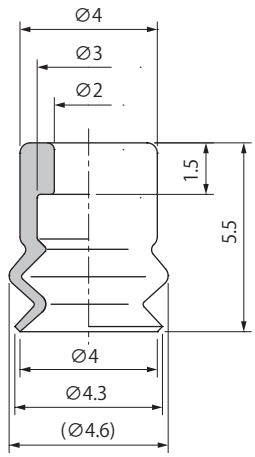

PJG-6

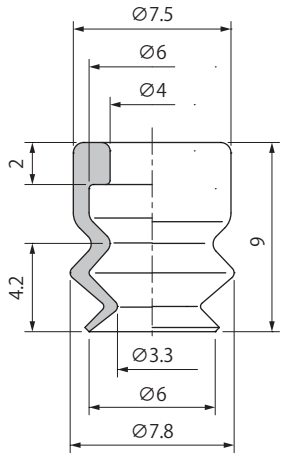

PJG-8

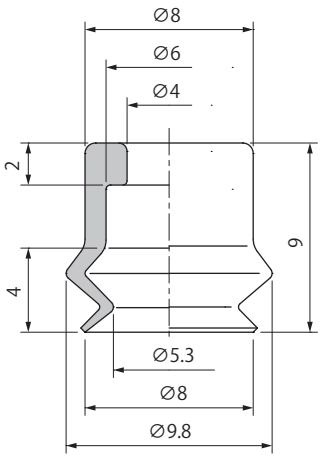

PJG-10

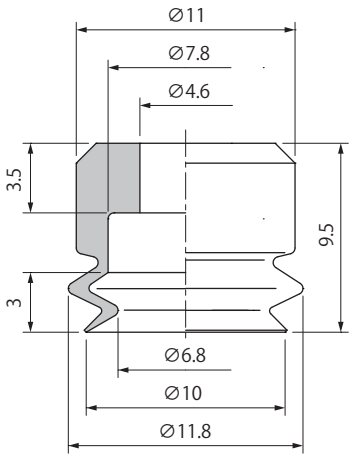

PJG-15

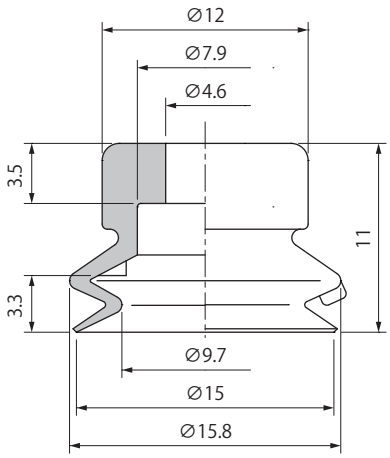

Weight

(g)

Model ＼ Material	N	S	U	F	NE	SE	Applicable setting screw (Screw specifications)
PJG-2	0.1	0.1	0.1	0.1	0.1	0.1	TN-PS-2A-M3 (Male M3X0.5) TN-PS-2A-M3F (Female M3X0.5) TN-PS-2A-M5 (Male M5X0.8)
PJG-4	0.1	0.1	0.1	0.1	0.1	0.1	
PJG-6	0.2	0.2	0.2	0.3	0.2	0.2	TN-PS-10-M5 (Male M5X0.8) TN-PS-10-M5F (Female M5X0.8)
PJG-8	0.3	0.3	0.3	0.4	0.3	0.3	
PJG-10	0.5	0.5	0.6	0.8	0.6	0.5	TN-PF-15-M5 (Male M5X0.8)
PJG-15	0.8	0.8	0.9	1.3	0.9	0.8	

Symbol	Material
N	NBR(Nitrile rubber)
S	Silicone rubber
U	Urethane rubber
F	Fluorine rubber
NE	Conductive NBR (Nitrile rubber)
SE	Conductive silicone rubber

※ Please refer to P.503 for setting screw detailed specifications.

02 Suction Cup
PA
PB
PC
PCD
PD
PF
PFO
PH
PJ
CORE
PK2
PK2B
PK2L
PL
PN
PN-B
PP
PQ
PR
PU
PW
RA
SM
TN

PJG 2 Bellows Cup

Dimensions

(mm)

PJG-20

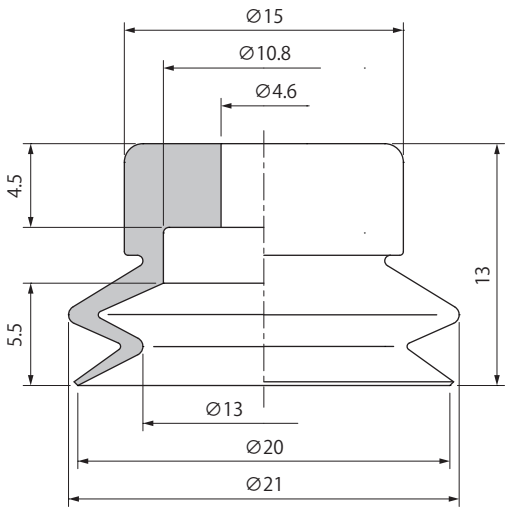

PJG-25

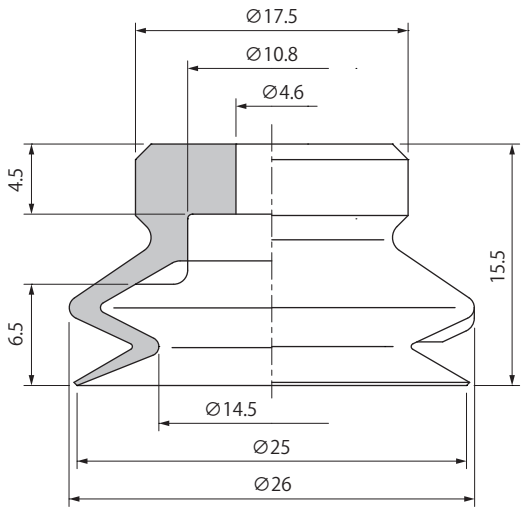

PJG-30

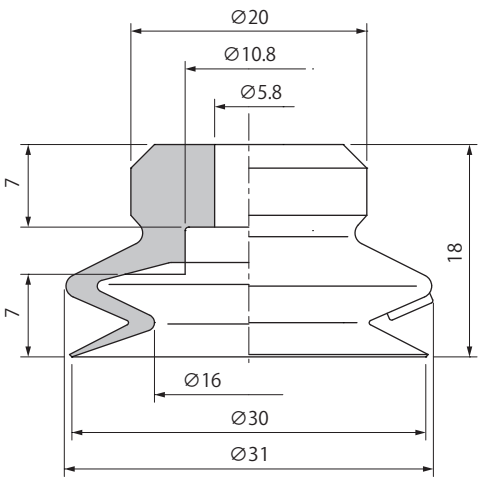

PJG-35

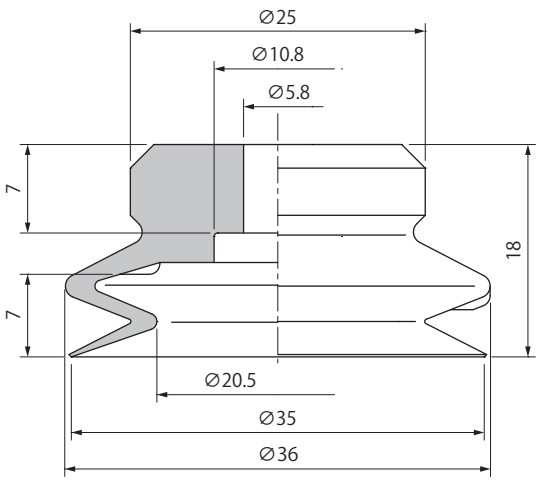

Weight

(g)

Model ＼ Material	N	S	U	F	NE	SE	Applicable setting screws (Screw specifications)
PJG-20	1.6	1.6	1.7	2.5	1.7	1.6	TN-PF-20-M5 (Male M5X0.8)
PJG-25	2.7	2.7	2.9	4.4	2.9	2.7	
PJG-30	5.0	5.0	5.3	8.0	5.3	5.0	TN-PF-25-M6 (Male M6X1.0)
PJG-35	7.3	7.3	7.7	11.7	7.7	7.3	

※ Please refer to P.503 for setting screw detailed specifications.

Symbol	Material
N	NBR(Nitrile rubber)
S	Silicone rubber
U	Urethane rubber
F	Fluorine rubber
NE	Conductive NBR (Nitrile rubber)
SE	Conductive silicone rubber

Dimensions

(mm)

PJG-40

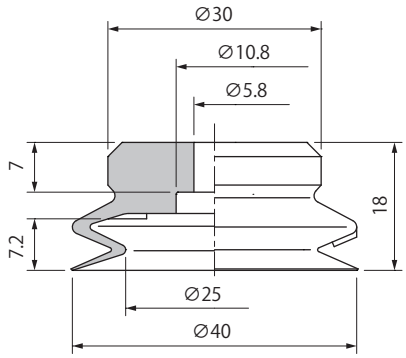

PJG-50

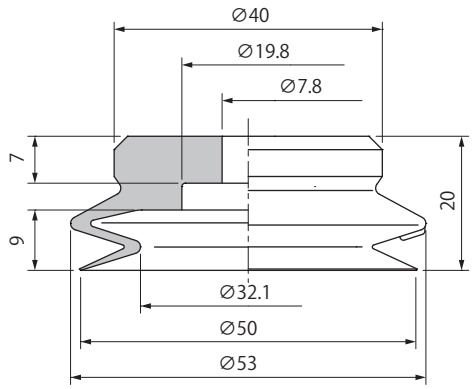

PJG-60

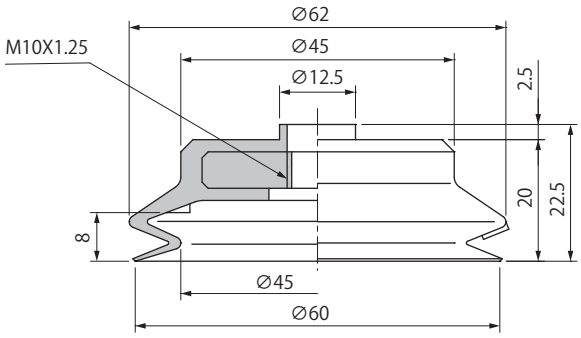

PJG-70

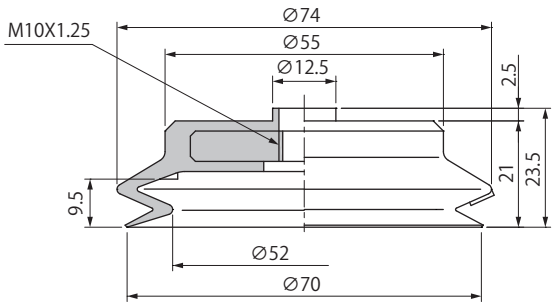

PJG-80

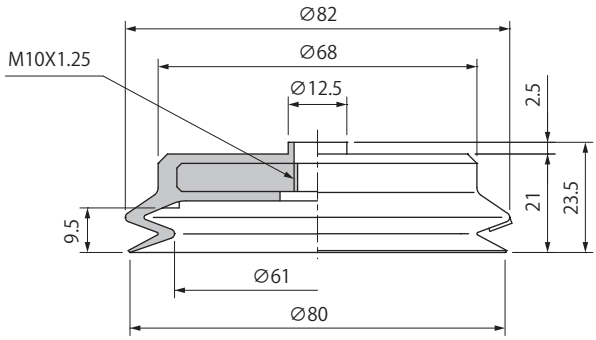

Weight

(g)

Model \ Material	N	S	U	F	NE	SE	Applicable setting screws (Screw specifications)
PJG-40	10.0	10.0	10.5	16.0	10.5	10.0	TN-PF-25-M6 (Male M6X1.0)
PJG-50	19.1	19.1	20.1	30.6	20.1	19.1	TN-PF-50-M6 (Male M6X1.0) TN-PF-50-M8 (Male M8X1.25)
PJG-60	34.6	34.6	35.6	46.1	35.6	34.6	—
PJG-70	53.0	53.0	54.5	70.4	54.5	53.0	
PJG-80	78.0	78.0	79.8	99.0	79.8	78.0	

※ Please refer to P.503 for setting screw detailed specifications.

Symbol	Material
N	NBR(Nitrile rubber)
S	Silicone rubber
U	Urethane rubber
F	Fluorine rubber
NE	Conductive NBR (Nitrile rubber)
SE	Conductive silicone rubber

PS Cup with Compact Fixed Fitting

Male Screw

Female Screw

Simple constitution of the cup and the screw.

ϕ2～8

Screw and the cup can be disassembled

Attach the cup directly to the screw

Model number	Cup	Setting screw	Screw size
PS-2-J-M- □	PJG-2- □	TN-PS-2A-M3	M3X0.5
PS-4-J-M- □	PJG-4- □		
PS-6-J-M- □	PJG-6- □	TN-PS-10-M5	M5X0.8
PS-8-J-M- □	PJG-8- □		

Model number	Cup	Setting screw	Screw size
PS-2-J-F- □	PJG-2- □	TN-PS-2A-M3F	M3X0.5
PS-4-J-F- □	PJG-4- □		
PS-6-J-F- □	PJG-6- □	TN-PS-10-M5F	M5X0.8
PS-8-J-F- □	PJG-8- □		

※□ in the table indicates the cup material.

ϕ10～50

Model number
PS-10-J-M- □ Note1
PS-15-J-M- □
PS-20-J-M- □
PS-30-J-M- □
PS-40-J-M- □
PS-50-J-M- □

R1/8

Screw and the cup are fixed

Screw and the cup can not be disassembled

Rp1/8 depth9

Model number
PS-10-J-F- □ Note1
PS-15-J-F- □
PS-20-J-F- □
PS-30-J-F- □
PS-40-J-F- □
PS-50-J-F- □

Note 1) Screw size is M5.
※□ in the table indicates the cup material.

How to Order

PS – 6 – J – M – N

① ② ③

① Cup Size (mm)

Symbol	Cup size
2	ϕ2
4	ϕ4
6	ϕ6
8	ϕ8
10	ϕ10
15	ϕ15
20	ϕ20
30	ϕ30
40	ϕ40
50	ϕ50

② Screw Type

M	Male screw
F	Female screw

③ Cup Rubber Material

Symbol	Material
N	NBR(Nitrile rubber)
S	Silicone rubber
U	Urethane rubber
F	Fluorine rubber
NE	Conductive NBR (Nitrile rubber)
SE	Conductive silicone rubber

※Please consult with us for other material.

Dimensions

(mm)

PS-2/4-J-M

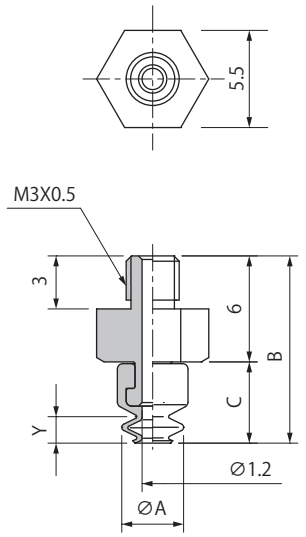

Model number	A	B	C	Y	Weight (g)
PS-2-J-M- □	2	10.5	4.5	1.5	1
PS-4-J-M- □	4	11.5	5.5	2.4	

※□ in the table indicates the cup material.
※ The weight value is when NBR（Nitrile rubber）selected.

PS-6/8-J-M

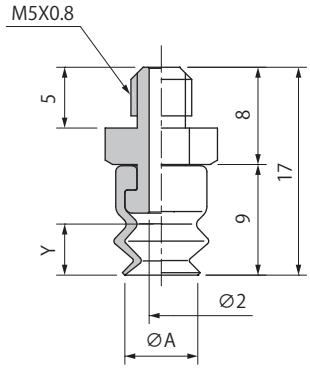

Model number	A	Y	Weight (g)
PS-6-J-M- □	6	4.2	1.5
PS-8-J-M- □	8	4	

※□ in the table indicates the cup material.
※ The weight value is when NBR（Nitrile rubber）selected.

PS-10-J-M

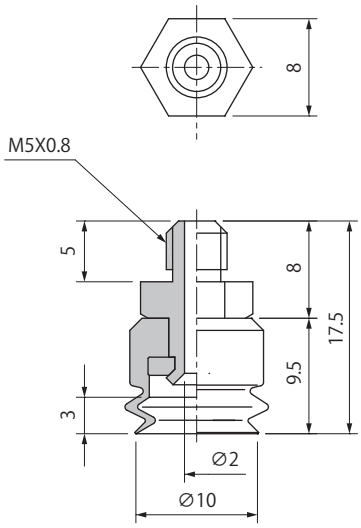

Model number	Weight (g)
PS-10-J-M- □	7

※□ in the table indicates the cup material.
※ The weight value is when NBR（Nitrile rubber）selected.

PS-15/20/30/40/50-J-M

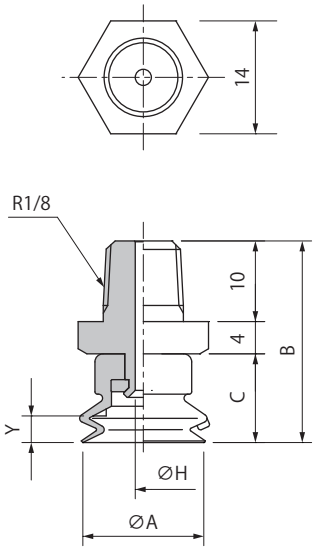

Model number	A	B	C	H	Y	Weight (g)
PS-15-J-M- □	15	25	11	2	3.3	8
PS-20-J-M- □	20	27	13		5.5	9
PS-30-J-M- □	30	32	18	3	7	14
PS-40-J-M- □	40				7.2	16
PS-50-J-M- □	50	34	20	4	9	26

※□ in the table indicates the cup material.
※ The weight value is when NBR（Nitrile rubber）selected.

PS Cup with Compact Fixed Fitting

Dimensions

(mm)

PS-2/4-J-F

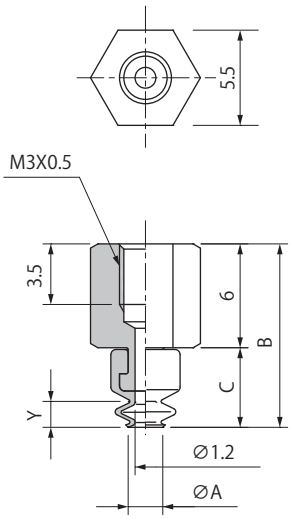

Model number	A	B	C	Y	Weight (g)
PS-2-J-F-□	2	10.5	4.5	1.5	1.5
PS-4-J-F-□	4	11.5	5.5	2.4	

※□ in the table indicates the cup material.
※ The weight value is when NBR（Nitrile rubber）selected.

PS-6/8-J-F

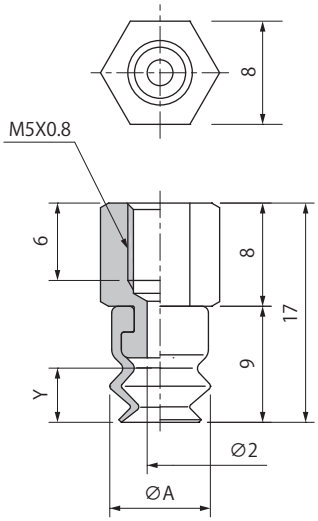

Model number	A	Y	Weight (g)
PS-6-J-F-□	6	4.2	2.5
PS-8-J-F-□	8	4	

※□ in the table indicates the cup material.
※ The weight value is when NBR（Nitrile rubber）selected.

PS-10-J-F

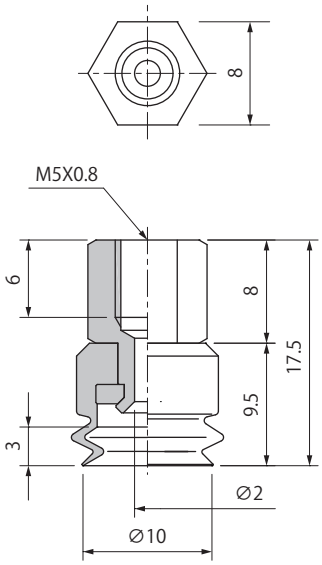

Model number	Weight (g)
PS-10-J-F-□	8

※□ in the table indicates the cup material.
※ The weight value is when NBR（Nitrile rubber）selected.

PS-15/20/30/40/50-J-F

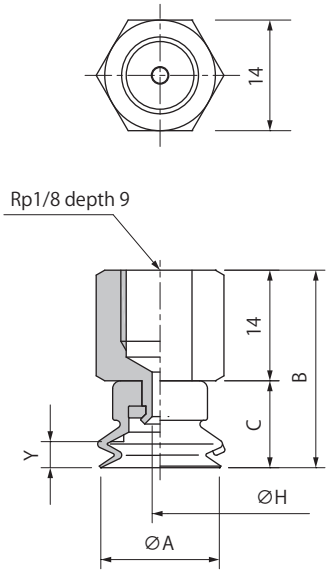

Model number	A	B	C	H	Y	Weight (g)
PS-15-J-F-□	15	25	11	2	3.3	8
PS-20-J-F-□	20	27	13		5.5	10
PS-30-J-F-□	30	32	18	3	7	15
PS-40-J-F-□	40				7.2	17
PS-50-J-F-□	50	34	20	4	9	27

※□ in the table indicates the cup material.
※ The weight value is when NBR（Nitrile rubber）selected.

02
Suction Cup
PA
PB
PC
PCD
PD
PF
PFO
PH
PJ
CORE
PK2
PK2B
PK2L
PL
PN
PN-B
PP
PQ
PR
PU
PW
RA
SM
TN

PJTK•YK Cup with Fixed Fitting

Consisting of fitting, setting screw, suction cup.

ϕ2, 4

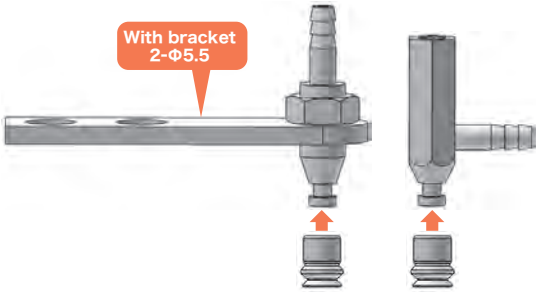

Attach the cup directly to the fitting

ϕ6~8

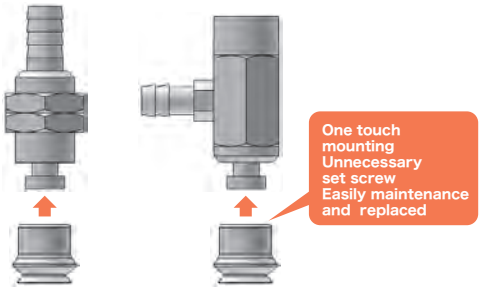

Attach the cup directly to the fitting

ϕ10~50

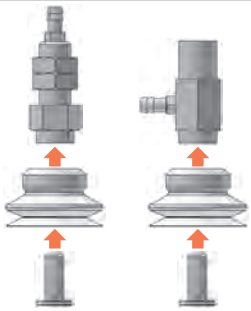

Attach the cup to the fitting with setting screw

ϕ60~80

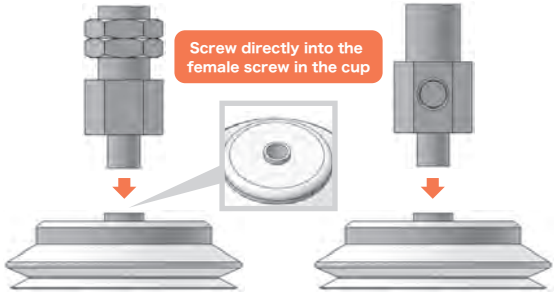

Screw the fitting directly to the cup

How to Order

PJ T K – 6 – N
① ② ③

① Vacuum Port

T	Top
Y	Side

② Cup Size (mm)

Symbol	Cup size	Symbol	Cup size
2	ϕ2	30	Φ30
4	ϕ4	35	Φ35
6	ϕ6	40	Φ40
8	ϕ8	50	Φ50
10	ϕ10	60	Φ60
15	ϕ15	70	Φ70
20	ϕ20	80	Φ80
25	ϕ25		

③ Cup Rubber Material

Symbol	Material
N	NBR(Nitrile rubber)
S	Silicone rubber
U	Urethane rubber
F	Fluorine rubber
NE	Conductive NBR (Nitrile rubber)
SE	Conductive silicone rubber

※Please consult with us for other material.

Combination Table

Top Port

Model number	Cup	Setting screw	Fitting	Piping specifications	
PJTK-2- □	PJG-2- □	Attach the cup directly to the fitting	PFTK-1.5A-K	Barb	ϕ4X2.5
PJTK-4- □	PJG-4- □				
PJTK-6- □	PJG-6- □		PFTK-5A-K		ϕ6X4
PJTK-8- □	PJG-8- □				
PJTK-10- □	PJG-10- □	TN-PF-15-M5	PFTK-15-K		
PJTK-15- □	PJG-15- □				
PJTK-20- □	PJG-20- □	TN-PF-20-M5			
PJTK-25- □	PJG-25- □				
PJTK-30- □	PJG-30- □	TN-PF-25-M6	PFTK-25-K		
PJTK-35- □	PJG-35- □				
PJTK-40- □	PJG-40- □				
PJTK-50- □	PJG-50- □	TN-PF-50-M8	PFTK-50-K		
PJTK-60- □	PJG-60- □	Screw the fitting directly into the female screw in the cup	PFTK-60-K	Rc1/8 (Female)	
PJTK-70- □	PJG-70- □				
PJTK-80- □	PJG-80- □				

※□ in the table indicates the cup material.

Side Port

Model number	Cup	Setting screw	Fitting	Piping specifications	
PJYK-2- □	PJG-2- □	Attach the cup directly to the fitting	PFYK-1.5A-K	Barb	ϕ4X2.5
PJYK-4- □	PJG-4- □				
PJYK-6- □	PJG-6- □		PFYK-5A-K		ϕ6X4
PJYK-8- □	PJG-8- □				
PJYK-10- □	PJG-10- □	TN-PF-15-M5	PFYK-15-K		
PJYK-15- □	PJG-15- □				
PJYK-20- □	PJG-20- □	TN-PF-20-M5			
PJYK-25- □	PJG-25- □				
PJYK-30- □	PJG-30- □	TN-PF-25-M6	PFYK-25-K		
PJYK-35- □	PJG-35- □				
PJYK-40- □	PJG-40- □				
PJYK-50- □	PJG-50- □	TN-PF-50-M8	PFYK-50-K		
PJYK-60- □	PJG-60- □	Screw the fitting directly into the female screw in the cup	PFYK-60-K	Rc1/8 (Female)	
PJYK-70- □	PJG-70- □				
PJYK-80- □	PJG-80- □				

※□ in the table indicates the cup material.

PJTK•YK Cup with Fixed Fitting

Dimensions

(mm)

Top Port PJTK-2/4

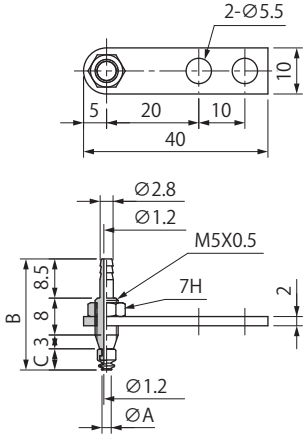

Model number	A	B	C	Weight (g)
PJTK-2- □	2	24	4.5	8
PJTK-4- □	4	25	5.5	

※□ in the table indicates the cup material.
※ The weight value is when NBR (Nitrile rubber) selected.

Top Port PJTK-6/8

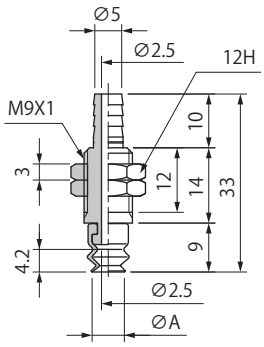

Model number	A	Weight (g)
PJTK-6- □	6	11
PJTK-8- □	8	

※□ in the table indicates the cup material.
※ The weight value is when NBR (Nitrile rubber) selected.

Top Port PJTK-10/15/20/25

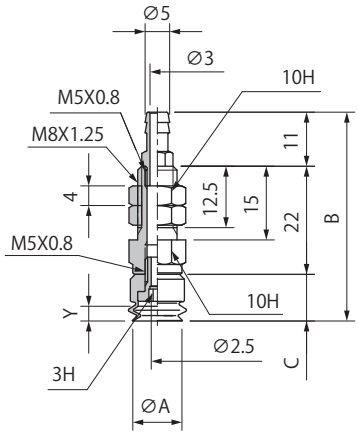

Model number	A	B	C	Y	Weight (g)
PJTK-10- □	10	42.5	9.5	3	14
PJTK-15- □	15	44	11	4.5	15
PJTK-20- □	20	46	13	5.5	17
PJTK-25- □	25	48.5	15.5	6.5	19

※□ in the table indicates the cup material.
※ The weight value is when NBR (Nitrile rubber) selected.

Top Port PJTK-30/35/40

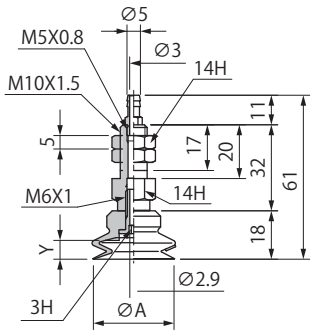

Model number	A	Y	Weight (g)
PJTK-30- □	30	7	42
PJTK-35- □	35		44
PJTK-40- □	40	7.2	

※□ in the table indicates the cup material.
※ The weight value is when NBR (Nitrile rubber) selected.

Top Port PJTK-50

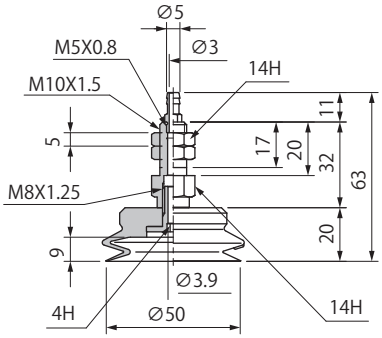

Model number	Weight (g)
PJTK-50- □	58

※□ in the table indicates the cup material.
※ The weight value is when NBR (Nitrile rubber) selected.

Top Port PJTK-60/70/80

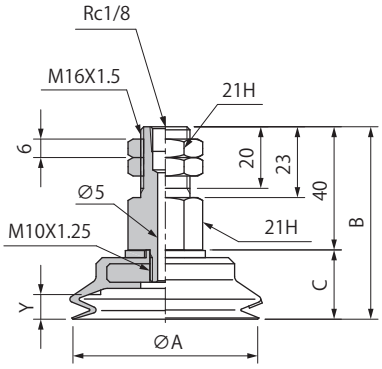

Model number	A	B	C	Y	Weight (g)
PJTK-60- □	60	62.5	22.5	8	144
PJTK-70- □	70	63.5	23.5	9.5	163
PJTK-80- □	80				190

※□ in the table indicates the cup material.
※ The weight value is when NBR (Nitrile rubber) selected.

Dimensions

(mm)

Side Port PJYK-2/4

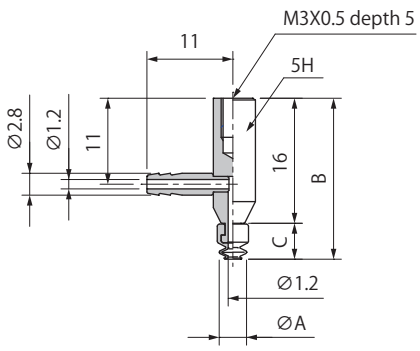

Model number	A	B	C	Weight (g)
PJYK-2- □	2	20.5	4.5	3
PJYK-4- □	4	21.5	5.5	

※□ in the table indicates the cup material.
※ The weight value is when NBR (Nitrile rubber) selected.

Side Port PJYK-6/8

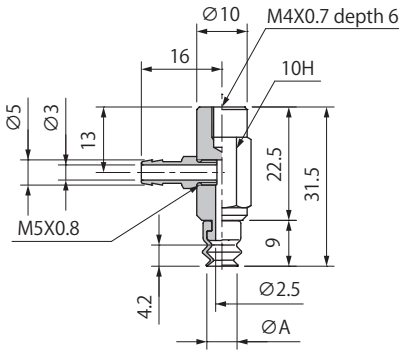

Model number	A	Weight (g)
PJYK-6- □	6	16
PJYK-8- □	8	

※□ in the table indicates the cup material.
※ The weight value is when NBR (Nitrile rubber) selected.

Side Port PJYK-10/15/20/25

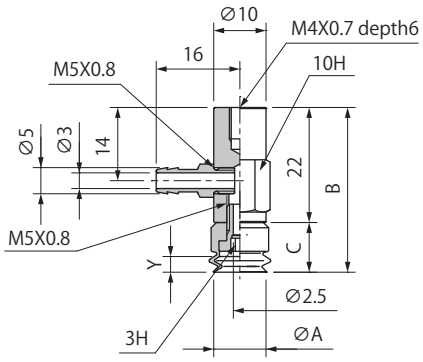

Model number	A	B	C	Y	Weight (g)
PJYK-10- □	10	31.5	9.5	3	17
PJYK-15- □	15	33	11	4.5	18
PJYK-20- □	20	35	13	5.5	20
PJYK-25- □	25	37.5	15.5	6.5	22

※□ in the table indicates the cup material.
※ The weight value is when NBR (Nitrile rubber) selected.

Side Port PJYK-30/35/40

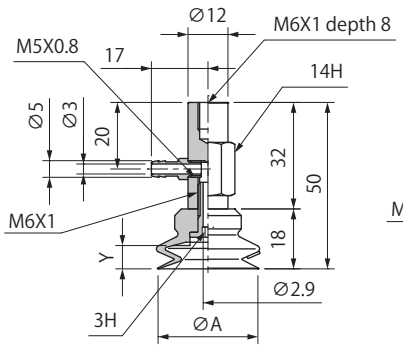

Model number	A	Y	Weight (g)
PJYK-30- □	30	7	46
PJYK-35- □	35		48
PJYK-40- □	40	7.2	

※□ in the table indicates the cup material.
※ The weight value is when NBR (Nitrile rubber) selected.

Side Port PJYK-50

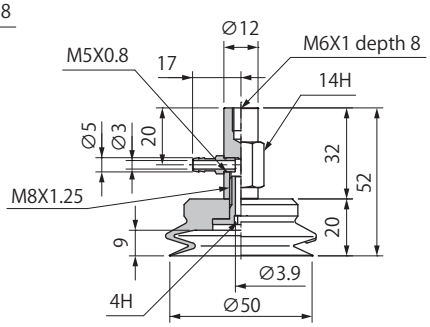

Model number	Weight (g)
PJYK-50- □	62

※□ in the table indicates the cup material.
※ The weight value is when NBR (Nitrile rubber) selected.

Side Port PJYK-60/70/80

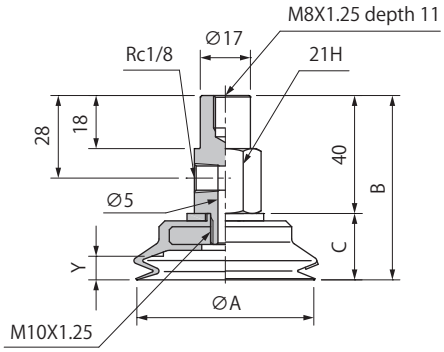

Model number	A	B	C	Y	Weight (g)
PJYK-60- □	60	62.5	22.5	8	139
PJYK-70- □	70	63.5	23.5	9.5	158
PJYK-80- □	80				185

※□ in the table indicates the cup material.
※ The weight value is when NBR (Nitrile rubber) selected.

PSS Cup with Compact Spring Fitting

Simple construction of the cup and the fitting.

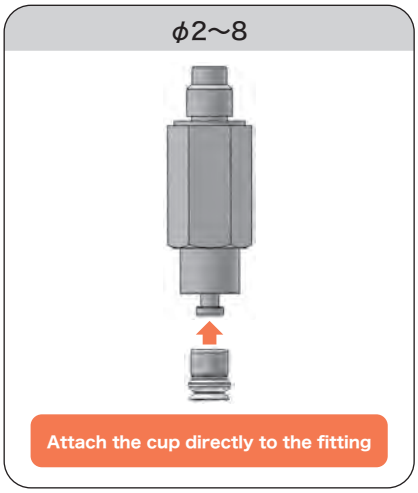

How to Order

PSS – L3 – PJG – 6 – N

① ② ③

① Stroke (mm)

Symbol	Length	Applicable cup size
S3	3	ϕ2, 4
L3	3	ϕ6, 8
S5	5	ϕ2, 4
L5	5	ϕ6, 8

② Cup Size (mm)

Symbol	Cup size
2	ϕ2
4	ϕ4
6	ϕ6
8	ϕ8

③ Cup Rubber Material

Symbol	Material
N	NBR(Nitrile rubber)
S	Silicone rubber
U	Urethane rubber
F	Fluorine rubber
NE	Conductive NBR (Nitrile rubber)
SE	Conductive silicone rubber

※Please consult with us for other material.

Combination Table

Model number	Cup	Fitting	Piping specifications
PSS-S3-PJG-2- □	PJG-2- □	PSS-S3	M5X0.8 (Male)
PSS-S3-PJG-4- □	PJG-4- □		
PSS-S5-PJG-2- □	PJG-2- □	PSS-S5	
PSS-S5-PJG-4- □	PJG-4- □		
PSS-L3-PJG-6- □	PJG-6- □	PSS-L3	
PSS-L3-PJG-8- □	PJG-8- □		
PSS-L5-PJG-6- □	PJG-6- □	PSS-L5	
PSS-L5-PJG-8- □	PJG-8- □		

※□ in the table indicates the cup material.

Spring Specifications

Cup size	Unit	ϕ2~ϕ8	
Stroke	mm	3	5
Spring load at 0 stroke	N	1.5	1.62
Spring load at full stroke	N	2.3	3.2
Tightening torque	N・m	0.58~0.68	

※Due to structural reason, 「lift-up」 may occur in case vacuum pressure is more than -65kPa.
The weight of non 「lift-up」 in horizontal lifting is about over 200g.
Screw must be tightened in recommended tightening torque, otherwise malfunction would occur.

Dimensions

(mm)

PSS-S3-2/4

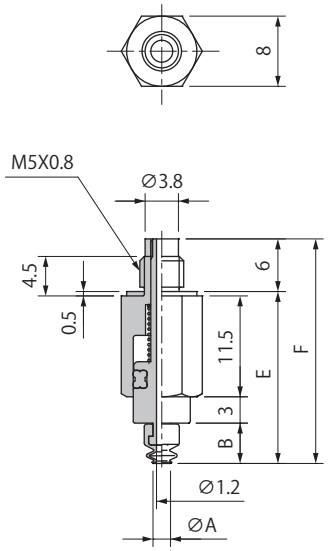

Model number	A	B	E	F	Weight (g)
PSS-S3-PJG-2-□	2	4.5	19.5	25.5	3
PSS-S3-PJG-4-□	4	5.5	20.5	26.5	

※□ in the table indicates the cup material.
※ The weight value is when NBR (Nitrile rubber) selected.

PSS-S5-2/4

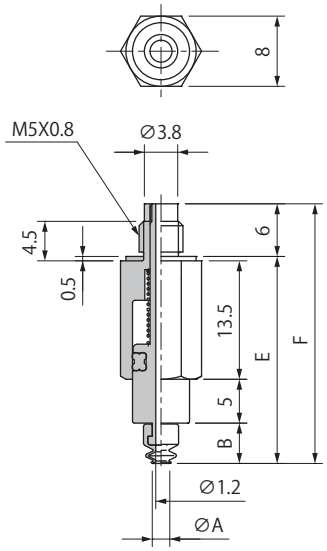

Model number	A	B	E	F	Weight (g)
PSS-S5-PJG-2-□	2	4.5	23.5	29.5	3
PSS-S5-PJG-4-□	4	5.5	24.5	30.5	

※□ in the table indicates the cup material.
※ The weight value is when NBR (Nitrile rubber) selected.

PSS-L3-6/8

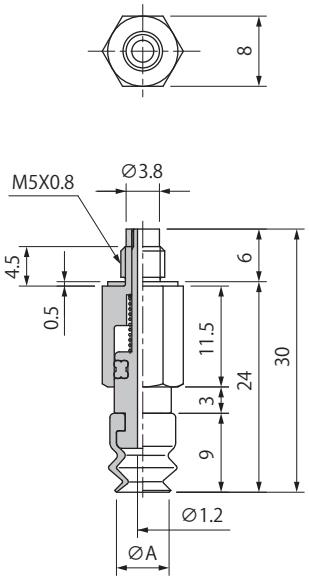

Model number	A	Weight (g)
PSS-L3-PJG-6-□	6	6
PSS-L3-PJG-8-□	8	

※□ in the table indicates the cup material.
※ The weight value is when NBR (Nitrile rubber) selected.

PSS-L5-6/8

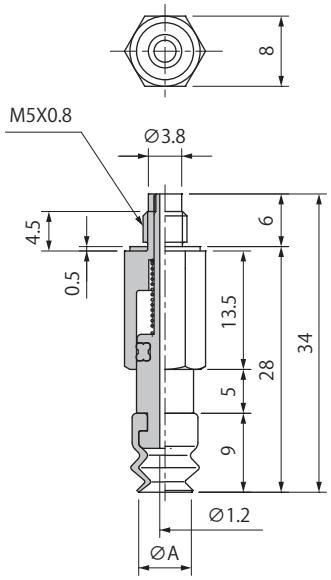

Model number	A	Weight (g)
PSS-L5-PJG-6-□	6	7
PSS-L5-PJG-8-□	8	

※□ in the table indicates the cup material.
※ The weight value is when NBR (Nitrile rubber) selected.

NAPJTS·YS Cup with Spring Fitting

Consisting of fitting, setting screw, suction cup.

ϕ2~8

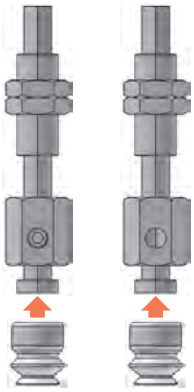

Attach the cup directly to the fitting

ϕ20~50

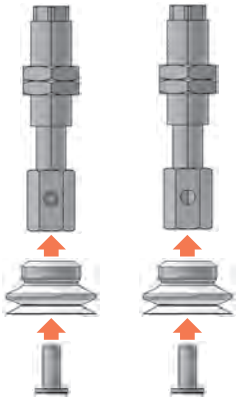

Attach the cup to the fitting with setting screw

ϕ60~80

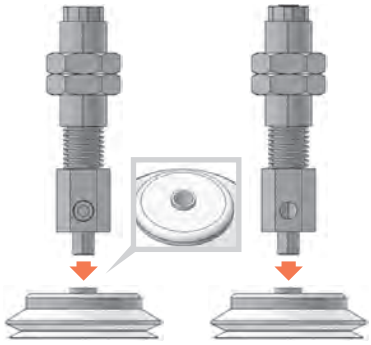

Screw the fitting directly into the female screw in the cup

How to Order

NAPJ **T** S – **6-3** – **N** – **T**

① ② ③ ④

① Vacuum Port

T	Top
Y	Side

② Cup Size - Stroke (mm)

Symbol	Cup size Stroke	Symbol	Cup size Stroke	Symbol	Cup size Stroke
2-3	ϕ2-3	20-6	ϕ20-6	50-6	ϕ50-6
2-6	ϕ2-6	20-15	ϕ20-15	50-15	ϕ50-15
4-3	ϕ4-3	20-30	ϕ20-30	50-30	ϕ50-30
4-6	ϕ4-6	25-6	ϕ25-6	60-10	ϕ60-10
6-3	ϕ6-3	25-15	ϕ25-15	60-30	ϕ60-30
6-6	ϕ6-6	25-30	ϕ25-30	60-50	ϕ60-50
8-3	ϕ8-3	30-6	ϕ30-6	70-10	ϕ70-10
8-6	ϕ8-6	30-15	ϕ30-15	70-30	ϕ70-30
10-3	ϕ10-3	30-30	ϕ30-30	70-50	ϕ70-50
10-10	ϕ10-10	35-6	ϕ35-6	80-10	ϕ80-10
10-15	ϕ10-15	35-15	ϕ35-15	80-30	ϕ80-30
15-3	ϕ15-3	35-30	ϕ35-30	80-50	ϕ80-50
15-10	ϕ15-10	40-6	ϕ40-6		
15-15	ϕ15-15	40-15	ϕ40-15		
		40-30	ϕ40-30		

③ Cup Rubber Material

Symbol	Material
N	NBR(Nitrile rubber)
S	Silicone rubber
U	Urethane rubber
F	Fluorine rubber
NE	Conductive NBR (Nitrile rubber)
SE	Conductive silicone rubber

※Please consult with us for other material.

④ Connector

Blank	N/A
T	Barb
O	Push-in

※ϕ 60 or more can not be selected "T" and "O"

Spring Specifications

Cup size	Unit	ϕ2, 4		ϕ6, 8		ϕ10, 15			ϕ20~50			ϕ60~80		
Stroke	mm	3	6	3	6	3	10	15	6	15	30	10	30	50
Spring load at 0 stroke	N	0.5		0.49		0.61		0.64	2.45		2.9	8.82	6.76	8.33
Spring load at full stroke	N	0.6	0.7	0.59	0.69	0.77	1.17		3.43	4.9	5.88	11.8	15.6	19.6

Combination Table

Model number	Cup	Setting screw	Fitting	Piping specifications		
				Without connector・blank	Barb connector・T	Push-in connector・O
NAPJ○S-2-3-□ (-T/O)	PJG-2-□	Attach the cup directly to the fitting	NAPF○S-1.5A-3-K (-T/O)	M3X0.5 (Female)	ϕ 4X2.5	
NAPJ○S-2-6-□ (-T/O)			NAPF○S-1.5A-6-K (-T/O)			
NAPJ○S-4-3-□ (-T/O)	PJG-4-□		NAPF○S-1.5A-3-K (-T/O)			
NAPJ○S-4-6-□ (-T/O)			NAPF○S-1.5A-6-K (-T/O)			
NAPJ○S-6-3-□ (-T/O)	PJG-6-□		NAPF○S-5A-3-K (-T/O)			
NAPJ○S-6-6-□ (-T/O)			NAPF○S-5A-6-K (-T/O)			
NAPJ○S-8-3-□ (-T/O)	PJG-8-□		NAPF○S-5A-3-K (-T/O)			
NAPJ○S-8-6-□ (-T/O)			NAPF○S-5A-6-K (-T/O)			
NAPJ○S-10-3-□ (-T/O)	PJG-10-□	TN-PF-15-M5	NAPC○S-10-3-K (-T/O)	M5X0.8 (Female)	ϕ 6 X 4	
NAPJ○S-10-10-□ (-T/O)			NAPC○S-10-10-K (-T/O)			
NAPJ○S-10-15-□ (-T/O)			NAPC○S-10-15-K (-T/O)			
NAPJ○S-15-3-□ (-T/O)	PJG-15-□		NAPC○S-10-3-K (-T/O)			
NAPJ○S-15-10-□ (-T/O)			NAPC○S-10-10-K (-T/O)			
NAPJ○S-15-15-□ (-T/O)			NAPC○S-10-15-K (-T/O)			
NAPJ○S-20-6-□ (-T/O)	PJG-20-□	TN-PF-20-M5	NAPB○S-20-6-K (-T/O)			
NAPJ○S-20-15-□ (-T/O)			NAPB○S-20-15-K (-T/O)			
NAPJ○S-20-30-□ (-T/O)			NAPB○S-20-30-K (-T/O)			
NAPJ○S-25-6-□ (-T/O)	PJG-25-□		NAPB○S-20-6-K (-T/O)			
NAPJ○S-25-15-□ (-T/O)			NAPB○S-20-15-K (-T/O)			
NAPJ○S-25-30-□ (-T/O)			NAPB○S-20-30-K (-T/O)			
NAPJ○S-30-6-□ (-T/O)	PJG-30-□	TN-PF-25-M6	NAPF○S-20B-6-K (-T/O)			
NAPJ○S-30-15-□ (-T/O)			NAPF○S-20B-15-K (-T/O)			
NAPJ○S-30-30-□ (-T/O)			NAPF○S-20B-30-K (-T/O)			
NAPJ○S-35-6-□ (-T/O)	PJG-35-□		NAPF○S-20B-6-K (-T/O)			
NAPJ○S-35-15-□ (-T/O)			NAPF○S-20B-15-K (-T/O)			
NAPJ○S-35-30-□ (-T/O)			NAPF○S-20B-30-K (-T/O)			
NAPJ○S-40-6-□ (-T/O)	PJG-40-□		NAPF○S-20B-6-K (-T/O)			
NAPJ○S-40-15-□ (-T/O)			NAPF○S-20B-15-K (-T/O)			
NAPJ○S-40-30-□ (-T/O)			NAPF○S-20B-30-K (-T/O)			
NAPJ○S-50-6-□ (-T/O)	PJG-50-□	TN-PF-50-M6	NAPF○S-20B-6-K (-T/O)			
NAPJ○S-50-15-□ (-T/O)			NAPF○S-20B-15-K (-T/O)			
NAPJ○S-50-30-□ (-T/O)			NAPF○S-20B-30-K (-T/O)			
NAPJ○S-60-10-□	PJG-60-□	Screw the fitting directly into the female screw in the cup	NAPF○S-60-10-K	Rc1/8 (Female)	-	
NAPJ○S-60-30-□			NAPF○S-60-30-K			
NAPJ○S-60-50-□			NAPF○S-60-50-K			
NAPJ○S-70-10-□	PJG-70-□		NAPF○S-60-10-K			
NAPJ○S-70-30-□			NAPF○S-60-30-K			
NAPJ○S-70-50-□			NAPF○S-60-50-K			
NAPJ○S-80-10-□	PJG-80-□		NAPF○S-60-10-K			
NAPJ○S-80-30-□			NAPF○S-60-30-K			
NAPJ○S-80-50-□			NAPF○S-60-50-K			

※□ in the table indicates the cup material.
※○ in the table indicates the vacuum port (T or Y).
※ The mounting torque of the H8 nut for NAPF○S-5A-3/6-K (-T/O) should be 2.0 N・m or less.

NAPJTS•YS Cup with Spring Fitting

Dimensions

(mm)

NAPJT/YS-2/4

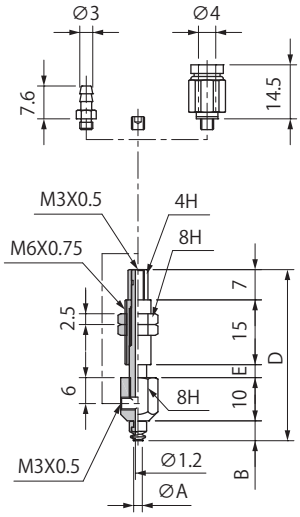

Model number	A	B	D	E	Weight (g)
NAPJT/YS-2-3-□ (-T/O)	2	4.5	39.5	3	6
NAPJT/YS-2-6-□ (-T/O)			42.5	6	
NAPJT/YS-4-3-□ (-T/O)	4	5.5	40.5	3	
NAPJT/YS-4-6-□ (-T/O)			43.5	6	

※□ in the table indicates the cup material.
※ The weight value is when NBR (Nitrile rubber) / without connector selected.

NAPJT/YS-6/8

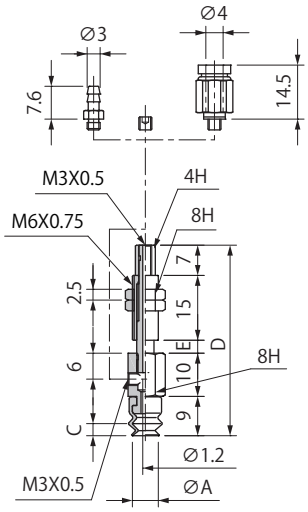

Model number	A	C	D	E	Weight (g)
NAPJT/YS-6-3-□ (-T/O)	6	4.2	44	3	7
NAPJT/YS-6-6-□ (-T/O)			47	6	
NAPJT/YS-8-3-□ (-T/O)	8	4	44	3	
NAPJT/YS-8-6-□ (-T/O)			47	6	

※□ in the table indicates the cup material.
※ The weight value is when NBR (Nitrile rubber) / without connector selected.

NAPJT/YS-10

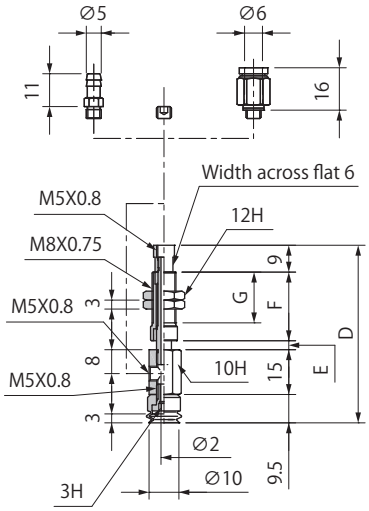

Model number	D	E	F	G	Weight (g)
NAPJT/YS-10-3-□ (-T/O)	59.5	3	23	17	30.5
NAPJT/YS-10-10-□ (-T/O)	66.5	10			31
NAPJT/YS-10-15-□ (-T/O)	79	15	30.5	24.5	33.5

※□ in the table indicates the cup material.
※ The weight value is when NBR (Nitrile rubber) / without connector selected.

NAPJT/YS-15

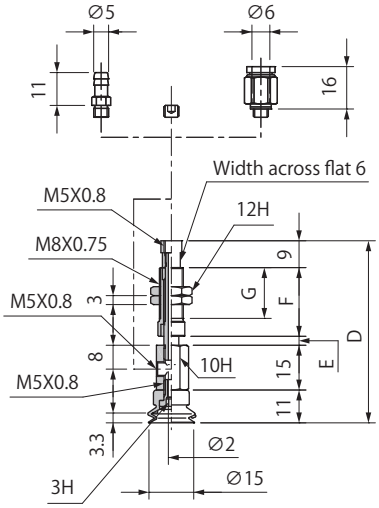

Model number	D	E	F	G	Weight (g)
NAPJT/YS-15-3-□ (-T/O)	61	3	23	17	31.5
NAPJT/YS-15-10-□ (-T/O)	68	10			32
NAPJT/YS-15-15-□ (-T/O)	80.5	15	30.5	24.5	34.5

※□ in the table indicates the cup material.
※ The weight value is when NBR (Nitrile rubber) / without connector selected.

Common Specifications

Connector Weight(g)

Symbol	Tube O.D ϕ 4	Tube O.D ϕ 6
T	0.5	1.5
O	3.0	4.0

Dimensions

(mm)

NAPJT/YS-20

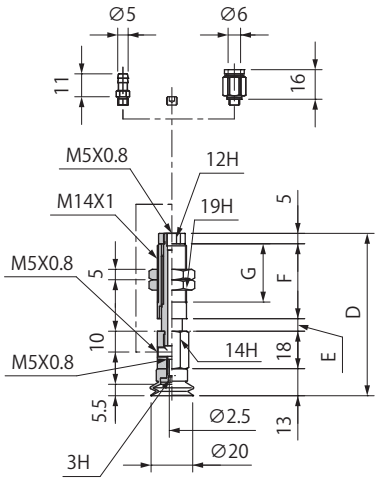

Model number	D	E	F	G	Weight (g)
NAPJT/YS-20-6-□ (-T/O)	78	6	36	28	66
NAPJT/YS-20-15-□ (-T/O)	87	15			71
NAPJT/YS-20-30-□ (-T/O)	124	30	58	50	96

※□ in the table indicates the cup material.
※ The weight value is when NBR（Nitrile rubber）/ without connector selected.

NAPJT/YS-25

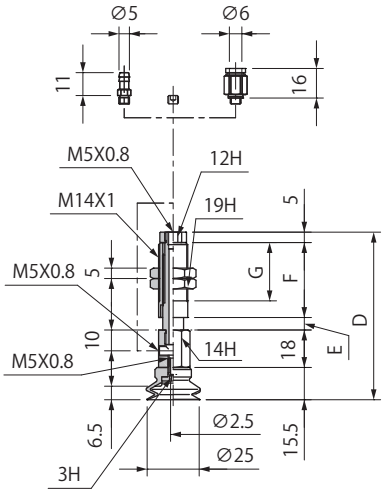

Model number	D	E	F	G	Weight (g)
NAPJT/YS-25-6-□ (-T/O)	80.5	6	36	28	68
NAPJT/YS-25-15-□ (-T/O)	89.5	15			73
NAPJT/YS-25-30-□ (-T/O)	126.5	30	58	50	98

※□ in the table indicates the cup material.
※ The weight value is when NBR（Nitrile rubber）/ without connector selected.

NAPJT/YS-30

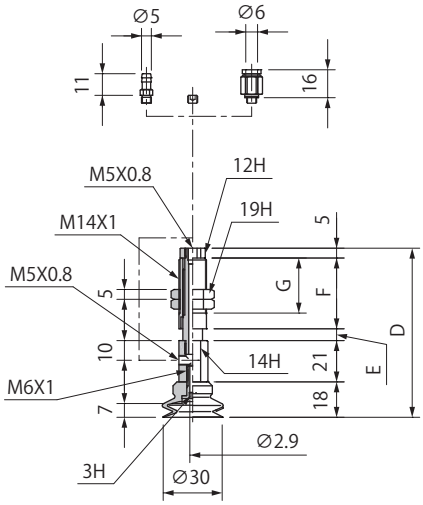

Model number	D	E	F	G	Weight (g)
NAPJT/YS-30-6-□ (-T/O)	86	6	36	28	69
NAPJT/YS-30-15-□ (-T/O)	95	15			74
NAPJT/YS-30-30-□ (-T/O)	132	30	58	50	99

※□ in the table indicates the cup material.
※ The weight value is when NBR（Nitrile rubber）/ without connector selected.

NAPJT/YS-35

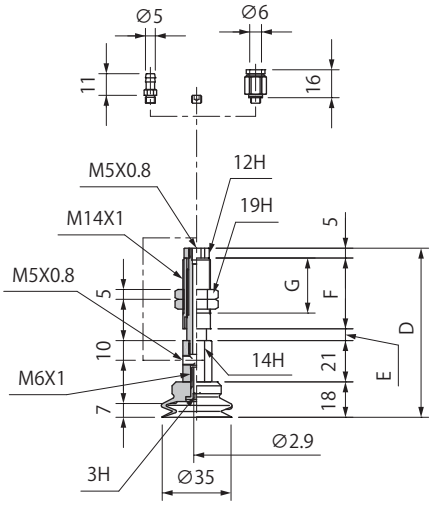

Model number	D	E	F	G	Weight (g)
NAPJT/YS-35-6-□ (-T/O)	86	6	36	28	71.5
NAPJT/YS-35-15-□ (-T/O)	95	15			76.5
NAPJT/YS-35-30-□ (-T/O)	132	30	58	50	101.5

※□ in the table indicates the cup material.
※ The weight value is when NBR（Nitrile rubber）/ without connector selected.

Common Specifications

Connector Weight(g)

Symbol	Tube O.D ϕ 6
T	1.5
O	4.0

NAPJTS•YS Cup with Spring Fitting

Dimensions

(mm)

NAPJT/YS-40

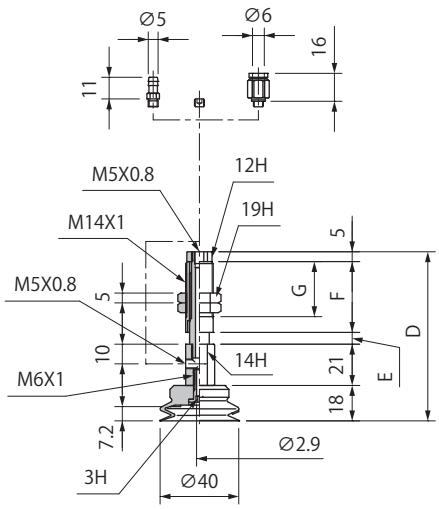

Model number	D	E	F	G	Weight (g)
NAPJT/YS-40-6-□ (-T/O)	86	6	36	28	73.5
NAPJT/YS-40-15-□ (-T/O)	95	15			78.5
NAPJT/YS-40-30-□ (-T/O)	132	30	58	50	103.5

※□ in the table indicates the cup material.
※ The weight value is when NBR (Nitrile rubber) / without connector selected.

NAPJT/YS-50

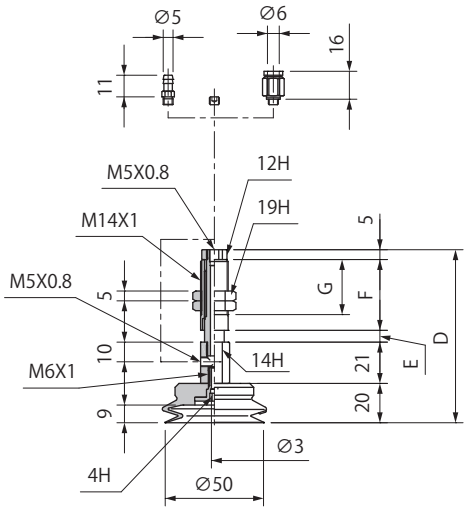

Model number	D	E	F	G	Weight (g)
NAPJT/YS-50-6-□ (-T/O)	88	6	36	28	89
NAPJT/YS-50-15-□ (-T/O)	97	15			94
NAPJT/YS-50-30-□ (-T/O)	134	30	58	50	119

※□ in the table indicates the cup material.
※ The weight value is when NBR (Nitrile rubber) / without connector selected.

NAPJT/YS-60

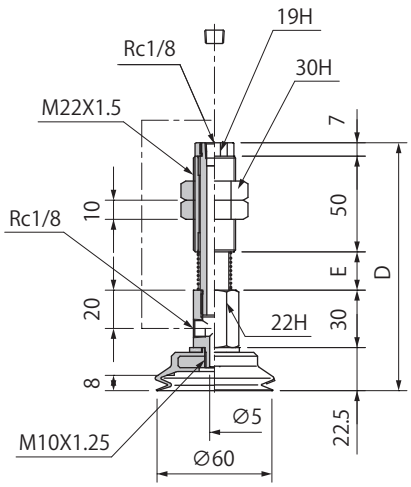

Model number	D	E	Weight (g)
NAPJT/YS-60-10-□	129.5	20	294
NAPJT/YS-60-30-□	159.5	50	328
NAPJT/YS-60-50-□	184.5	75	355

※□ in the table indicates the cup material.
※ The weight value is when NBR (Nitrile rubber) selected.

NAPJT/YS-70

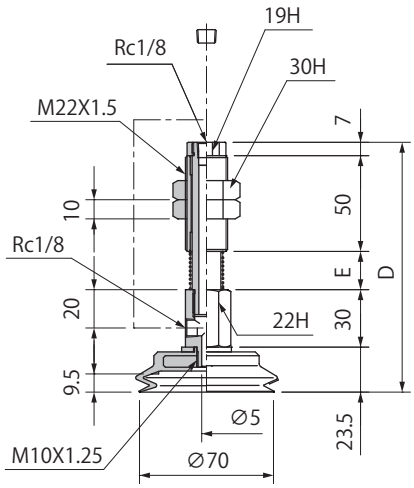

Model number	D	E	Weight (g)
NAPJT/YS-70-10-□	130.5	20	309
NAPJT/YS-70-30-□	160.5	50	346
NAPJT/YS-70-50-□	185.5	75	370

※□ in the table indicates the cup material.
※ The weight value is when NBR (Nitrile rubber) selected.

Common Specifications

Connector Weight(g)

Model Number	Tube O.D ϕ 6
T	1.5
O	4.0

Dimensions

(mm)

NAPJT/YS-80

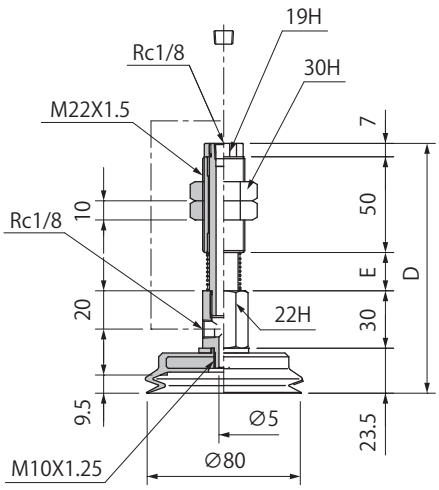

Model number	D	E	Weight (g)
NAPJT/YS-80-10-□	130.5	20	338
NAPJT/YS-80-30-□	160.5	50	372
NAPJT/YS-80-50-□	185.5	75	399

※□ in the table indicates the cup material.
※ The weight value is when NBR（Nitrile rubber）selected.

NAPJTH•YH Cup with Non-rotation Spring Fitting

Consisting of fitting, setting screw, suction cup.

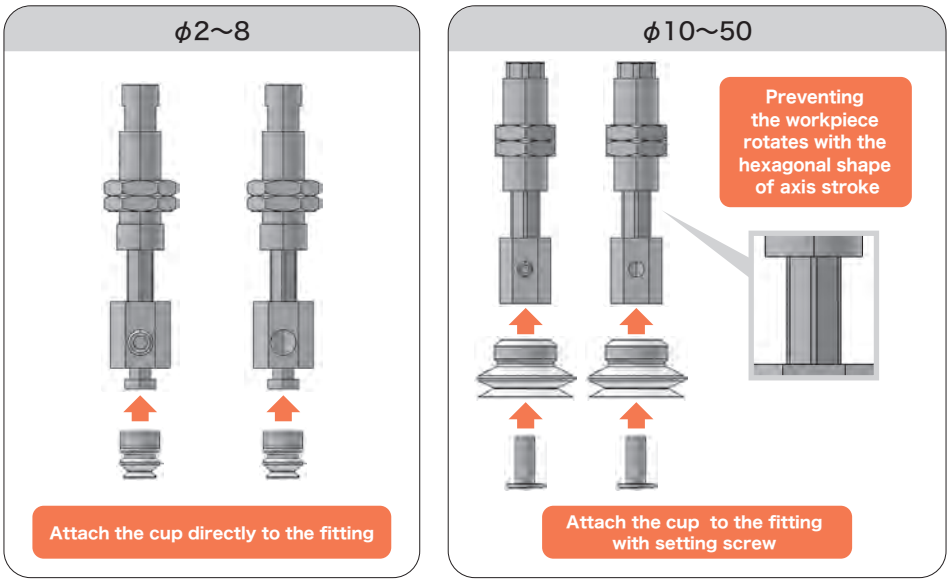

How to Order

NAPJ T H – 6-3 – N – T

① ② ③ ④

① Vacuum Port

T	Top
Y	Side

② Cup Size - Stroke (mm)

Symbol	Cup size Stroke	Symbol	Cup size Stroke	Symbol	Cup size Stroke
2-3	ϕ2-3	15-3	ϕ15-3	35-6	ϕ35-6
2-10	ϕ2-10	15-10	ϕ15-10	35-15	ϕ35-15
2-15	ϕ2-15	15-15	ϕ15-15	35-30	ϕ35-30
4-3	ϕ4-3	20-6	ϕ20-6	40-6	ϕ40-6
4-10	ϕ4-10	20-15	ϕ20-15	40-15	ϕ40-15
4-15	ϕ4-15	20-30	ϕ20-30	40-30	ϕ40-30
6-3	ϕ6-3	25-6	ϕ25-6	50-6	ϕ50-6
6-10	ϕ6-10	25-15	ϕ25-15	50-15	ϕ50-15
6-15	ϕ6-15	25-30	ϕ25-30	50-30	ϕ50-30
8-3	ϕ8-3	30-6	ϕ30-6		
8-10	ϕ8-10	30-15	ϕ30-15		
8-15	ϕ8-15	30-30	ϕ30-30		
10-3	ϕ10-3				
10-10	ϕ10-10				
10-15	ϕ10-15				

③ Cup Rubber Material

Symbol	Material
N	NBR(Nitrile rubber)
S	Silicone rubber
U	Urethane rubber
F	Fluorine rubber
NE	Conductive NBR (Nitrile rubber)
SE	Conductive silicone rubber

※Please consult with us for other material.

④ Connector

Blank	N/A
T	Barb
O	Push-in

Spring Specifications

Cup size	Unit	ϕ2, 4			ϕ6～15			ϕ20～50		
Stroke	mm	3	10	15	3	10	15	6	15	30
Spring load at 0 stroke	N	0.3	0.5	0.3	0.61		0.64	2.45		2.9
Spring load at full stroke	N	0.4	0.8		0.77	1.17		3.43	4.9	5.88

Combination Table

Model number	Cup	Setting screw	Fitting	Piping specifications		
				Without connector・Blank	Barb connector・T	Push-in connector・O
NAPJ○H-2-3-□ (-T/O)	PJG-2-□	Attach the cup directly to the fitting	NAPF○H-1.5A-3-K (-T/O)	M3X0.5 (Female)	ϕ 4 X 2.5	
NAPJ○H-2-10-□ (-T/O)			NAPF○H-1.5A-10-K (-T/O)			
NAPJ○H-2-15-□ (-T/O)			NAPF○H-1.5A-15-K (-T/O)			
NAPJ○H-4-3-□ (-T/O)	PJG-4-□		NAPF○H-1.5A-3-K (-T/O)			
NAPJ○H-4-10-□ (-T/O)			NAPF○H-1.5A-10-K (-T/O)			
NAPJ○H-4-15-□ (-T/O)			NAPF○H-1.5A-15-K (-T/O)			
NAPJ○H-6-3-□ (-T/O)	PJG-6-□		NAPF○H-5A-3-K (-T/O)	M5X0.8 (Female)	ϕ 6 X 4	
NAPJ○H-6-10-□ (-T/O)			NAPF○H-5A-10-K (-T/O)			
NAPJ○H-6-15-□ (-T/O)			NAPF○H-5A-15-K (-T/O)			
NAPJ○H-8-3-□ (-T/O)	PJG-8-□		NAPF○H-5A-3-K (-T/O)			
NAPJ○H-8-10-□ (-T/O)			NAPF○H-5A-10-K (-T/O)			
NAPJ○H-8-15-□ (-T/O)			NAPF○H-5A-15-K (-T/O)			
NAPJ○H-10-3-□ (-T/O)	PJG-10-□	TN-PF-15-M5	NAPC○H-10-3-K (-T/O)			
NAPJ○H-10-10-□ (-T/O)			NAPC○H-10-10-K (-T/O)			
NAPJ○H-10-15-□ (-T/O)			NAPC○H-10-15-K (-T/O)			
NAPJ○H-15-3-□ (-T/O)	PJG-15-□		NAPC○H-10-3-K (-T/O)			
NAPJ○H-15-10-□ (-T/O)			NAPC○H-10-10-K (-T/O)			
NAPJ○H-15-15-□ (-T/O)			NAPC○H-10-15-K (-T/O)			
NAPJ○H-20-6-□ (-T/O)	PJG-20-□	TN-PF-20-M5	NAPB○H-20-6-K (-T/O)			
NAPJ○H-20-15-□ (-T/O)			NAPB○H-20-15-K (-T/O)			
NAPJ○H-20-30-□ (-T/O)			NAPB○H-20-30-K (-T/O)			
NAPJ○H-25-6-□ (-T/O)	PJG-25-□		NAPB○H-20-6-K (-T/O)			
NAPJ○H-25-15-□ (-T/O)			NAPB○H-20-15-K (-T/O)			
NAPJ○H-25-30-□ (-T/O)			NAPB○H-20-30-K (-T/O)			
NAPJ○H-30-6-□ (-T/O)	PJG-30-□	TN-PF-25-M6	NAPF○H-20B-6-K (-T/O)			
NAPJ○H-30-15-□ (-T/O)			NAPF○H-20B-15-K (-T/O)			
NAPJ○H-30-30-□ (-T/O)			NAPF○H-20B-30-K (-T/O)			
NAPJ○H-35-6-□ (-T/O)	PJG-35-□		NAPF○H-20B-6-K (-T/O)			
NAPJ○H-35-15-□ (-T/O)			NAPF○H-20B-15-K (-T/O)			
NAPJ○H-35-30-□ (-T/O)			NAPF○H-20B-30-K (-T/O)			
NAPJ○H-40-6-□ (-T/O)	PJG-40-□		NAPF○H-20B-6-K (-T/O)			
NAPJ○H-40-15-□ (-T/O)			NAPF○H-20B-15-K (-T/O)			
NAPJ○H-40-30-□ (-T/O)			NAPF○H-20B-30-K (-T/O)			
NAPJ○H-50-6-□ (-T/O)	PJG-50-□	TN-PF-50-M6	NAPF○H-20B-6-K (-T/O)			
NAPJ○H-50-15-□ (-T/O)			NAPF○H-20B-15-K (-T/O)			
NAPJ○H-50-30-□ (-T/O)			NAPF○H-20B-30-K (-T/O)			

※□ in the table indicates the cup material.
※○ in the table indicates the vacuum port (T or Y).

NAPJTH•YH Cup with Non-rotation Spring Fitting

Dimensions

(mm)

NAPJT/YH-2

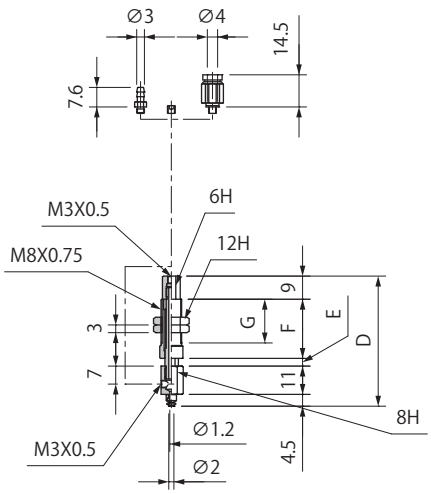

Model number	D	E	F	G	Weight(g)
NAPJT/YH-2-3-□ (-T/O)	50.5	3	23	17	16
NAPJT/YH-2-10-□ (-T/O)	57.5	10			17
NAPJT/YH-2-15-□ (-T/O)	70.5	15	31	25	20

※□ in the table indicates the cup material.
※ The weight value is when NBR (Nitrile rubber) / without connector selected.

NAPJT/YH-4

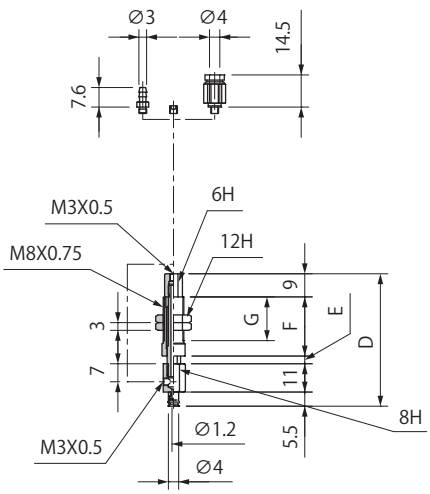

Model number	D	E	F	G	Weight(g)
NAPJT/YH-4-3-□ (-T/O)	51.5	3	23	17	16
NAPJT/YH-4-10-□ (-T/O)	58.5	10			17
NAPJT/YH-4-15-□ (-T/O)	71.5	15	31	25	20

※□ in the table indicates the cup material.
※ The weight value is when NBR (Nitrile rubber) / without connector selected.

NAPJT/YH-6

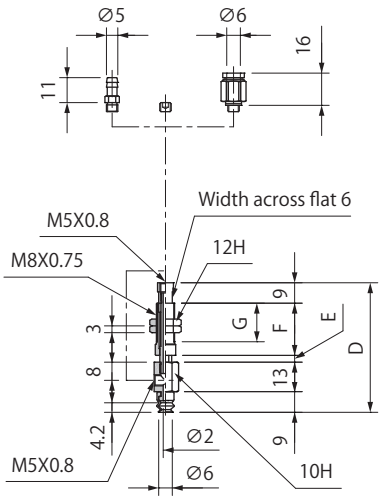

Model number	D	E	F	G	Weight(g)
NAPJT/YH-6-3-□ (-T/O)	57	3	23	17	18.5
NAPJT/YH-6-10-□ (-T/O)	64	10			19
NAPJT/YH-6-15-□ (-T/O)	76.5	15	30.5	24.5	22

※□ in the table indicates the cup material.
※ The weight value is when NBR (Nitrile rubber) / without connector selected.

NAPJT/YH-8

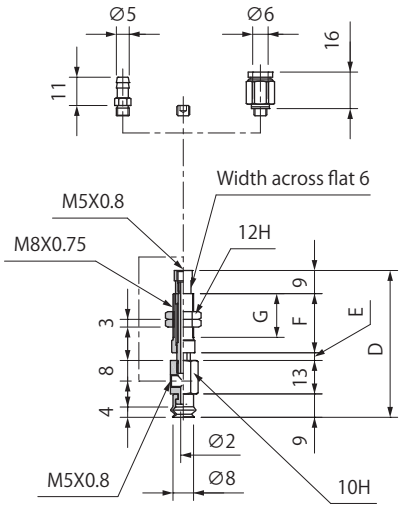

Model number	D	E	F	G	Weight(g)
NAPJT/YH-8-3-□ (-T/O)	57	3	23	17	18.5
NAPJT/YH-8-10-□ (-T/O)	64	10			19
NAPJT/YH-8-15-□ (-T/O)	76.5	15	30.5	24.5	22

※□ in the table indicates the cup material.
※ The weight value is when NBR (Nitrile rubber) / without connector selected.

Common Specifications

Connector Weight(g)

Symbol	Tube O.D ϕ 4	Tube O.D ϕ 6
T	0.5	1.5
O	3.0	4.0

Dimensions

(mm)

NAPJT/YH-10

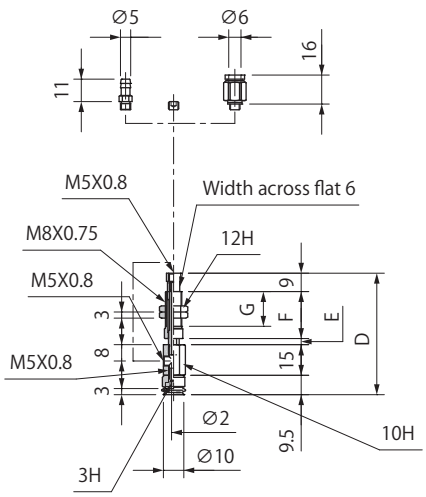

Model number	D	E	F	G	Weight(g)
NAPJT/YH-10-3-□ (-T/O)	59.5	3	23	17	31
NAPJT/YH-10-10-□ (-T/O)	66.5	10			31.5
NAPJT/YH-10-15-□ (-T/O)	79	15	30.5	24.5	34.5

※□ in the table indicates the cup material.
※ The weight value is when NBR（Nitrile rubber）/ without connector selected.

NAPJT/YH-15

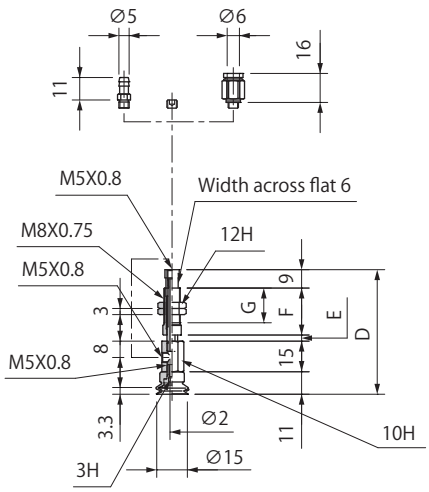

Model number	D	E	F	G	Weight(g)
NAPJT/YH-15-3-□ (-T/O)	61	3	23	17	32
NAPJT/YH-15-10-□ (-T/O)	68	10			32.5
NAPJT/YH-15-15-□ (-T/O)	80.5	15	30.5	24.5	35.5

※□ in the table indicates the cup material.
※ The weight value is when NBR（Nitrile rubber）/ without connector selected.

NAPJT/YH-20

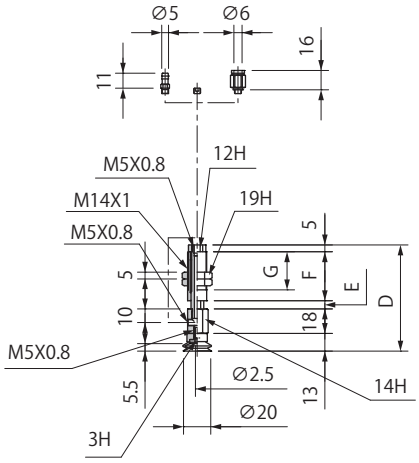

Model number	D	E	F	G	Weight(g)
NAPJT/YH-20-6-□ (-T/O)	78	6	36	28	64.5
NAPJT/YH-20-15-□ (-T/O)	87	15			69.5
NAPJT/YH-20-30-□ (-T/O)	124	30	58	50	93.5

※□ in the table indicates the cup material.
※ The weight value is when NBR（Nitrile rubber）/ without connector selected.

NAPJT/YH-25

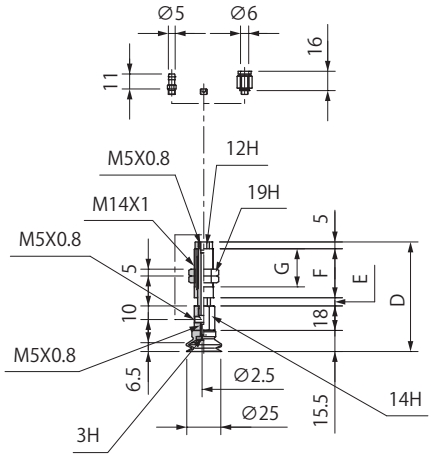

Model number	D	E	F	G	Weight(g)
NAPJT/YH-25-6-□ (-T/O)	80.5	6	36	28	66
NAPJT/YH-25-15-□ (-T/O)	89.5	15			71
NAPJT/YH-25-30-□ (-T/O)	126.5	30	58	50	95

※□ in the table indicates the cup material.
※ The weight value is when NBR（Nitrile rubber）/ without connector selected.

Common Specifications

Connector Weight(g)

Symbol	Tube O.D ϕ 6
T	1.5
O	4.0

NAPJTH•YH Cup with Non-rotation Spring Fitting

Dimensions

(mm)

NAPJT/YH-30

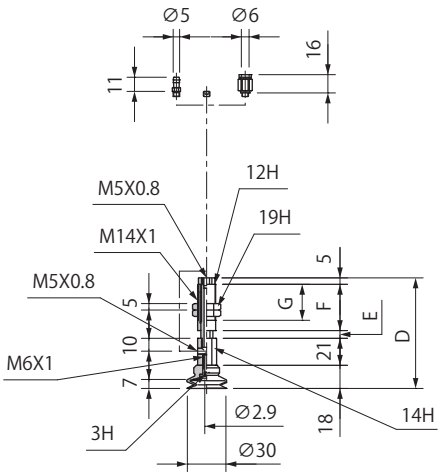

Model number	D	E	F	G	Weight(g)
NAPJT/YH-30-6-□ (-T/O)	86	6	36	28	67.5
NAPJT/YH-30-15-□ (-T/O)	95	15			72.5
NAPJT/YH-30-30-□ (-T/O)	132	30	58	50	96.5

※□ in the table indicates the cup material.
※ The weight value is when NBR (Nitrile rubber) / without connector selected.

NAPJT/YH-35

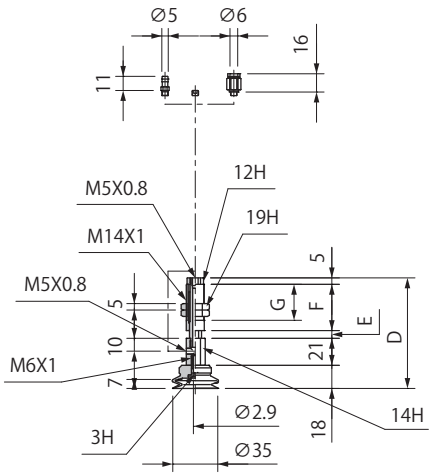

Model number	D	E	F	G	Weight(g)
NAPJT/YH-35-6-□ (-T/O)	86	6	36	28	70
NAPJT/YH-35-15-□ (-T/O)	95	15			75
NAPJT/YH-35-30-□ (-T/O)	132	30	58	50	99

※□ in the table indicates the cup material.
※ The weight value is when NBR (Nitrile rubber) / without connector selected.

NAPJT/YH-40

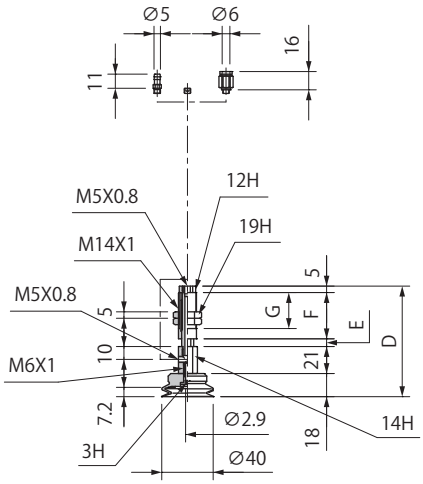

Model number	D	E	F	G	Weight(g)
NAPJT/YH-40-6-□ (-T/O)	86	6	36	28	72
NAPJT/YH-40-15-□ (-T/O)	95	15			77
NAPJT/YH-40-30-□ (-T/O)	132	30	58	50	101

※□ in the table indicates the cup material.
※ The weight value is when NBR (Nitrile rubber) / without connector selected.

NAPJT/YH-50

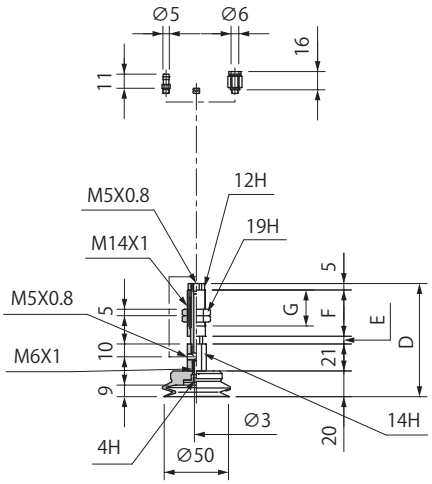

Model number	D	E	F	G	Weight(g)
NAPJT/YH-50-6-□ (-T/O)	88	6	36	28	87.5
NAPJT/YH-50-15-□ (-T/O)	97	15			92.5
NAPJT/YH-50-30-□ (-T/O)	134	30	58	50	116.5

※□ in the table indicates the cup material.
※ The weight value is when NBR (Nitrile rubber) / without connector selected.

Common Specifications

Connector Weight(g)

Symbol	Tube O.D ϕ 6
T	1.5
O	4.0

02
Suction Cup
PA
PB
PC
PCD
PD
PF
PFO
PH
PJ
CORE
PK2
PK2B
PK2L
PL
PN
PN-B
PP
PQ
PR
PU
PW
RA
SM
TN

CORE Mark Free Core for PJG Cup

Attachment for PJG cup
Besides being mark free it also prevents deformation of thin work pieces and adhesion!

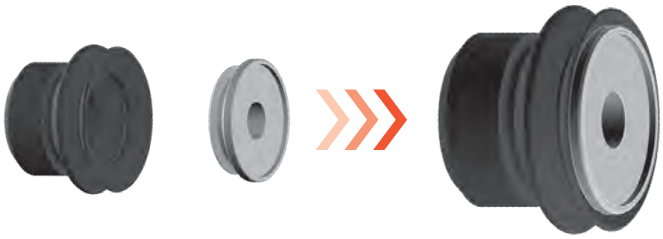

One touch mounting !
Easily mounting to the bellows part of cup (PJG series)

Cross section

The material can be selected from PEEK, POM, SUS.

How to Order

CORE – 06 – S3
① ②

① Applicable Cup Size

Symbol	Applicable cup size	Symbol	Applicable cup size
06	PJG-6	35	PJG-35
08	PJG-8	40	PJG-40
10	PJG-10	50	PJG-50
15	PJG-15	60	PJG-60
20	PJG-20	70	PJG-70
25	PJG-25	80	PJG-80
30	PJG-30		

② Material

Symbol	Material
S3	SUS303
PO	POM
PE	PEEK

Dimensions

(mm)

CORE-06

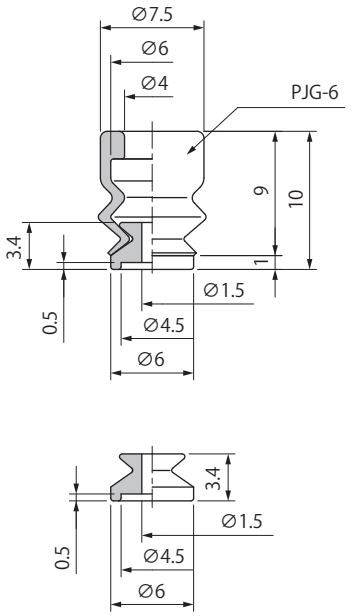

CORE-08

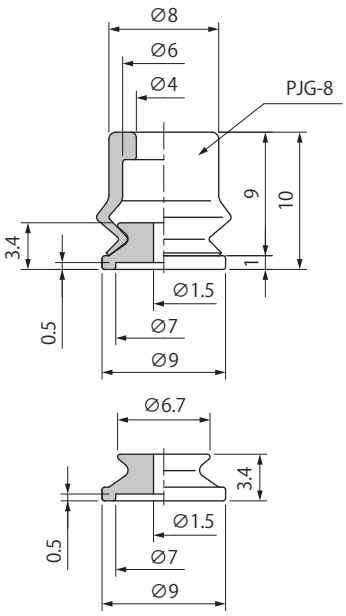

CORE-10

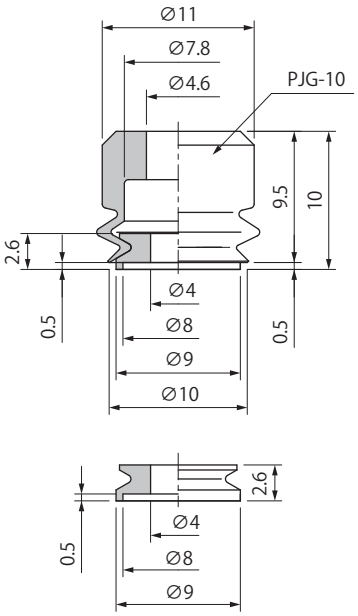

CORE-15

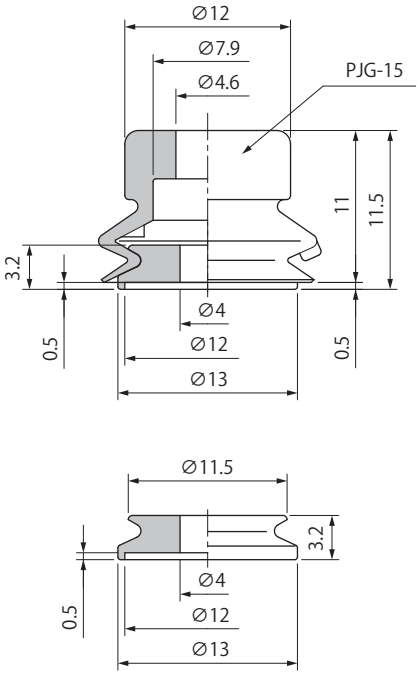

CORE-20

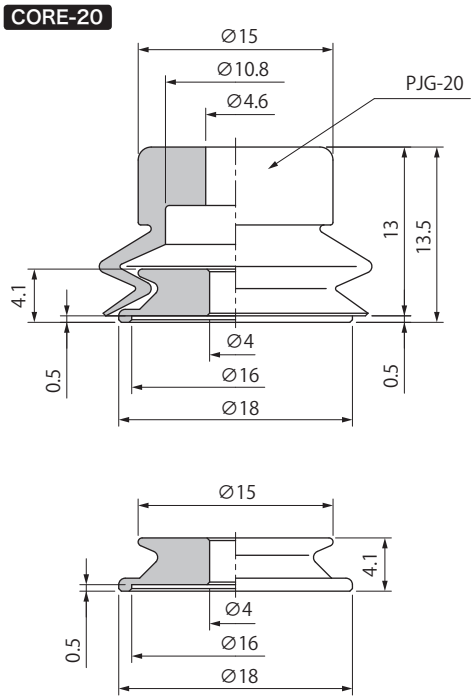

Weight

(g)

Model ＼ Material	S3	PO	PE
CORE-06	0.4	0.1	0.1
CORE-08	0.9	0.2	0.1
CORE-10	0.7	0.1	0.1
CORE-15	1.9	0.3	0.3
CORE-20	4.3	0.8	0.7

Symbol	Material
S3	SUS303
PO	POM
PE	PEEK

CORE Mark Free Core for PJG Cup

Dimensions

(mm)

CORE-25

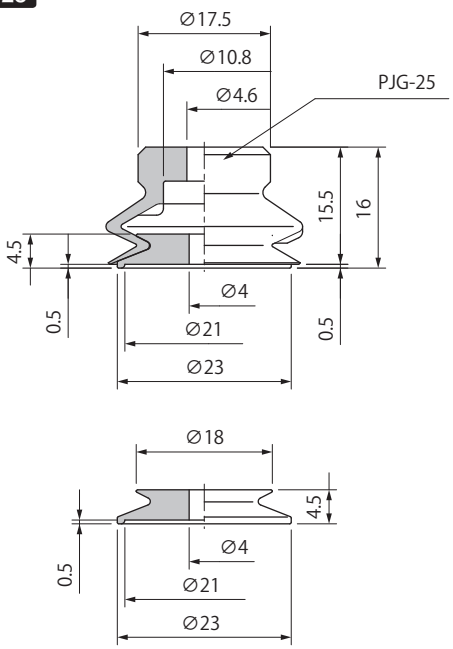

CORE-30

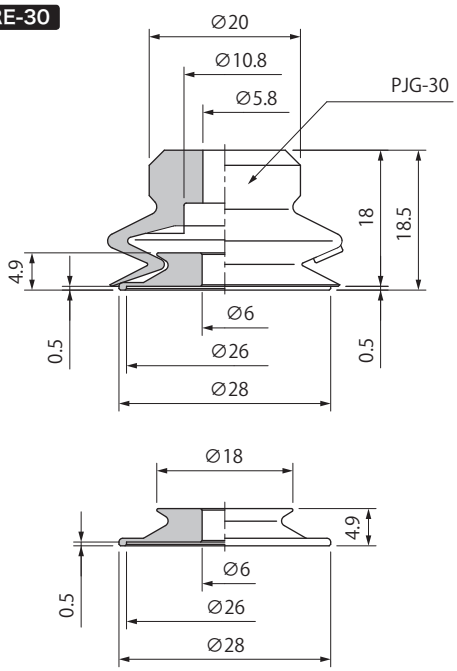

CORE-35

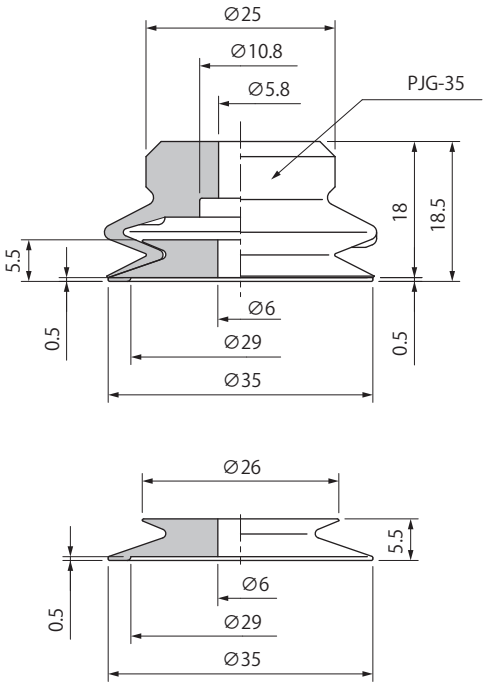

CORE-40

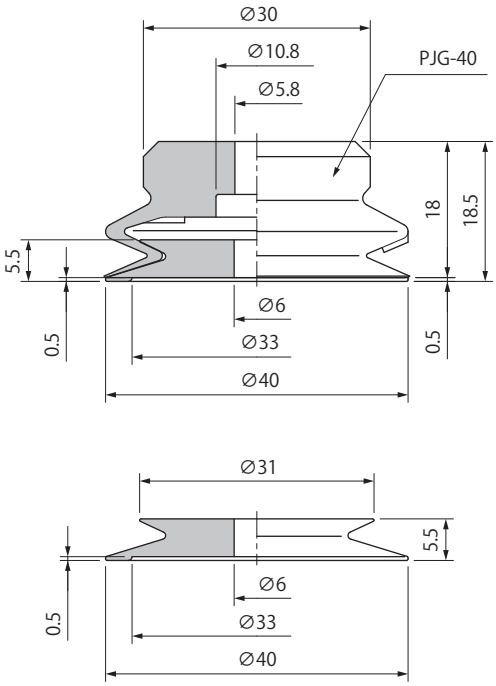

Weight

(g)

Model ＼ Material	S3	PO	PE
CORE-25	7.9	1.4	1.3
CORE-30	9.0	1.6	1.5
CORE-35	19.9	3.5	3.3
CORE-40	28.1	5.0	4.7

Symbol	Material
S3	SUS303
PO	POM
PE	PEEK

Dimensions

(mm)

CORE-50

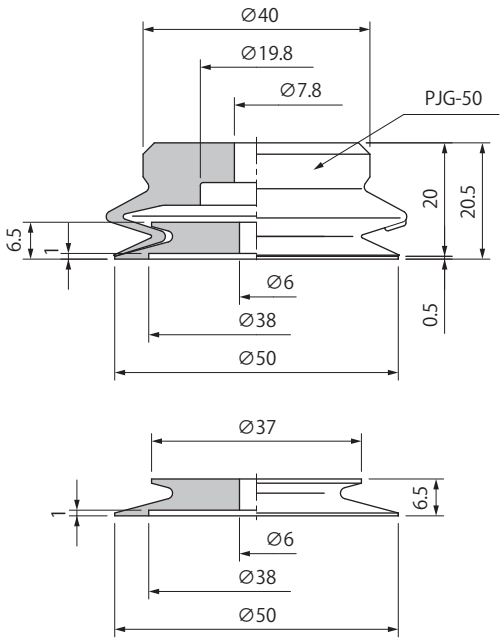

CORE-60

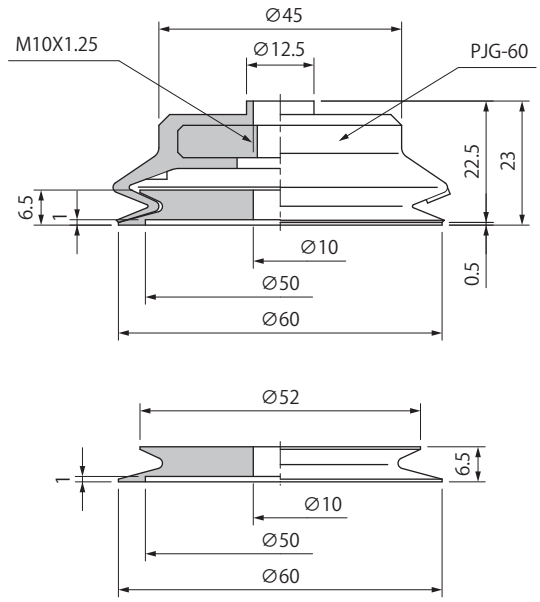

CORE-70

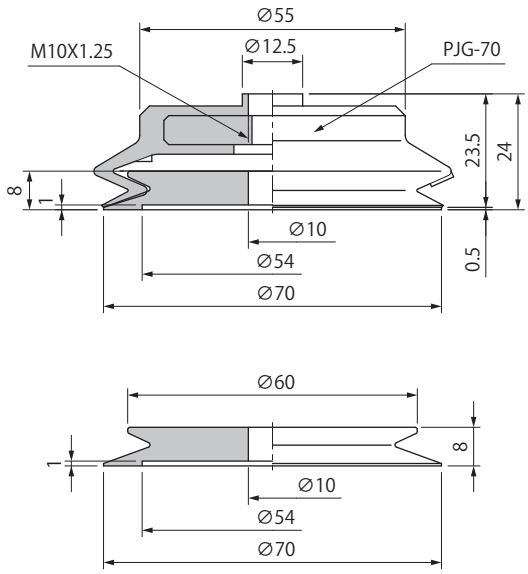

CORE-80

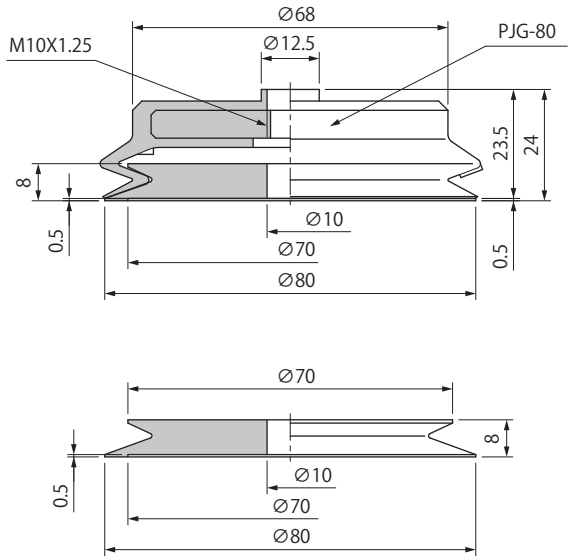

Weight

(g)

Model ＼ Material	S3	PO	PE
CORE-50	46.9	8.3	7.8
CORE-60	81.6	14.5	13.6
CORE-70	151.1	26.9	25.2
CORE-80	213.2	37.9	35.5

Symbol	Material
S3	SUS303
PO	POM
PE	PEEK

PK2 Series

High Durability Cup/Flat Type

RoHS

Made with TPU (Thermoplastic polyurethane) material having high durability.

Wear resistant 10 times longer than conventional material
(※10 times less than NBR on the list of ※1 Taper abrasion loss)

Oil resistance Excellent resistance against oil

Weather resistance Excellent resistance against ozone, long life circle

TPU physical characteristics comparison

Type	NBR	TPU
Hardness(A/s)	55	85
Tensile strength TB(MPa)	13.5	46
Tear strength TR(N/mm)	34.8	95
Growth EB(%)	630	570
※1 Taber abrasion loss(mg) (Reference value)	241	24
※2 Wear resistant	△～○	◎
※2 Aging resistance	○	○
※2 Ozone resistance	×	◎
※2 Oil resistance	○	◎

※1. JIS K7311…wear ring :H-22, load 9.8N, rotational speed: 1000 rotation.
※2. It's a specifications excerpt of each company, not comparison of NBR and TPU.

Wide range of cup sizes.

ϕ10 | ϕ15 | ϕ20 | ϕ25 | ϕ30 | ϕ40 | ϕ50 | ϕ60 | ϕ80 | ϕ100 | ϕ120 | ϕ150

Suction Cup

PK2		Cup size (mm) ϕ10～150	P.369

Flexible lip to follow curved surface, for various object shape

Application **Automotive industry**

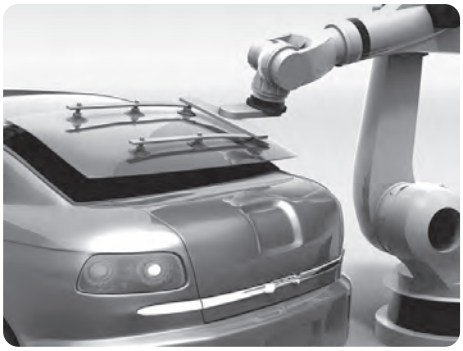

Due to high durability,
less replacement and running cost.

Patterned cup surface prevents sideslip on workpieces with an oily surface.

- Sheet metal and other work pieces with the oily surface can be picked up and transported!

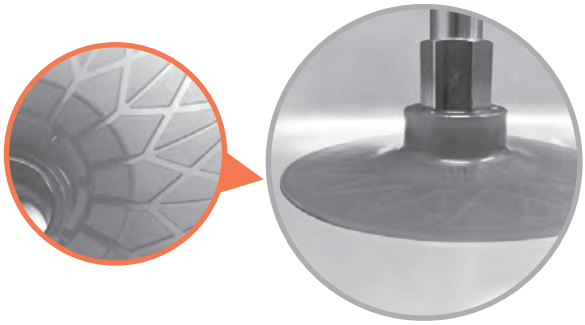

Application **Press industry**

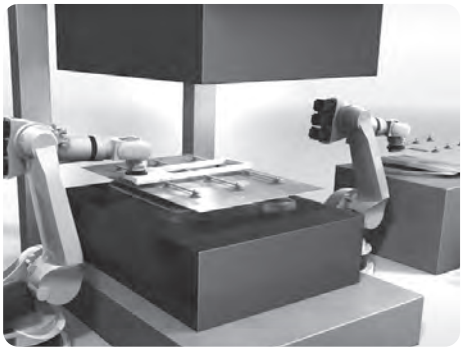

40% lighter compared to PKMG series (NBR).

- Compatible with PKMG series.
- No need to separate rubbish as the cup is without metal shaft .
  →Eco-friendly !

PK2 High Durability Cup/Flat Type

How to Order

PK2 — 15 — T

①

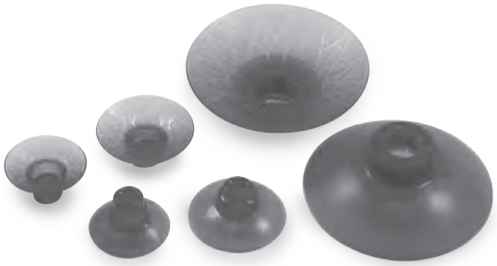

① Cup Size (mm)

Symbol	Cup size	Symbol	Cup size
10	ϕ10	50	ϕ50
15	ϕ15	60	ϕ60
20	ϕ20	80	ϕ80
25	ϕ25	100	ϕ100
30	ϕ30	120	ϕ120
40	ϕ40	150	ϕ150

Cup Rubber Material
TPU

Cup Rubber Material Standard Specifications

Symbol	Material	Hardness (A/s)	Ambient temperature (℃)	Color
T	TPU	85	-10～70	Semitransparent pink

※The insert material of ϕ60 or more are PA (Polyamide).

Cup Standard Specifications

Model number	Weight (g)	The minimum radius of curvature of workpiece R (mm)	Maximum expansion amount of cup diameter (mm)
PK2-10-T	0.2	8	10.9
PK2-15-T	0.3	12.5	16.6
PK2-20-T	0.5	15	21.7
PK2-25-T	1.2	20	26.8
PK2-30-T	3.2	16	37
PK2-40-T	5.1	20	47.8
PK2-50-T	6.8	25	58.5
PK2-60-T	18	31	70.9
PK2-80-T	25	35	91
PK2-100-T	37.2	45	112.5
PK2-120-T	57.7	55	136.1
PK2-150-T	100	75	169.8

Applicable Setting Screw Table・Setting Screw Specifications

Setting screws	Specifications	Tightening Torque (N・m)	Material	Applicable cup size (ϕmm)											
				10	15	20	25	30	40	50	60	80	100	120	150
TN-PF-10-M5	M5X0.8 Male	-	Brass	○											
TN-PF-15-M5		-			○	○									
TN-PF-25-M6	M6X1.0 Male	-					○								
TN-PK2-30-M6		5	Stainless					○		○					
TN-PK2-40-M6									○						
TN-PK2-30-M10	M10X1.5 Male	12.5						○		○					
TN-PK2-40-M10									○						
TN-PK-100-M10			Carbon steel								○	○	○	○	○
TN-PK-100-M10F	M10X1.25 Female	-									○	○	○	○	○
TN-PK-100-M12	M12X1.75 Male	21									○	○	○	○	○
TN-PK-6710	M16X1.5 Male	38.5									○	○	○	○	○

※Can be mounted to our standard fitting. Refer to below table.
※Refer to P.503 for setting screw detailed specifications.

Cup・Setting Screw Combination Image

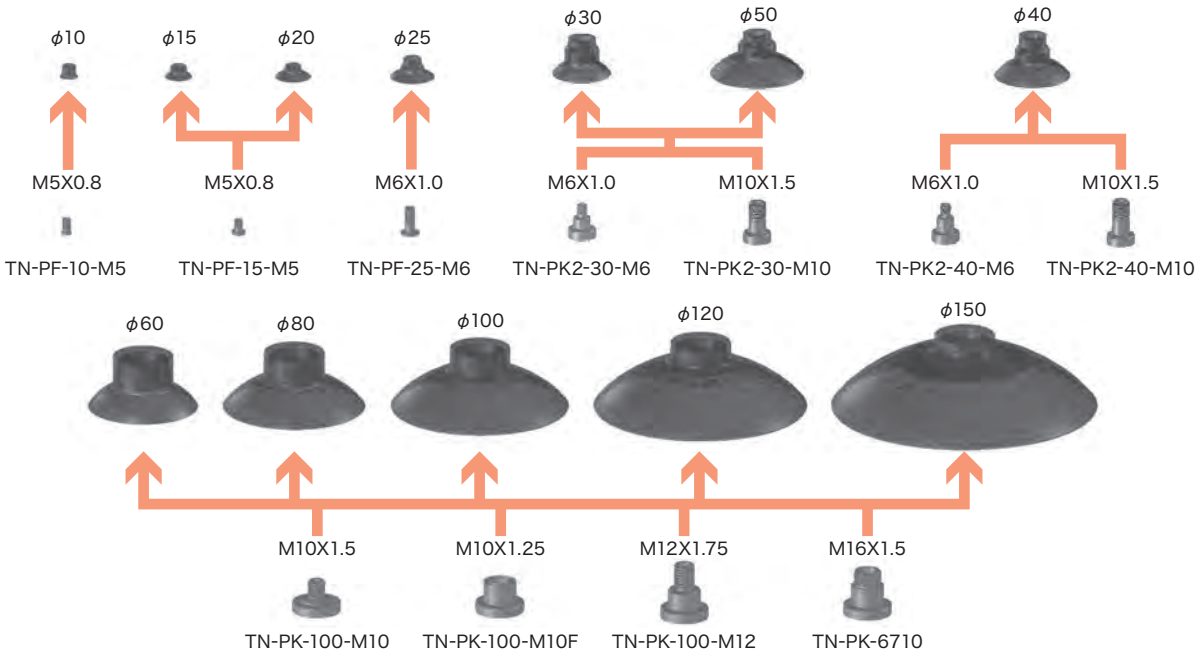

Applicable Fitting Set List (Please screw the suction cup directly to the fitting.)

PK2 model	Setting screw	Applicable fitting set			Recommended torque (N・m)
		Fixed fitting	Spring fitting	Spring fitting with non-rotation	
PK2-10-T	TN-PF-10-M5	PF○K-15-K	NAPC○S-10-3-K (-T/O) NAPC○S-10-10-K (-T/O) NAPC○S-10-15-K (-T/O)	NAPC○H-10-3-K (-T/O) NAPC○H-10-10-K (-T/O) NAPC○H-10-15-K (-T/O)	-
PK2-15-T	TN-PF-15-M5				
PK2-20-T					
PK2-25-T	TN-PF-25-M6	PF○K-25-K	NAPF○S-20B-6-K (-T/O) NAPF○S-20B-15-K (-T/O) NAPF○S-20B-30-K (-T/O)	NAPF○H-20B-6-K (-T/O) NAPF○H-20B-15-K (-T/O) NAPF○H-20B-30-K (-T/O)	5
PK2-30-T	TN-PK2-30-M6				
PK2-40-T	TN-PK2-40-M6				
PK2-50-T	TN-PK2-30-M6				
PK2-60-T	TN-PK-100-M10F	PF○K-60-K	NAPF○S-60-10-K NAPF○S-60-30-K NAPF○S-60-50-K	Without	12.5
PK2-80-T					
PK2-100-T					
PK2-120-T					
PK2-150-T					

Standard fitting with cup

※○in the table indicates the vacuum port (T or Y).
※The recommended torque is only for metal-to-metal tightening.

PK2 High Durability Cup/Flat Type

Dimensions

(mm)

PK2-10-T

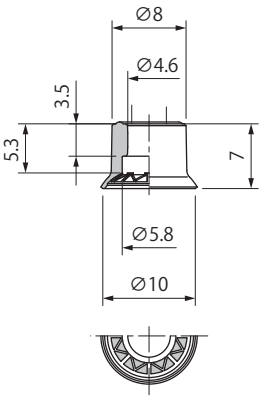

PK2-15-T

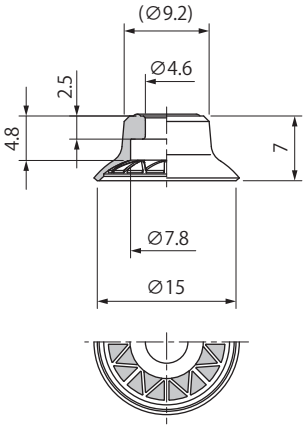

PK2-20-T

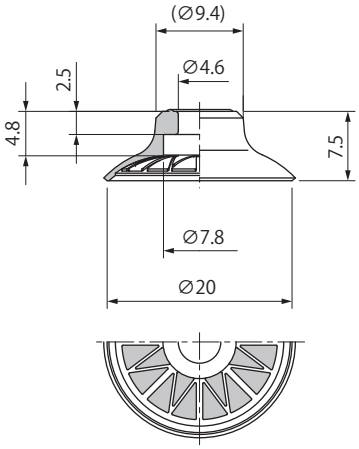

PK2-25-T

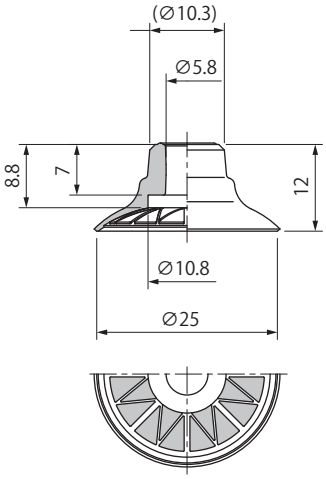

PK2-30-T

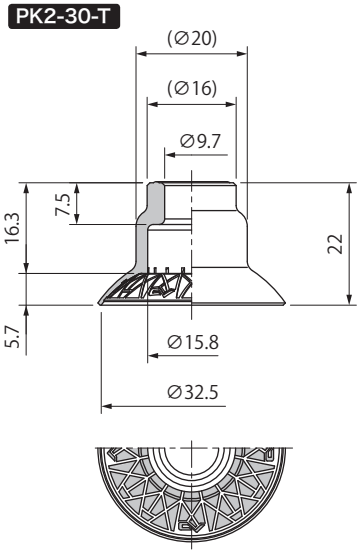

PK2-40-T

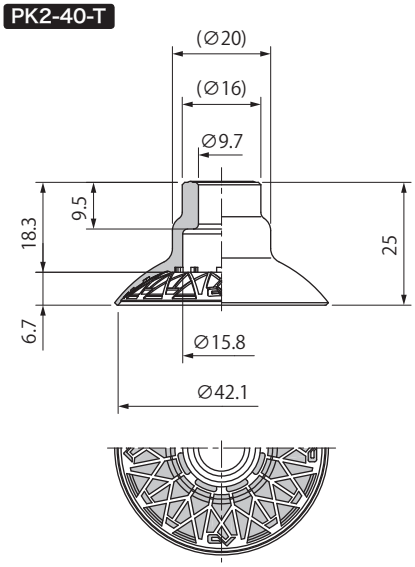

PK2-50-T

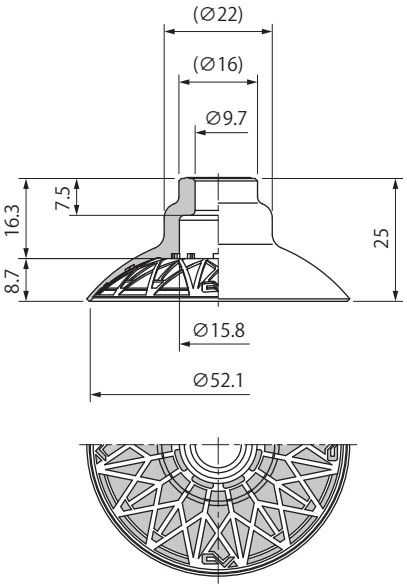

PK2-60-T

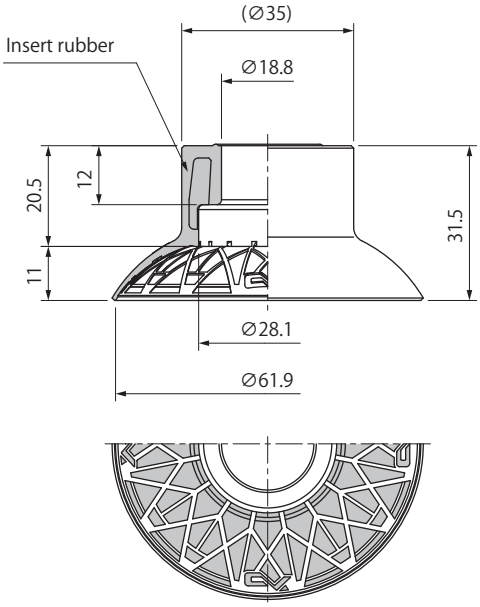

Dimensions

(mm)

PK2-80-T

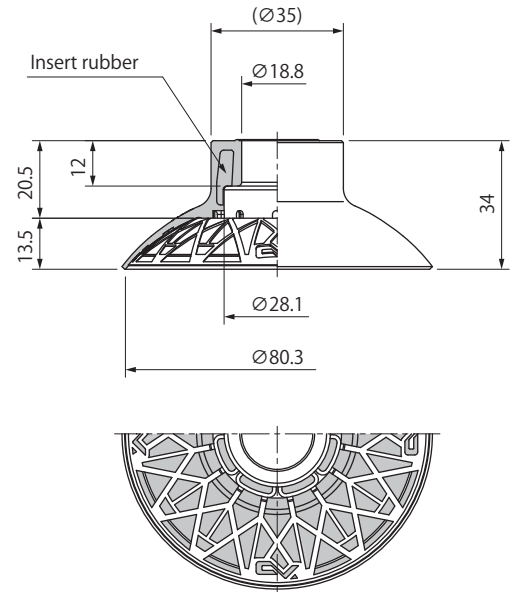

PK2-100-T

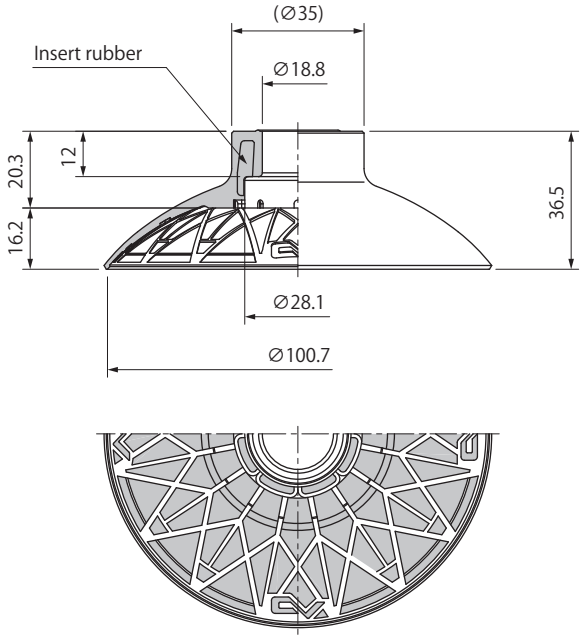

PK2-120-T

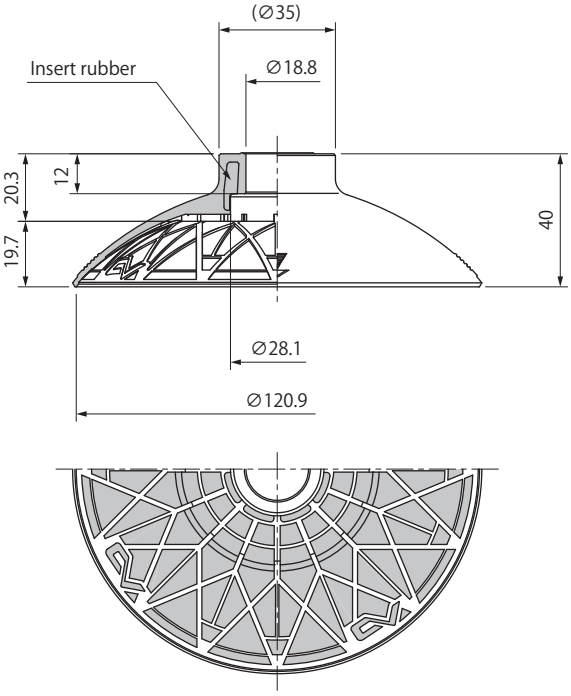

PK2-150-T

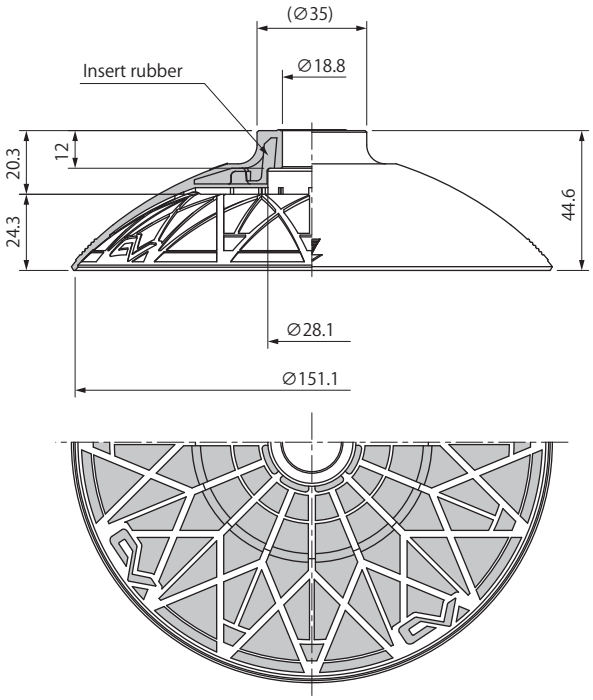

PK2B Series

High Durability Cup/2 Bellows Type

RoHS

More flexible lip to follow curved surface than flat type!

○ Suitable for handling a wide range of workpiece shapes.

Flat type

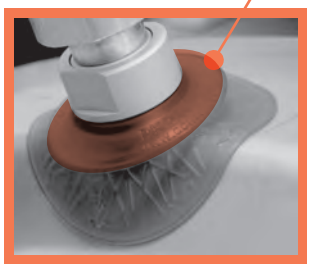

Bellows type

Made with TPU (Thermoplastic polyurethane) material having high durability.

Wear resistant 10 times longer than conventional material
(※10 times less than NBR on the list of ※1 Taper abrasion loss)

Oil resistance Excellent resistance against oil

Weather resistance Excellent resistance against ozone, long life circle

TPU physical characteristics comparison

Type	NBR	TPU
Hardness(A/s)	55	85
Tensile strength TB(MPa)	13.5	46
Tear strength TR(N/mm)	34.8	95
Growth EB(%)	630	570
※1 Taber abrasion loss(mg) (Reference value)	241	24
※2 Wear resistant	△～○	◎
※2 Aging resistance	○	○
※2 Ozone resistance	×	◎
※2 Oil resistance	○	◎

※1. JIS K7311…wear ring :H-22, load 9.8N, rotational speed: 1000 rotation.
※2. It's a specifications excerpt of each company, not comparison of NBR and TPU.

Fitting

Type	Applicable cup size (mm)	Stroke (mm)	Vacuum port	Piping・Connector	Page
Cup with fixed fitting	ϕ10, 20, 30, 40, 60, 80, 100, 120, 150	N/A	Top	Male screw	P.375
Cup with fixed fitting	ϕ 60, 80, 100, 120, 150	N/A	Top	Female screw	P.375

Patterned cup surface prevents sideslip on workpieces with an oily surface.

- Sheet metal and other workpieces with the oily surface can be picked up and transported!

Wide range of cup sizes.

ϕ10 | ϕ20 | ϕ30 | ϕ40 | ϕ60 | ϕ80 | ϕ100 | ϕ120 | ϕ150

Mesh filter to avoid getting foreign objects can be selected.

※ϕ40 or more

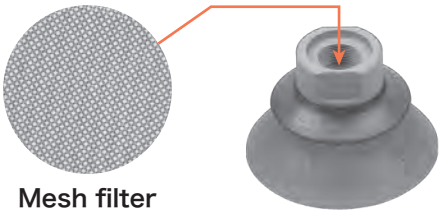

With teaching mark!

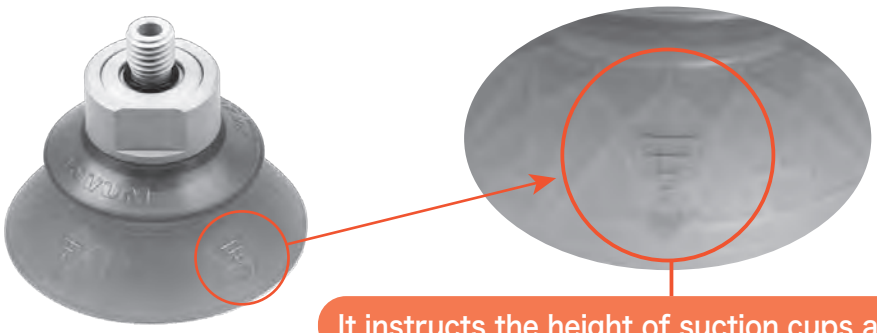

It instructs the height of suction cups as a guide

PK2B High Durability Cup/2 Bellows Type

How to Order

PK2B – 60 – T – M10 – F

① ② ③

③ Filter

Blank	N/A
F	With

※ ϕ10, 20, 30 is without filter only

① Cup Size (mm)

Symbol	Cup size
10	ϕ10
20	ϕ20
30	ϕ30
40	ϕ40
60	ϕ60
80	ϕ80
100	ϕ100
120	ϕ120
150	ϕ150

Cup Rubber Material
TPU

② Screws Specifications

Symbol	Size	Applicable cup size
M5	M5X0.8 Male	ϕ 10
M6	M6X1.0 Male	ϕ 20,30,40
M10	M10X1.5 Male	ϕ 40,60,80,100,120,150
M12	M12X1.75 Male	ϕ 40,60,80,100,120,150
M16	M16X1.5 Male	ϕ 40,60,80,100,120,150
G1	G1/8 Male	ϕ 20,30
G2	G1/4 Male	ϕ 40,60,80
M10F	M10X1.25 Female	ϕ 60,80,100,120,150

※PK2B is assembly of screw and suction cup.
※The screw and suction cup is fixed by glue and cannot be taken off.
※We don't sell the filter only.

Cup Rubber Material Standard Specifications

Symbol	Material	Hardness (A/s)	Ambient temperature (℃)	Color
T	TPU	85	-10～70	Semitransparent pink

※Insert material is aluminum.

Fitting Specifications

Cup size	ϕ 10	ϕ 20,30		ϕ 40, 60, 80, 100, 120, 150					
Screw specifications	M5X0.8 Male	M6X1.0 Male	G1/8 Male	M6X1.0 Male Note1	M10X1.5 Male	M12X1.75 Male	M16X1.5 Male	G1/4 Male Note2	M10X1.25 Female Note3
Tightening Torque (N・m)	1.5	2.6	9.1	5	12.5	21	38.5	24.2	12.5
Material	Aluminum			Carbon steel					Aluminum
Filter	N/A			SUS (MESH60) Note4					
Packing	NBR								N/A

Note1) ϕ40 only.
Note2) ϕ40, 60, 80 only.
Note3) ϕ60, 80, 100, 120, 150 only.
Note4) When selecting with filter.

Applicable Fitting Set List（Screw the fitting directly to the cup）

PK2B model	Applicable fitting set			Recommended torque (N・m)
	Fixed fitting	Spring fitting	Non-rotation spring fitting	
PK2B-10-T-M5	PF○K-15-K	NAPC○S-10-3-K（-T/O)	NAPC○H-10-3-K（-T/O)	1.5
		NAPC○S-10-10-K（-T/O)	NAPC○H-10-10-K（-T/O)	
		NAPC○S-10-15-K（-T/O)	NAPC○H-10-15-K（-T/O)	
PK2B-20-T-M6	PF○K-25-K	NAPF○S-20B-6-K（-T/O) NAPF○S-20B-15-K（-T/O) NAPF○S-20B-30-K（-T/O)	NAPF○H-20B-6-K（-T/O) NAPF○H-20B-15-K（-T/O) NAPF○H-20B-30-K（-T/O)	2.6
PK2B-30-T-M6				
PK2B-40-T-M6				5
PK2B-60-T-M10F	PF○K-60-K	NAPF○S-60-10-K NAPF○S-60-30-K NAPF○S-60-50-K	N/A	12.5
PK2B-80-T-M10F				
PK2B-100-T-M10F				
PK2B-120-T-M10F				
PK2B-150-T-M10F				

※○in the table indicates the vacuum port (T or Y).
※The recommended torque is only for metal-to-metal tightening.

Standard fitting with cup

Dimensions

(mm)

PK2B-10

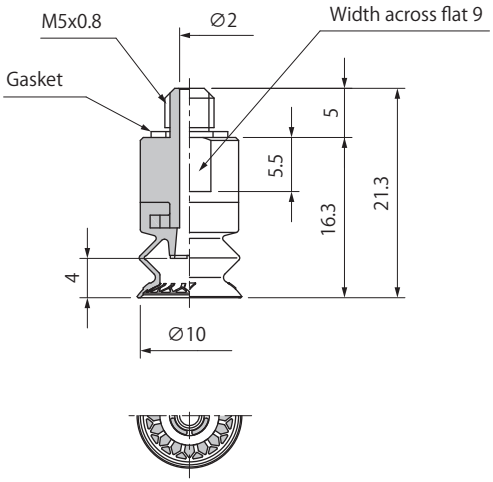

Model number	Weight (g)
PK2B-10-T-M5	2.1

PK2B-20

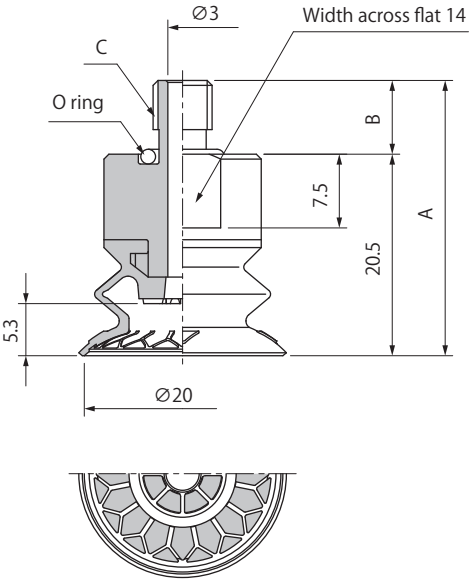

Model number	A	B	C	Weight (g)
PK2B-20-T-M6	28	7.5	M6×1.0	6.4
PK2B-20-T-G1	28.5	8	G1/8	7.2

PK2B-30

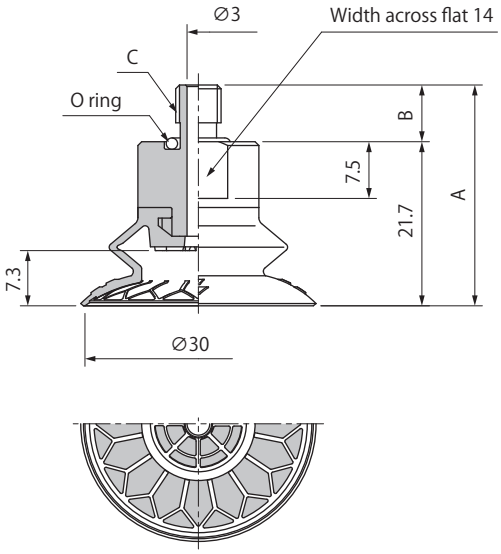

Model number	A	B	C	Weight (g)
PK2B-30-T-M6	29.2	7.5	M6×1.0	7.3
PK2B-30-T-G1	29.7	8	G1/8	8.2

PK2B-40

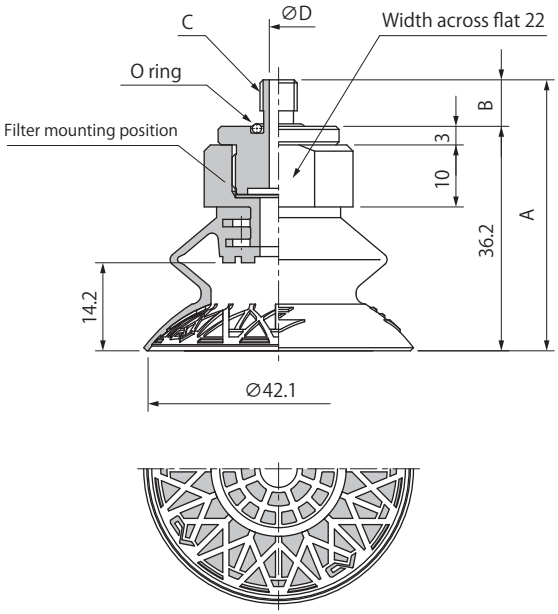

Model number	A	B	C	D	Weight (g)
PK2B-40-T-M6(-F)	43.7	7.5	M6×1.0	3	32.1
PK2B-40-T-M10(-F)	47.7	11.5	M10×1.5	5	34.2
PK2B-40-T-M12(-F)	51.2	15	M12×1.75	6	35.3
PK2B-40-T-M16(-F)	46.2	10	M16×1.5	10	33
PK2B-40-T-G2(-F)	45.2	9	G1/4	6	34.2

※Weight indicates the value of PK2B without filter(F).
※The weight of filter is 0.1g.

Dimensions

(mm)

PK2B-60 Male screw

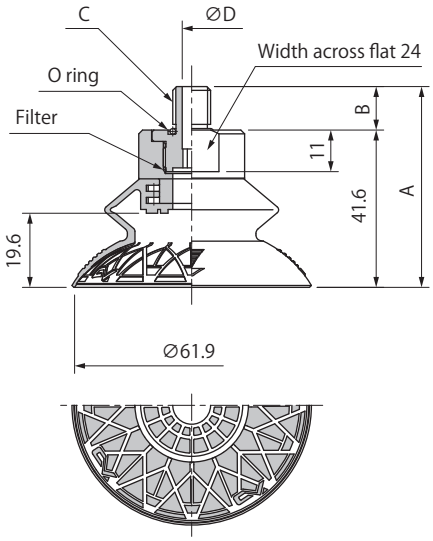

Model number	A	B	C	D	Weight (g)
PK2B-60-T-M10(-F)	53.1	11.5	M10×1.5	5	48.9
PK2B-60-T-M12(-F)	56.6	15	M12×1.75	6	50.0
PK2B-60-T-M16(-F)	51.6	10	M16×1.5	10	47.6
PK2B-60-T-G2(-F)	50.6	9	G1/4	6	48.9

※Weight indicates the value of PK2B without filter(F).
※The weight of filter is 0.1g.

PK2B-60 Female screw

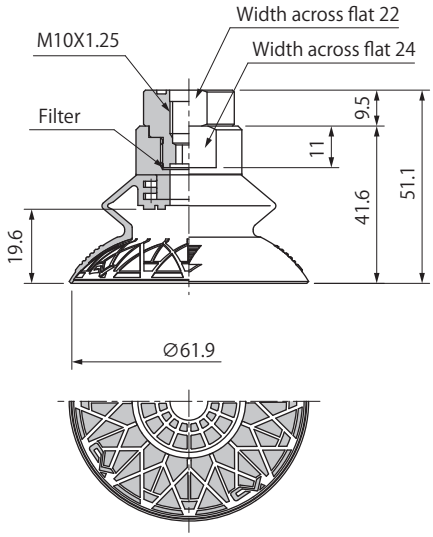

Model number	Weight (g)
PK2B-60-T-M10F(-F)	44.5

※Weight indicates the value of PK2B without filter(F).
※The weight of filter is 0.1g.

PK2B-80 Male screw

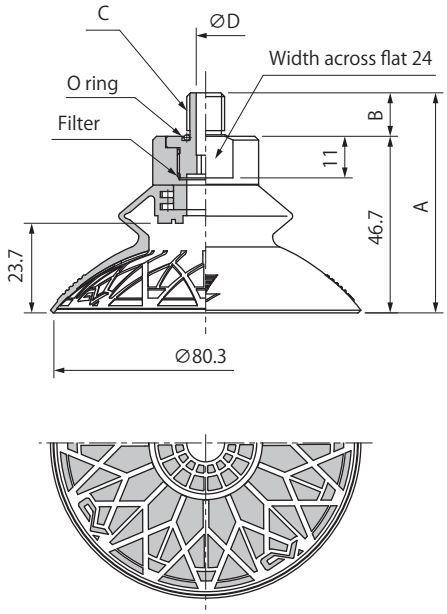

Model number	A	B	C	D	Weight (g)
PK2B-80-T-M10(-F)	58.2	11.5	M10×1.5	5	56.5
PK2B-80-T-M12(-F)	61.7	15	M12×1.75	6	57.6
PK2B-80-T-M16(-F)	56.7	10	M16×1.5	10	55.2
PK2B-80-T-G2(-F)	55.7	9	G1/4	6	56.4

※Weight indicates the value of PK2B without filter(F).
※The weight of filter is 0.1g.

PK2B-80 Female screw

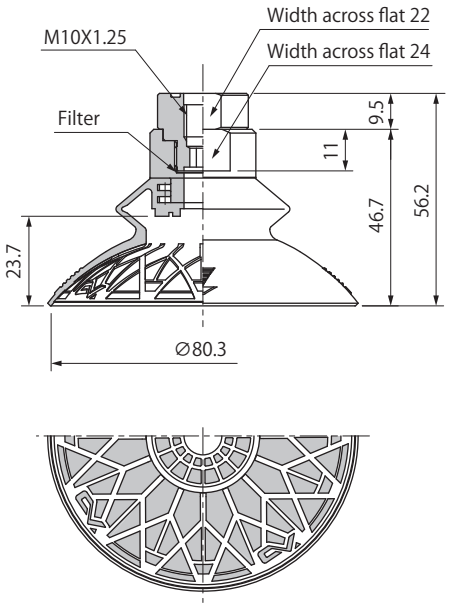

Model number	Weight (g)
PK2B-80-T-M10F(-F)	52

※Weight indicates the value of PK2B without filter(F).
※The weight of filter is 0.1g.

Dimensions

(mm)

PK2B-100 Male screw

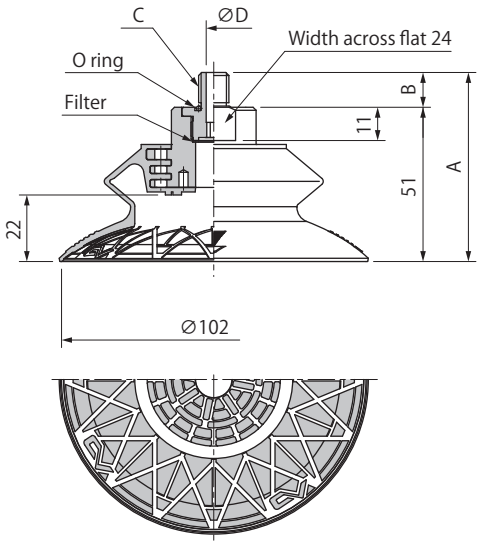

Model number	A	B	C	D	Weight (g)
PK2B-100-T-M10(-F)	62.5	11.5	M10×1.5	5	120.7
PK2B-100-T-M12(-F)	66	15	M12×1.75	6	121.9
PK2B-100-T-M16(-F)	61	10	M16×1.5	10	119.5

※Weight indicates the value of PK2B without filter(F).
※The weight of filter is 0.1g.

PK2B-100 Female screw

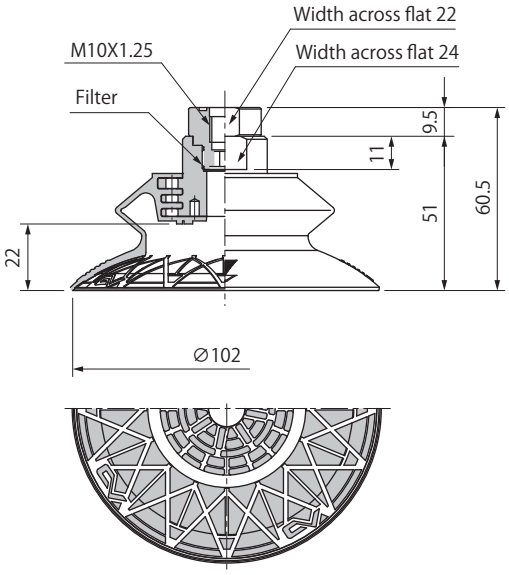

Model number	Weight (g)
PK2B-100-T-M10F(-F)	116.2

※Weight indicates the value of PK2B without filter(F).
※The weight of filter is 0.1g.

PK2B-120 Male screw

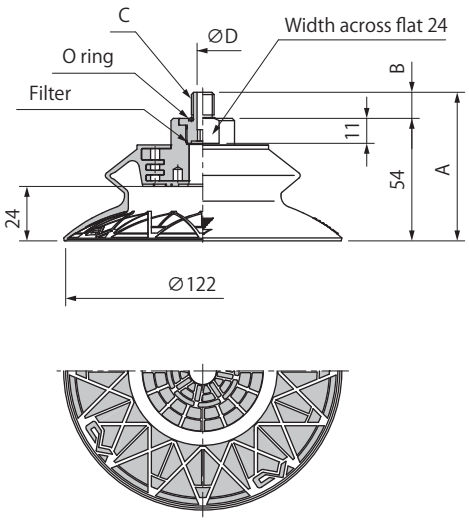

Model number	A	B	C	D	Weight (g)
PK2B-120-T-M10(-F)	65.5	11.5	M10×1.5	5	168.7
PK2B-120-T-M12(-F)	69	15	M12×1.75	6	169.9
PK2B-120-T-M16(-F)	64	10	M16×1.5	10	167.5

※Weight indicates the value of PK2B without filter(F).
※The weight of filter is 0.1g.

PK2B-120 Female screw

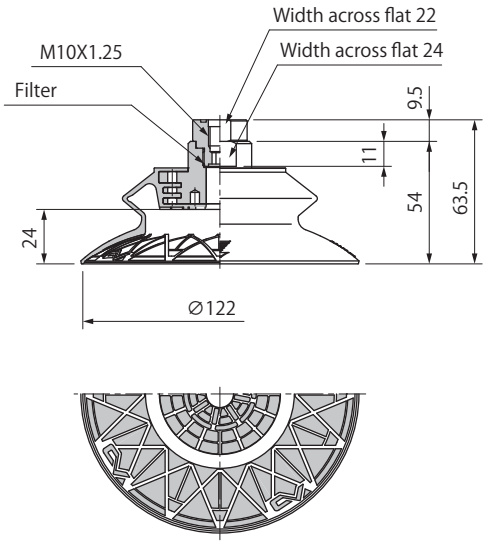

Model number	Weight (g)
PK2B-120-T-M10F(-F)	164.2

※Weight indicates the value of PK2B without filter(F).
※The weight of filter is 0.1g.

Dimensions

(mm)

PK2B-150 Male screw

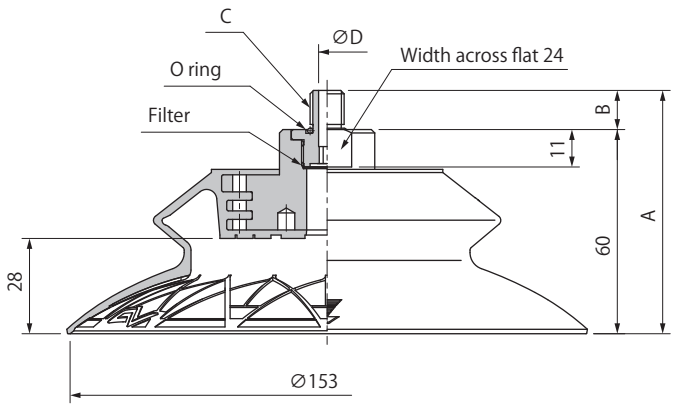

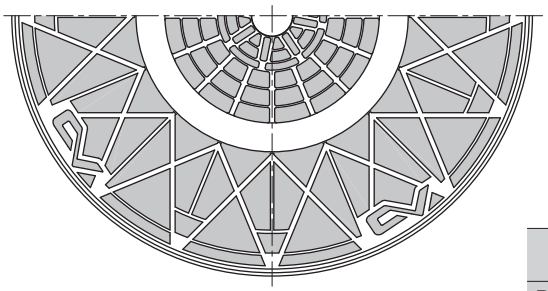

Model number	A	B	C	D	Weight (g)
PK2B-150-T-M10(-F)	71.5	11.5	M10×1.5	5	244.7
PK2B-150-T-M12(-F)	75	15	M12×1.75	6	245.9
PK2B-150-T-M16(-F)	70	10	M16×1.5	10	243.5

※Weight indicates the value of PK2B without filter(F).
※The weight of filter is 0.1g.

PK2B-150 Female screw

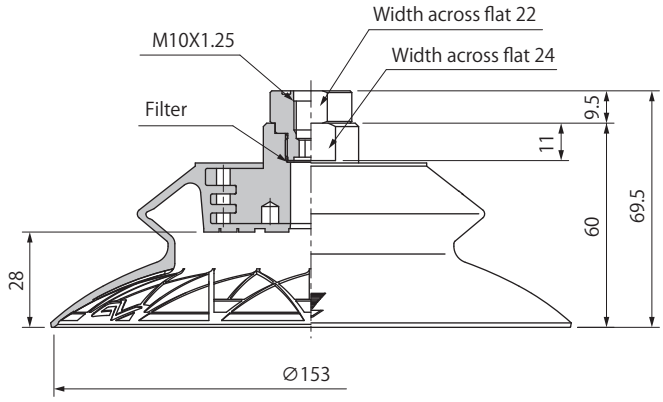

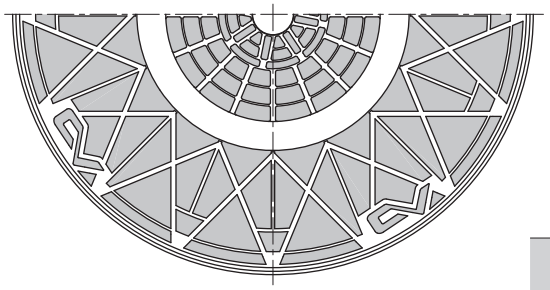

Model number	Weight (g)
PK2B-150-T-M10F(-F)	238.9

※Weight indicates the value of PK2B without filter(F).
※The weight of filter is 0.1g.

PK2L Series

High Durability Cup/Oval Type

RoHS

Oval type new appearance!

Lineup

60×20 | 80×30 | 100×40

Made with TPU (Thermoplastic polyurethane) material having high durability.

Wear resistant 10 times longer than conventional material
(※10 times less than NBR on the list of ※1 Taper abrasion loss)

Oil resistance Excellent resistance against oil

Weather resistance Excellent resistance against ozone, long life circle

TPU physical characteristics comparison

Type	NBR	TPU
Hardness(A/s)	55	85
Tensile strength TB(MPa)	13.5	46
Tear strength TR(N/mm)	34.8	95
Growth EB(%)	630	570
※1 Taber abrasion loss(mg) (Reference value)	241	24
※2 Wear resistant	△~○	◎
※2 Aging resistance	○	○
※2 Ozone resistance	×	◎
※2 Oil resistance	○	◎

※1. JIS K7311…wear ring :H-22, load 9.8N, rotational speed: 1000 rotation.
※2. It's a specifications excerpt of each company, not comparison of NBR and TPU.

Patterned cup surface prevents sideslip on workpieces with an oily surface.

Sheet metal and other workpieces with the oily surface can be picked up and transported!

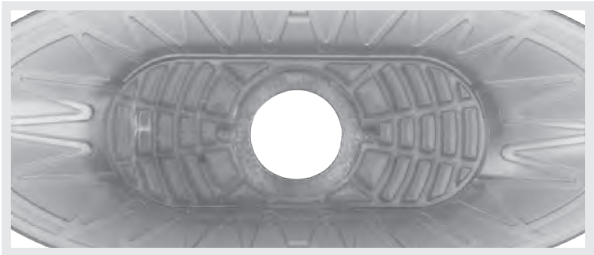

Suction Cup

PK2L	Cup size (mm) 60 X 20, 80 X 30, 100 X 40		P.383

Fitting

Type	Applicable cup size (mm)	Stroke (mm)	Vacuum port	Piping・Connector	Page
Cup with fixed fitting PK2L- □ - M	60 X 20, 80 X 30, 100 X 40	N/A	Top	Male screw	P.383
Cup with fixed fitting PK2L- □ -G2F	60 X 20, 80 X 30, 100 X 40	N/A	Top	Female screw	P.383

Suction Cup Selection Guide ••→ P.163

○ Suitable for handling long and narrow workpiece shapes (flame・pipe, etc.)

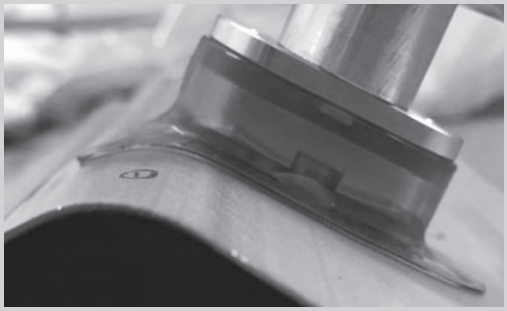

Male Screw Assembly Method

Construction

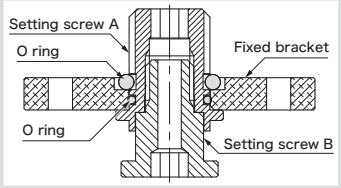

① Remove the setting screw B from male screw set.

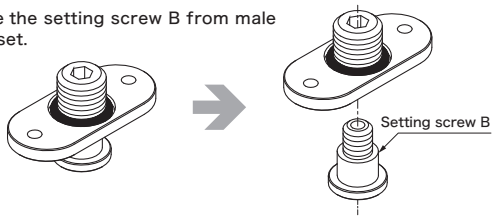

② Adjusting the angle of fixed bracket, screw the setting screw A to cup mounting hole.

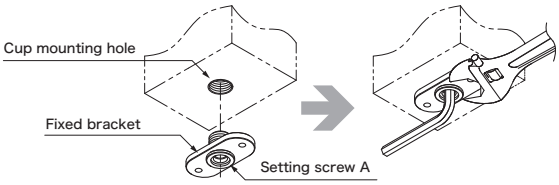

⚠ Recommended torque: 12N・m
Too higher torque may cause deformation of hexagon socket.
Tighten the setting screw A while holding the fixed bracket with a tool to avoid the position aberration.

③ Matching the fixed bracket positioning hole and projection of cup. Fix the cup with setting screw B that removed at①.

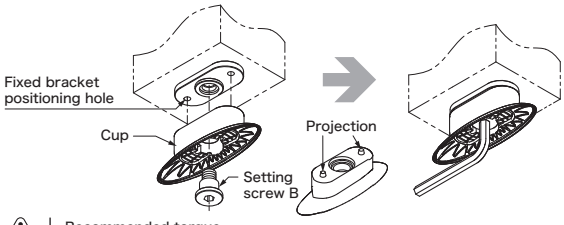

⚠ Recommended torque
60×20/80×30 : 5N・m 100×40 : 10N・m
Deformation or retinue may occur with higher tightening torque above②.

PK2L High Durability Cup/Oval Type

How to Order

• Suction Cup

PK2L — 60X20 — T

① Cup Size (Long diameter×Short diameter) mm

Symbol	Cup size
60X20	60X20
80X30	80X30
100X40	100X40

Cup Rubber Material
TPU

• Cup with Fixed Fitting

PK2L — 60X20 — T — M10

① Cup Size (Long diameter×Short diameter) mm

Symbol	Cup size
60X20	60X20
80X30	80X30
100X40	100X40

Cup Rubber Material
TPU

② Screw Specifications

Symbol	Size
M10	M10X1.5 Male
M12	M12X1.75 Male
M16	M16X1.5 Male
G2F	G1/4 Female

• Fitting

PK2L — 60X20 — K — M10

① Applicable Cup Size (mm)

Symbol	Applicable cup size
60X20	60X20/80X30
100X40	100X40

Fitting

② Screw Specifications

Symbol	Size
M10	M10X1.5 Male
M12	M12X1.75 Male
M16	M16X1.5 Male
G2F	G1/4 Female

• Setting Screw

TN — PK2L — M6

Screw Specifications

Symbol	Size	Applicable cup size
M6	M6X1.0	60X20/80X30
M8	M8X1.25	100X40

※Please refer to P.503 for setting screw detailed specifications.

Cup Rubber Material Standard Specifications

Symbol	Material	Hardness (A/s)	Ambient temperature (℃)	Color
T	TPU	85	-10～70	Semitransparent pink

※The material of insert is PA(Polyamide).

Fitting Specifications

Cup size		60X20 / 80X30 / 100X40			
Screws specifications		M10X1.5 Male	M12X1.75 Male	M16X1.5 Male	G1/4 Female
Material	Mounted screw	Carbon steel			Aluminum
	Fixed plate	Aluminum			
	Setting screw	Stainless			
	Packing	NBR			N/A

Combination Table

Model number	Cup	Setting screw	Fitting	Piping specifications	Recommended torque (N・m)
PK2L-60X20-T-M10	PK2L-60X20-T	TN-PK2L-M6	PK2L-60X20-K-M10	M10 X 1.5 Male	5
PK2L-80X30-T-M10	PK2L-80X30-T				
PK2L-100X40-T-M10	PK2L-100X40-T	TN-PK2L-M8	PK2L-100X40-K-M10		10
PK2L-60X20-T-M12	PK2L-60X20-T	TN-PK2L-M6	PK2L-60X20-K-M12	M12 X 1.75 Male	5
PK2L-80X30-T-M12	PK2L-80X30-T				
PK2L-100X40-T-M12	PK2L-100X40-T	TN-PK2L-M8	PK2L-100X40-K-M12		10
PK2L-60X20-T-M16	PK2L-60X20-T	TN-PK2L-M6	PK2L-60X20-K-M16	M16 X 1.5 Male	5
PK2L-80X30-T-M16	PK2L-80X30-T				
PK2L-100X40-T-M16	PK2L-100X40-T	TN-PK2L-M8	PK2L-100X40-K-M16		10
PK2L-60X20-T-G2F	PK2L-60X20-T	TN-PK2L-M6	PK2L-60X20-K-G2F	G1/4 Female	5
PK2L-80X30-T-G2F	PK2L-80X30-T				
PK2L-100X40-T-G2F	PK2L-100X40-T	TN-PK2L-M8	PK2L-100X40-K-G2F		10

※ The recommended torque is only for metal-to-metal tightening.

PK2L High Durability Cup/Oval Type

Cup・Setting Screw Combination Image

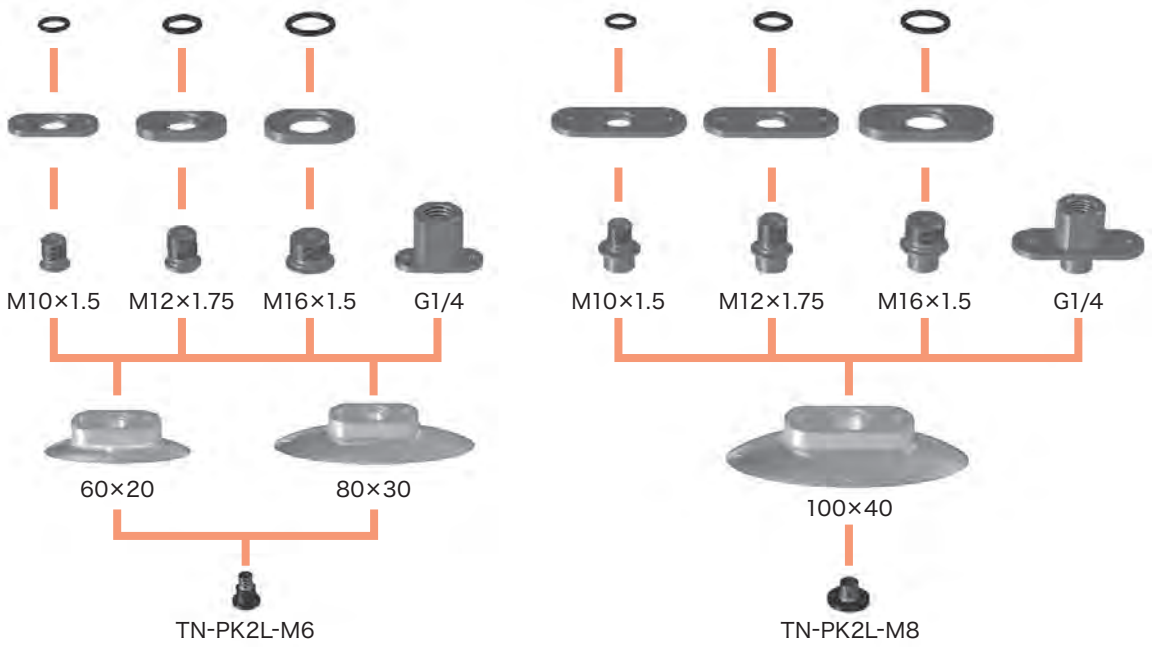

Dimensions

(mm)

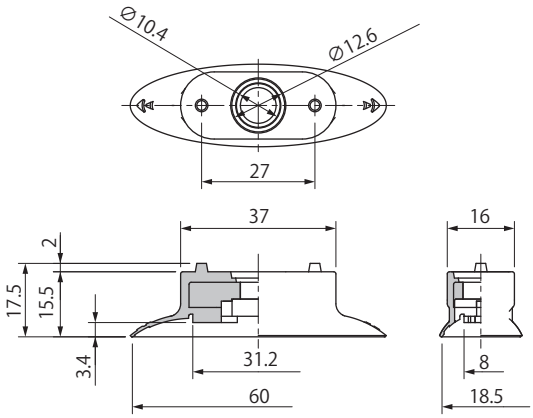

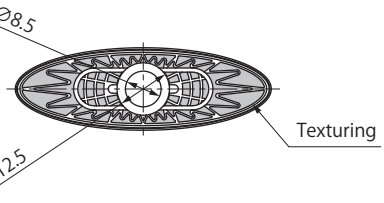

Model number	Weight (g)
PK2L-60X20-T	6.3

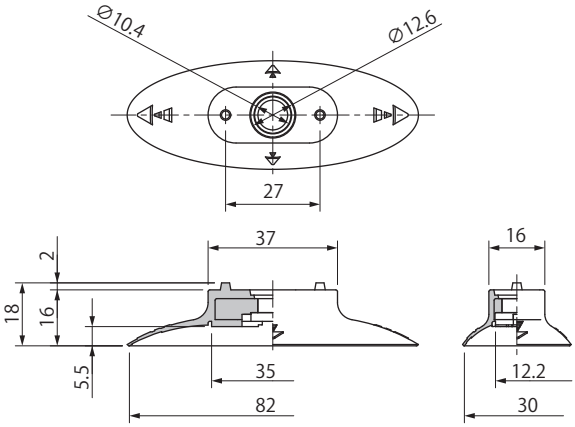

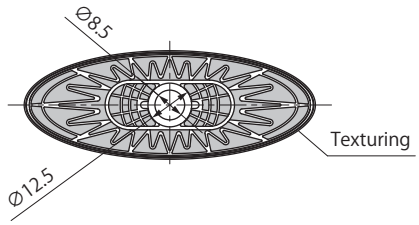

Model number	Weight (g)
PK2L-80X30-T	7.4

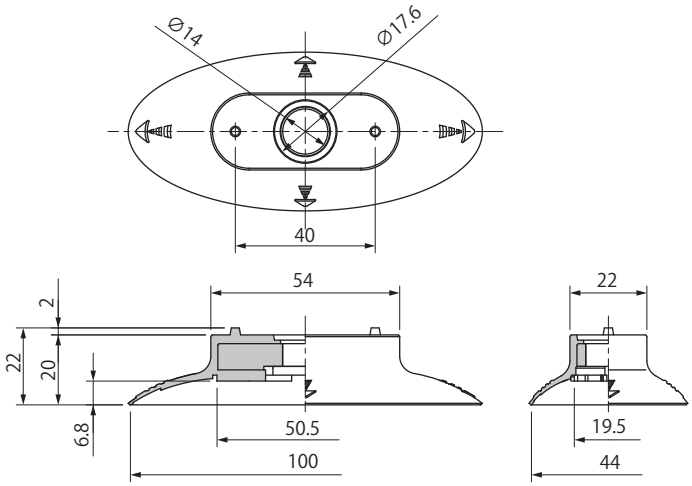

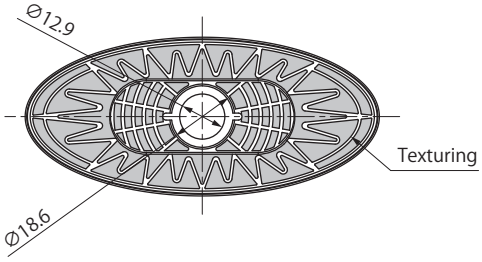

Model number	Weight (g)
PK2L-100X40-T	18.8

Dimensions

(mm)

• Cup with Fixed Fitting

M10 Type

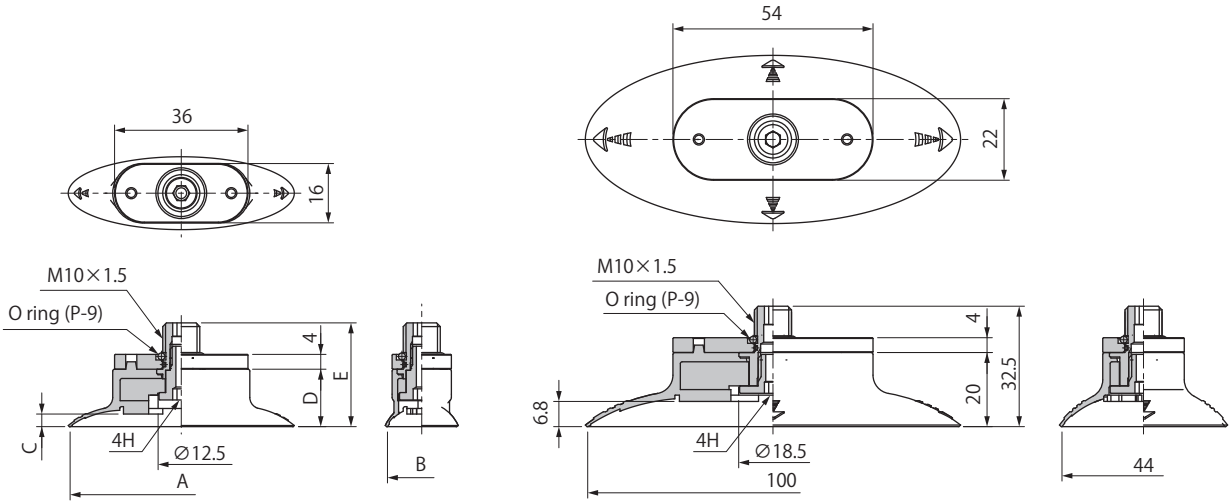

Model number	A	B	C	D	E	Weight (g)
PK2L-60X20-T-M10	60	18.5	3.4	15.5	28	20.2
PK2L-80X30-T-M10	82	30	5.5	16	28.5	21.3
PK2L-100X40-T-M10	-	-	-	-	-	45.9

M12 Type

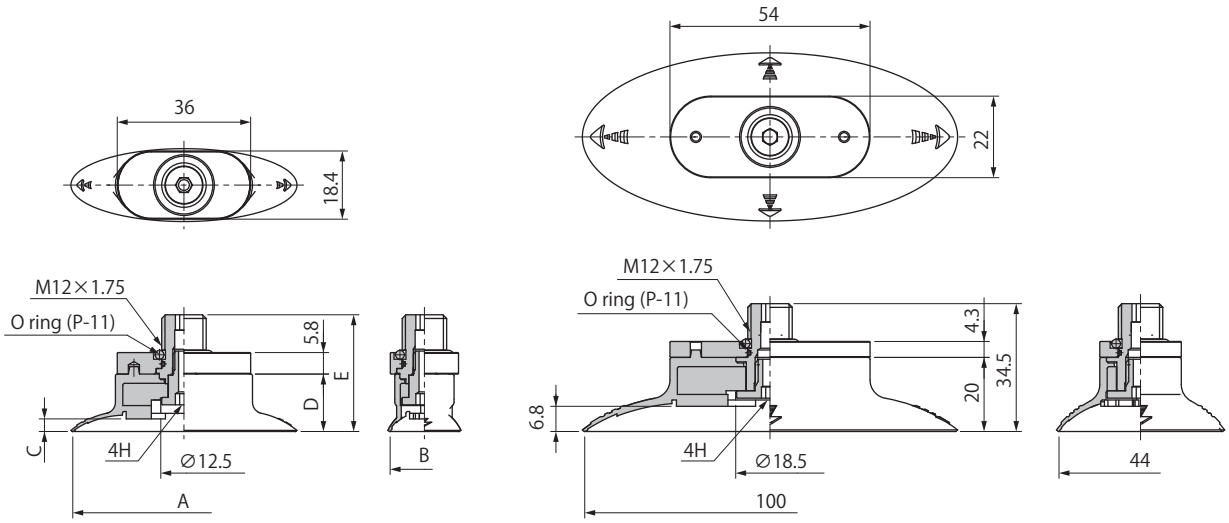

Model number	A	B	C	D	E	Weight (g)
PK2L-60X20-T-M12	60	18.5	3.4	15.5	31.5	28.2
PK2L-80X30-T-M12	82	30	5.5	16	32	29.3
PK2L-100X40-T-M12	-	-	-	-	-	50.1

Dimensions

(mm)

• Cup with Fixed Fitting

M16 Type

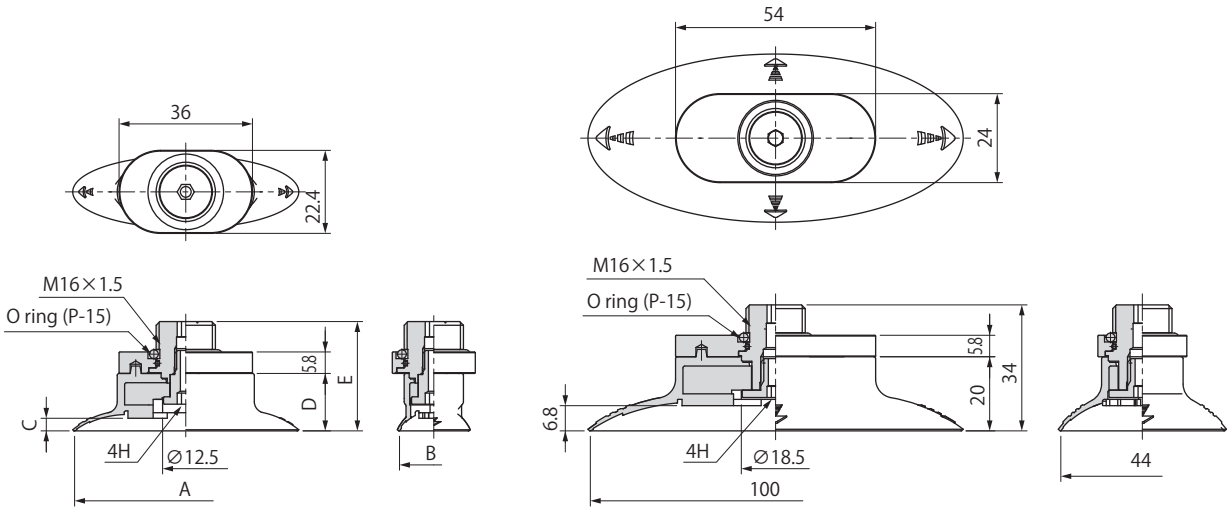

Model number	A	B	C	D	E	Weight (g)
PK2L-60X20-T-M16	60	18.5	3.4	15.5	29.5	36.3
PK2L-80X30-T-M16	82	30	5.5	16	30	37.4
PK2L-100X40-T-M16	-	-	-	-	-	63.4

G2F Type

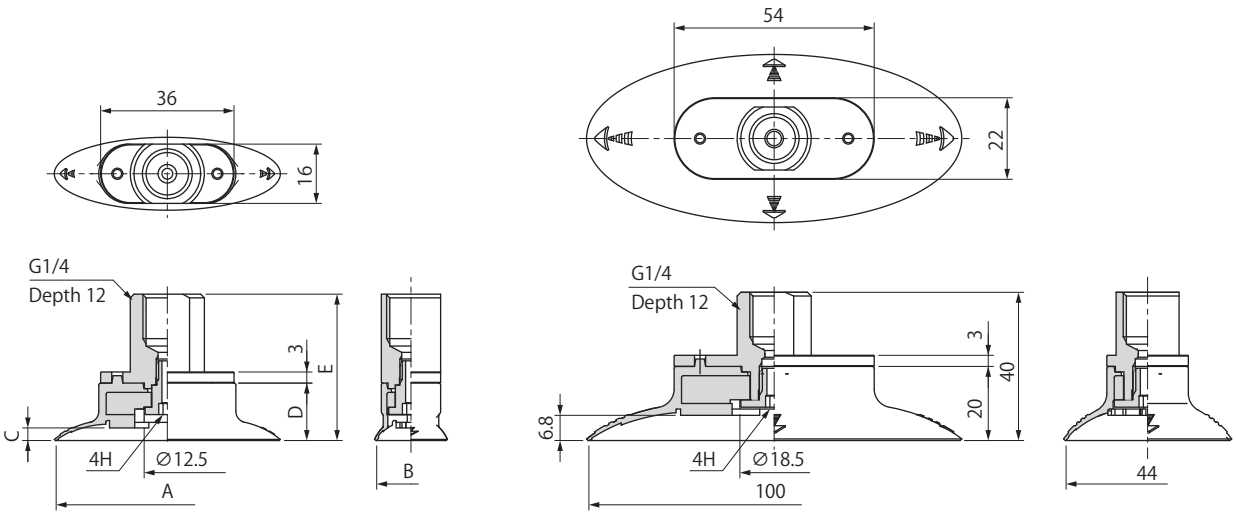

Model number	A	B	C	D	E	Weight (g)
PK2L-60X20-T-G2F	60	18.5	3.4	15.5	39.5	25.3
PK2L-80X30-T-G2F	82	30	5.5	16	40	26.4
PK2L-100X40-T-G2F	-	-	-	-	-	43.3

PL Series

Multiple Bellows Cup

RoHS

Multiple bellows cup with firmer cushion.
More suitable handing uneven or soft workpieces !

- Better cushion characteristics comparing with 2 or 3 bellows cups
- Built-in filter type which prevents the entrance of contaminants can be selected

For uneven workpieces

Mesh filter

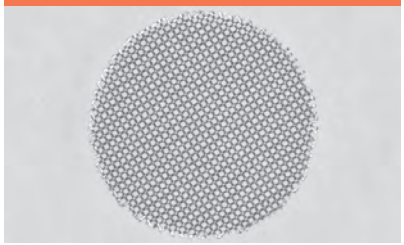

Wide range of cup sizes.

ϕ20 ϕ30 ϕ40 ϕ50

Silicone rubber

Hardness 40(A40/s) (Light blue) ← can select → Hardness 55(A55/s) (Translucent white)

Suction Cup

PLG		Cup size (mm) ϕ20, 30, 40, 50		P.391

Fitting

Type		Applicable cup size (mm)	Stroke (mm)	Vacuum port	Piping・Connector	Page
Cup with fixed fitting PL - □		ϕ20, 30, 40, 50	Without	Top	Male screw	P.393

Bags of spaghetti

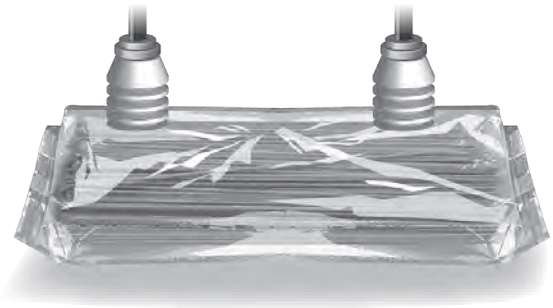

Liquid filled bag

Bags of foods

Vacuum-packed side dish(uneven)

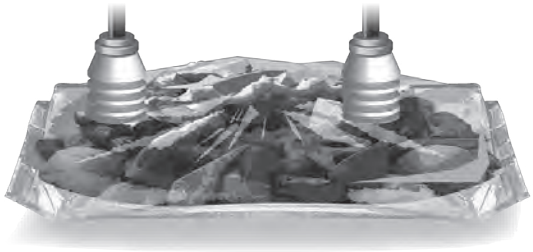

Bags of instant noodles

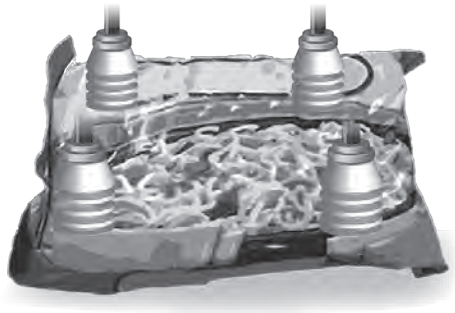

Retort pouch

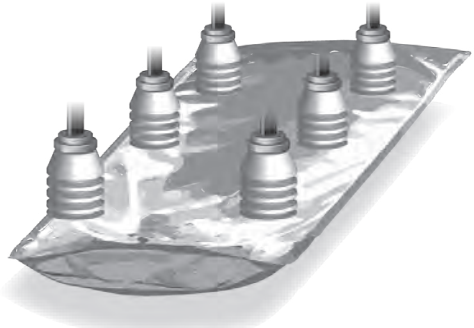

PLG Multiple Bellows Cup

How to Order

PLG – 20 – S4
① ②

① Cup Size (mm)

Symbol	Cup size
20	ϕ20
30	ϕ30
40	ϕ40
50	ϕ50

② Cup Rubber Material

Symbol	Material
S4	Silicone rubber Hardness 40
S5	Silicone rubber Hardness 55

※ Please consult with us for other material.

Cup Rubber Material Standard Specifications

Symbol	Material	Hardness (A/s)	Ambient temperature (℃)	Color
S4	Silicone rubber	40	-60～250	Light blue
S5	Silicone rubber	55		Translucent white

Applicable Rubber Material Table

Material	Color	Symbol	Round type			
			20	30	40	50
Silicone rubber Hardness 40	Light blue	S4	●	●	●	●
Silicone rubber Hardness 55	Translucent white	S5	●	●	●	●

●: In stock ○Made to order ×: None
※Please consult with us for other material.

Dimensions

(mm)

PLG-20

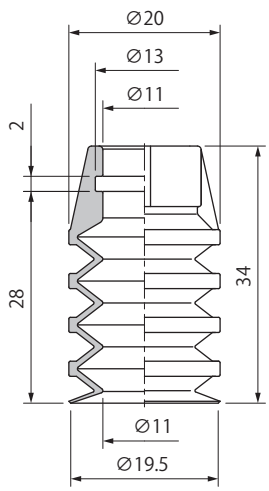

PLG-30

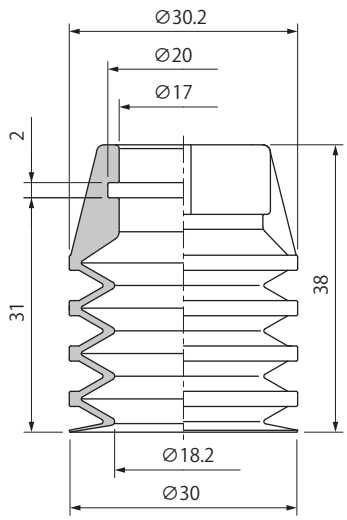

PLG-40

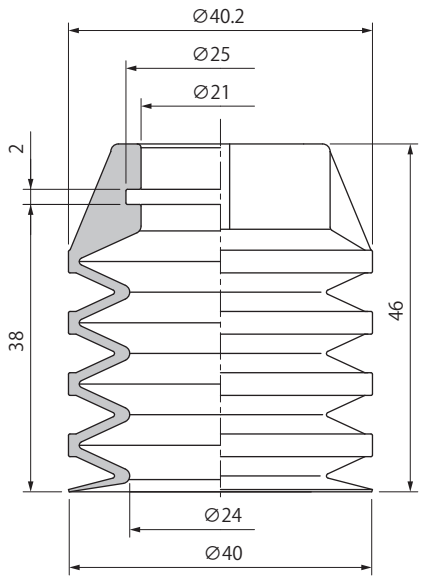

PLG-50

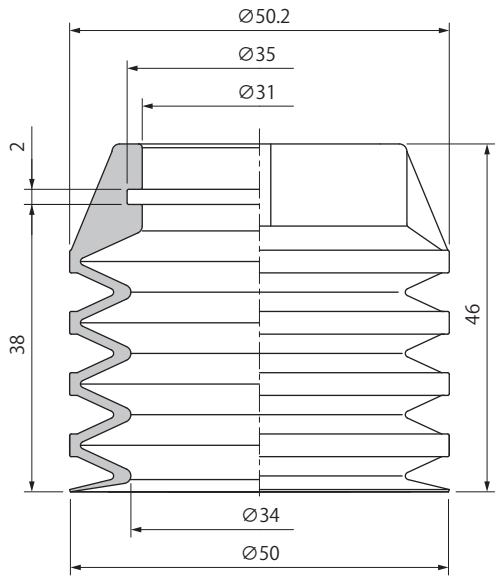

Weight

(g)

Model ＼ Material	S4	S5
PLG-20	2.7	2.9
PLG-30	6.4	6.9
PLG-40	14.8	15.7
PLG-50	19.7	20.8

PL Cup with Fixed Fitting

How to Order

PL – 20 – G1 – S4 – F

① ② ③ ④

① Cup Size (mm)

Symbol	Cup size
20	ϕ20
30	ϕ30
40	ϕ40
50	ϕ50

② Screw Size

Symbol	Size・Applicable cup size
G1	G1/8・All size
G2	G1/4・ϕ30～50
G3	G3/8・ϕ30～50

③ Cup Rubber Material

Symbol	Material
S4	Silicone rubber Hardness 40
S5	Silicone rubber Hardness 55

※Please consult with us for other material.

④ Filter

F	With
Blank	N/A

Combination Table

Model number	Cup	Fitting	Fitting weight (g)
PL-20-G1-□ (-F)	PLG-20-□	PL-20-G1-K (-F)	5.4
PL-30-G1-□ (-F)	PLG-30-□	PL-30-G1-K (-F)	14.2
PL-30-G2-□ (-F)		PL-30-G2-K (-F)	14.6
PL-30-G3-□ (-F)		PL-30-G3-K (-F)	15.4
PL-40-G1-□ (-F)	PLG-40-□	PL-40-G1-K (-F)	20.0
PL-40-G2-□ (-F)		PL-40-G2-K (-F)	20.4
PL-40-G3-□ (-F)		PL-40-G3-K (-F)	21.2
PL-50-G1-□ (-F)	PLG-50-□	PL-50-G1-K (-F)	27.5
PL-50-G2-□ (-F)		PL-50-G2-K (-F)	27.9
PL-50-G3-□ (-F)		PL-50-G3-K (-F)	28.7

※□ in the table indicates the cup material.
※ Weight indicates the value of cup without filter.
※ The weight of filter is 0.1g.

Fitting Specifications

Cup Size	ϕ20	ϕ30	ϕ40	ϕ50
Screw Size	G1/8	G1/8, G1/4, G3/8		
Material	Aluminum			
Filter	SUS (MESH60) Note1			
Packing	NBR			

Note1) When selecting with filter.

Simple constitution of the cup and the fitting

Dimensions

(mm)

PL-20

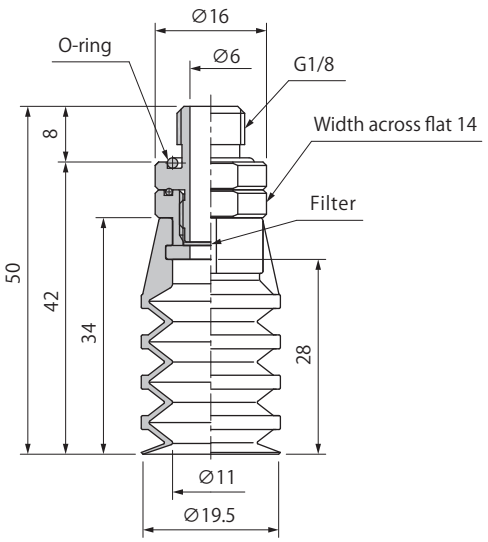

Model number
PL-20-G1-□ (-F)

※□ in the table indicates the cup material.

PL-30

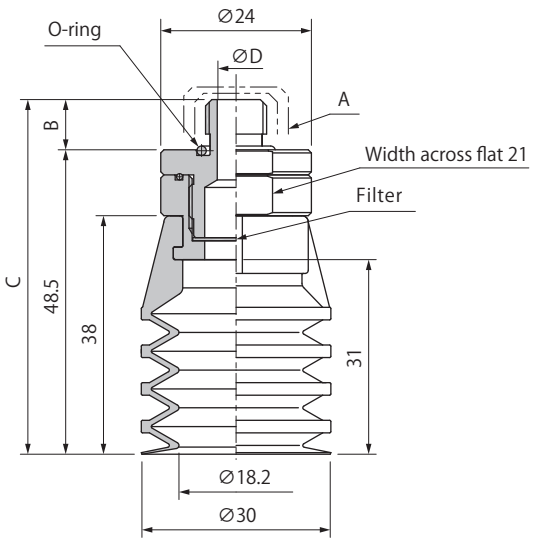

Model number	A	B	C	D
PL-30-G1-□ (-F)	G1/8	8	56.5	6
PL-30-G2-□ (-F)	G1/4	9	57.5	8
PL-30-G3-□ (-F)	G3/8	10	58.5	10

※□ in the table indicates the cup material.

PL-40

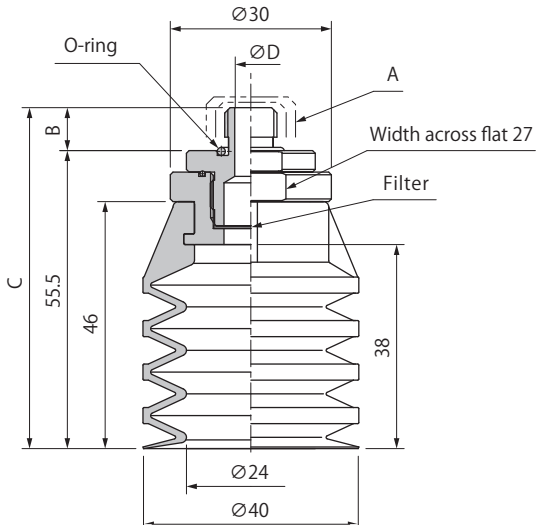

Model number	A	B	C	D
PL-40-G1-□ (-F)	G1/8	8	63.5	6
PL-40-G2-□ (-F)	G1/4	9	64.5	8
PL-40-G3-□ (-F)	G3/8	10	65.5	10

※□ in the table indicates the cup material.

PL-50

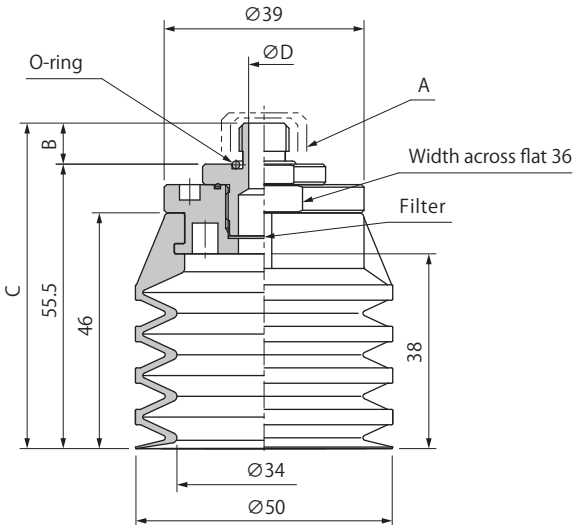

Model number	A	B	C	D
PL-50-G1-□ (-F)	G1/8	8	63.5	6
PL-50-G2-□ (-F)	G1/4	9	64.5	8
PL-50-G3-□ (-F)	G3/8	10	65.5	10

※□ in the table indicates the cup material.

PN Series

Cup with Thin Lip

RoHS

The cup with thin lip
For workpieces with smooth and pliable surfaces like paper or vinyl sheets!

The cup for Pouch film new appearance! PNG-132(ϕ15), 133(ϕ25), 134(ϕ35)

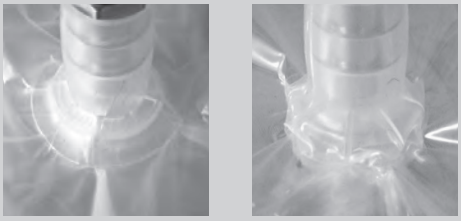

With special lip structure.
More suitable for handling vinyl, film, etc. !

Bag of soup

Thin workpieces

Wide range of cup sizes.

ϕ15	ϕ17	ϕ17.6	ϕ18	ϕ20	ϕ23	ϕ24	ϕ24.8	ϕ25	ϕ27	ϕ31	ϕ34	ϕ35	ϕ40	ϕ49

Various fittings for many kinds of applications.

Fixed fitting

Spring fitting

Suction Cup

PNG	Cup size (mm) ϕ15～49		P.397

Fitting

Type	Applicable cup size (mm)	Stroke (mm)	Vacuum port	Piping・Connector	Page
Cup with fixed fitting PNTK	ϕ 15～35	N/A	Top	Barb	P.403
	ϕ 40, 49			Female screw	
Cup with fixed fitting PNYK	ϕ 15～35	N/A	Side	Barb	P.403
	ϕ 40, 49			Female screw	
Cup with spring fitting NAPNTS	ϕ 15～25	3, 10, 15	Top	Female screw Push-in Barb	P.411
	ϕ 23～35	6, 15, 30			
	ϕ 40, 49	10, 30, 50			
Cup with spring fitting NAPNYS	ϕ 15～25	3, 10, 15	Side	Female screw Push-in Barb	P.411
	ϕ 23～35	6, 15, 30			
	ϕ 40, 49	10, 30, 50			
Cup with non-rotation spring fitting NAPNTH	ϕ 15～25	3, 10, 15	Top	Female screw Push-in Barb	P.419
	ϕ 23～35	6, 15, 30			
Cup with non-rotation spring fitting NAPNYH	ϕ 15～25	3, 10, 15	Side	Female screw Push-in Barb	P.419
	ϕ 23～35	6, 15, 30			
Setting screw	ϕ 15～49	-	-	-	P.503

Suction Cup Selection Guide ••→ P.163

PNG Cup with Thin Lip

How to Order

PNG — 101 — N
① ②

① Cup Size (mm)

Symbol	Cup size	Symbol	Cup size
101	φ31	116	φ18
102	φ25	117	φ17.6
103	φ25	121	φ31
104	φ24.8	122	φ34
106	φ25	123	φ15
107	φ49	125	φ24
108	φ40	130A	φ20
109	φ17	130B	φ20
110	φ23	131	φ25
111	φ25	132	φ15
112	φ27	133	φ25
114	φ17	134	φ35

② Cup Rubber Material

Symbol	Material	Applicable cup size
N	NBR(Nitrile rubber)	101/116/122/130A/130B/131/132/133/134 Note1
S	Silicone rubber hardness 55	101/114/116/117/121/130A/130B/131/132/133/134
SI30	Silicone rubber hardness 30	107/123/131/132/133/134
U	Urethane rubber	104/110/116/125/130B
F	Fluorine rubber	130B
NR	Natural rubber	101/102/103/104/106/107/108/109/110/111/112/114/123

Note1) The hardness of 131/132/133/134 is 40, and another type is 55.
※Please consult with us for other material.

Cup Rubber Material Standard Specifications

Symbol	Material	Hardness (A/s)	Ambient temperature (℃)	Color
N	NBR(Nitrile rubber)	55/40 Note1	-26～120	Black
S	Silicone rubber	55	-60～250	Translucent white
SI30	Silicone rubber	30	-60～250	Translucent white
U	Urethane rubber	55	-20～75	Blue
F	Fluorine rubber	70	-10～230	Black with white dot
NR	Natural rubber	40	-60～80	Light brown

Note1) The hardness of 131/132/133/134 is 40.

Applicable Rubber Material Table

Material	Color	Symbol	Round type																							
			101	102	103	104	106	107	108	109	110	111	112	114	116	117	121	122	123	125	130A	130B	131	132	133	134
NBR (Nitrile rubber hardness 55)	Black	N	●	×	×	×	×	×	×	×	×	×	×	×	●	×	×	●	×	×	●	●	×	×	×	×
NBR (Nitrile rubber hardness 40)	Black	N	×	×	×	×	×	×	×	×	×	×	×	×	×	×	×	×	×	×	×	×	●	●	●	●
Silicone rubber (hardness 55)	Translucent white	S	●	×	×	×	×	×	×	×	×	×	×	●	●	●	●	×	×	×	●	●	●	●	●	●
Silicone rubber (hardness 30)	Translucent white	SI30	×	×	×	×	×	●	×	×	×	×	×	×	×	×	×	×	●	×	×	×	●	●	●	●
Urethane rubber	Blue	U	×	×	×	●	×	×	×	×	●	×	×	×	●	×	×	×	×	●	×	●	×	×	×	×
Fluorine rubber	Black with white dot	F	×	×	×	×	×	×	×	×	×	×	×	×	×	×	×	×	×	×	×	●	×	×	×	×
Natural rubber	Light brown	NR	●	●	●	●	●	●	●	●	●	●	●	●	×	×	×	×	●	×	×	×	×	×	×	×

●: In stock ○Made to order ×: None
※Please consult with us for other material.

Dimensions

(mm)

PNG-101

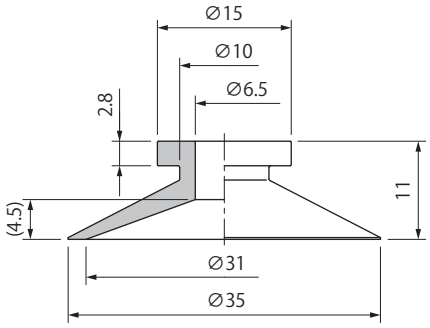

PNG-102

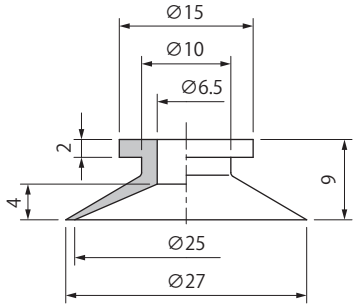

PNG-103

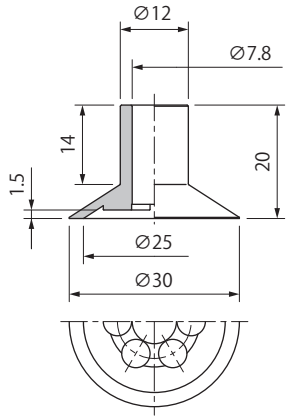

PNG-104

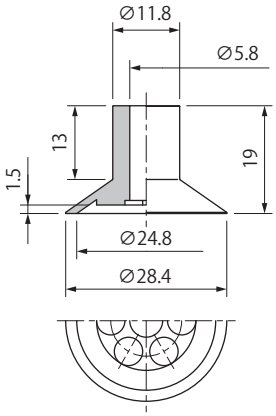

PNG-106

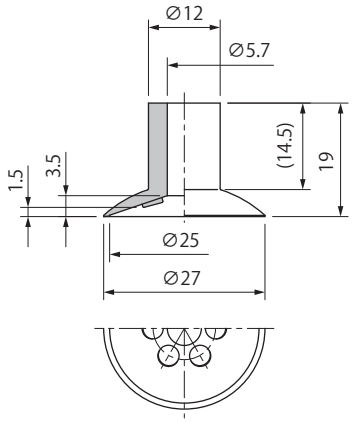

PNG-107

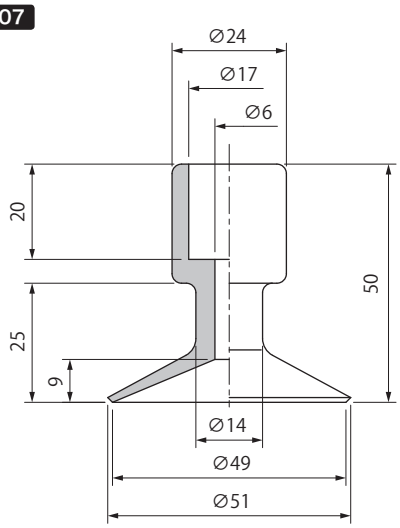

Weight

(g)

Model ＼ Material	N	S	SI30	U	F	NR	Applicable setting screw (Screw specifications)
PNG-101	2.3	2.3	–	–	–	2.3	TN-PN-101-M6 (Male M6X1.0)
PNG-102	–	–	–	–	–	1.1	TN-PN-102-M6 (Male M6X1.0)
PNG-103	–	–	–	–	–	2.7	TN-PN-103-M6 (Male M6X1.0)
PNG-104	–	–	–	2.6	–	2.4	TN-PN-104-M6 (Male M6X1.0)
PNG-106	–	–	–	–	–	2.4	TN-PN-104-M6 (Male M6X1.0)
PNG-107	–	–	15.5	–	–	15.5	TN-PN-107-M10 (Male M10X1.25)

Symbol	Material
N	NBR(Nitrile rubber)
S	Silicone rubber
SI30	Silicone rubber
U	Urethane rubber
F	Fluorine rubber
NR	Natural rubber

※Please refer to P.503 for setting screw detailed specifications.

PNG Cup with Thin Lip

Dimensions

(mm)

PNG-108

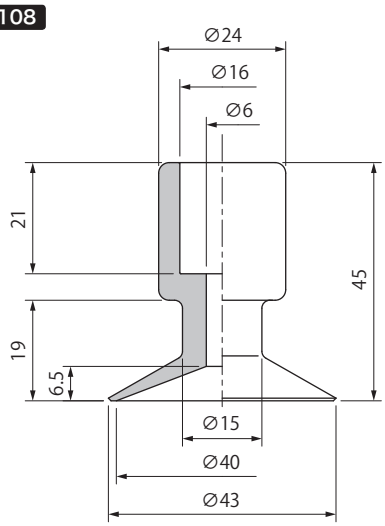

PNG-109

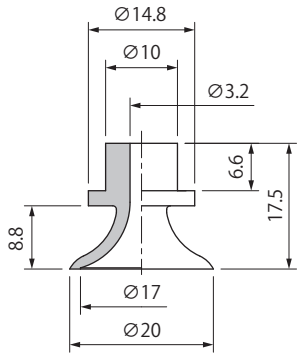

PNG-110

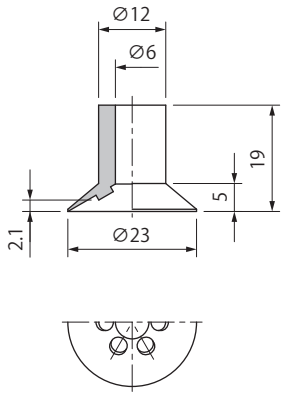

PNG-111

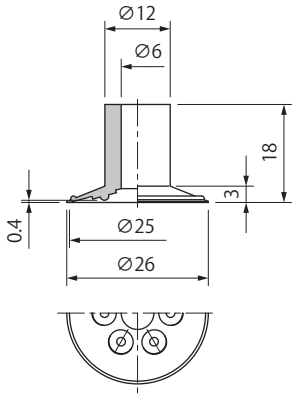

PNG-112

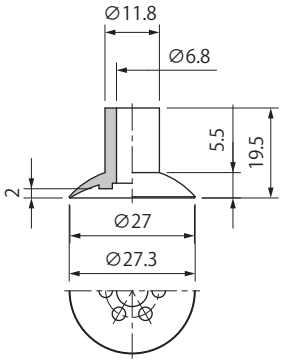

PNG-114

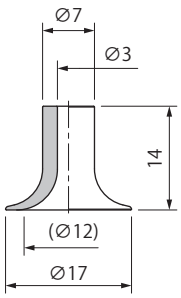

Weight

(g)

Model ＼ Material	N	S	SI30	U	F	NR	Applicable setting screw (Screw specifications)
PNG-108	–	–	–	–	–	14.0	TN-PN-108-M10 (Female M10X1.25)
PNG-109	–	–	–	–	–	1.4	TN-PN-109-M5 (Male M5X0.8)
PNG-110	–	–	–	2.1	–	2.0	TN-PN-104-M6 (Male M6X1.0)
PNG-111	–	–	–	–	–	1.8	
PNG-112	–	–	–	–	–	2.2	TN-PN-112-M6 (Male M6X1.0)
PNG-114	–	0.7	–	–	–	0.7	TN-PN-114-M5 (Male M5X0.8)

Symbol	Material
N	NBR(Nitrile rubber)
S	Silicone rubber
SI30	Silicone rubber
U	Urethane rubber
F	Fluorine rubber
NR	Natural rubber

※Please refer to P.503 for setting screw detailed specifications.

Dimensions

(mm)

PNG-116

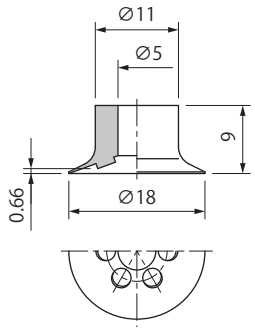

PNG-117

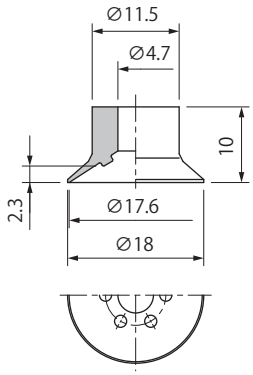

PNG-121

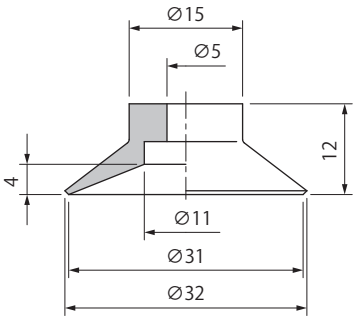

PNG-122

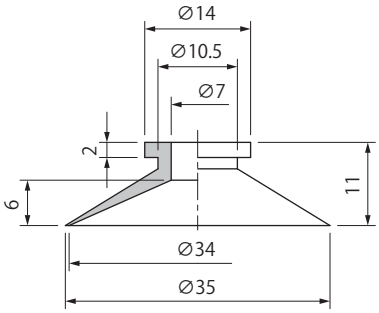

Weight

(g)

Model ＼ Material	N	S	SI30	U	F	NR	Applicable setting screw (Screw specifications)
PNG-116	0.8	0.8	–	0.8	–	–	TN-PN-116-M5 (Male M5X0.8)
PNG-117	–	0.9	–	–	–	–	
PNG-121	–	2.9	–	–	–	–	TN-PF-20-M5 (Male M5X0.8)
PNG-122	1.4	–	–	–	–	–	TN-PN-122-M6 (Male M6X1.0)

※Please refer to P.503 for setting screw detailed specifications.

Symbol	Material
N	NBR(Nitrile rubber)
S	Silicone rubber
SI30	Silicone rubber
U	Urethane rubber
F	Fluorine rubber
NR	Natural rubber

PNG Cup with Thin Lip

Dimensions

(mm)

PNG-123

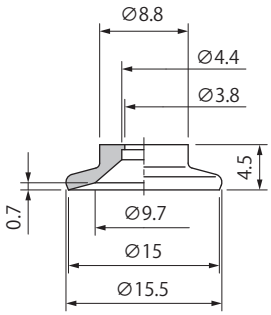

PNG-125

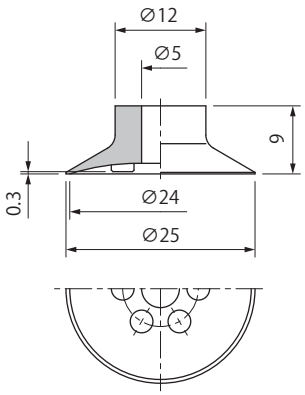

PNG-130A

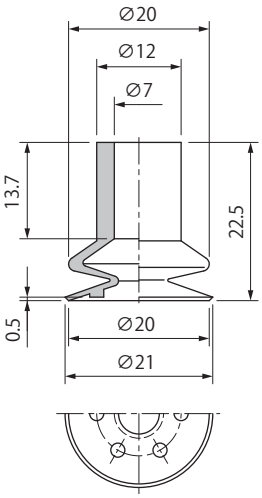

PNG-130B

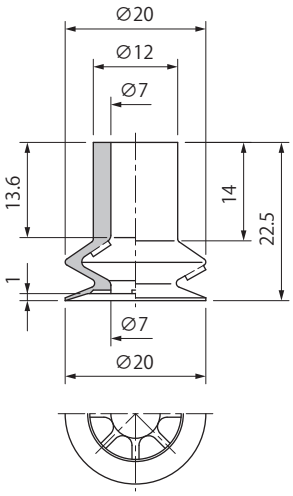

Weight

(g)

Model ＼ Material	N	S	SI30	U	F	NR	Applicable setting screw (Screw specifications)
PNG-123	–	–	0.4	–	–	0.4	TN-PN-123-M5 (Male M5X0.8)
PNG-125	–	–	–	1.6	–	–	TN-PN-116-M5 (Male M5X0.8)
PNG-130A	2.3	2.3	–	–	–	–	TN-PN-130-M5 (Male M5X0.8)
PNG-130B	2.2	2.2	–	2.4	3.6	–	

※Please refer to P.503 for setting screw detailed specifications.

Symbol	Material
N	NBR(Nitrile rubber)
S	Silicone rubber
SI30	Silicone rubber
U	Urethane rubber
F	Fluorine rubber
NR	Natural rubber

Dimensions

(mm)

PNG-131

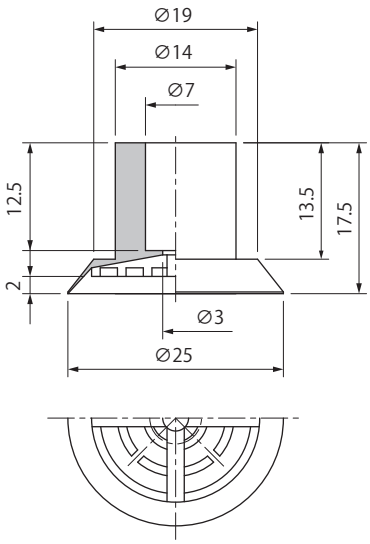

PNG-132

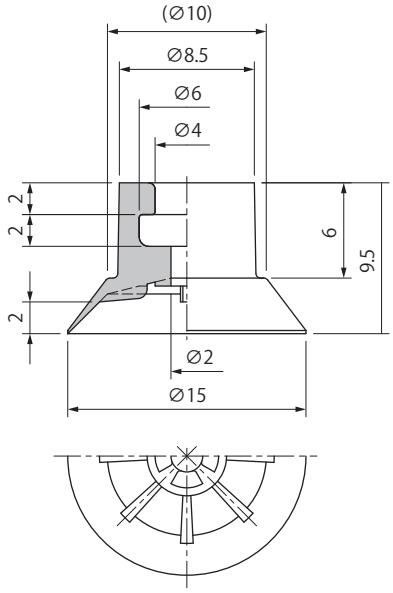

PNG-133

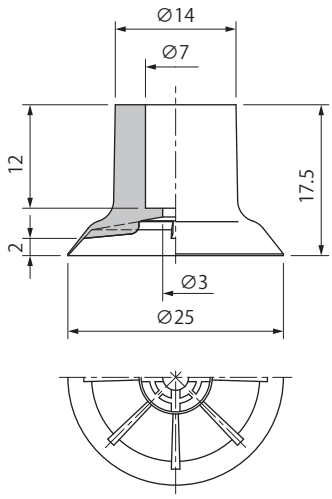

PNG-134

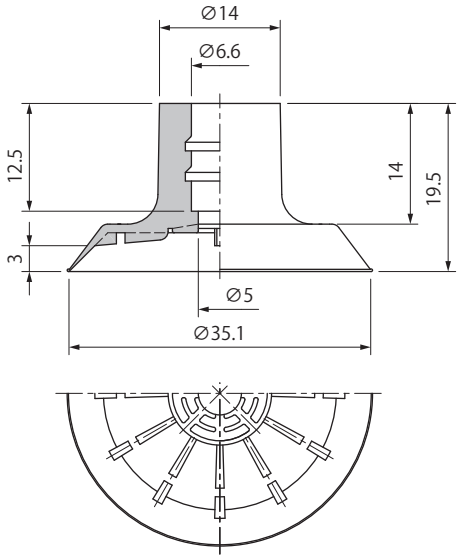

Weight

(g)

Model ＼ Material	N	S	SI30	U	F	NR	Applicable setting screw (Screw specifications)
PNG-131	2.4	2.4	2.2	-	-	-	TN-PN-130-M5 (Male M5X0.8)
PNG-132	0.5	0.5	0.4	-	-	-	TN-PS-10-M5 (Male M5X0.8) TN-PS-10-M5F (Female M5X0.8)
PNG-133	2.4	2.4	2.2	-	-	-	TN-PN-130-M5 (Male M5X0.8)
PNG-134	3.3	3.3	3.0	-	-	-	

※Please refer to P.503 for setting screw detailed specifications.

Symbol	Material
N	NBR(Nitrile rubber)
S	Silicone rubber
SI30	Silicone rubber
U	Urethane rubber
F	Fluorine rubber
NR	Natural rubber

PNTK・YK Cup with Fixed Fitting

Consisting of fitting, setting screw, suction cup.

ϕ15 (PNG-132)

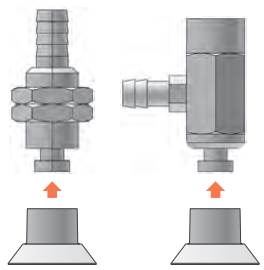

Attach the cup directly to the fitting

ϕ15~49 (except for PNG-132)

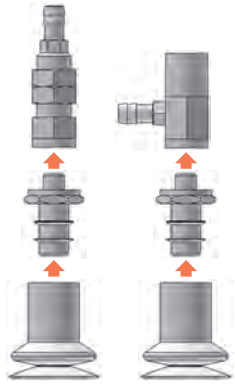

Attach the cup to the fitting with setting screw

How to Order

PN T K – 101 – N

① ② ③

① Vacuum Port

T	Top
Y	Side

① Cup Size (mm)

Symbol	Cup size	Symbol	Cup size
101	ϕ31	116	ϕ18
102	ϕ25	117	ϕ17.6
103	ϕ25	121	ϕ31
104	ϕ24.8	122	ϕ34
106	ϕ25	123	ϕ15
107	ϕ49	125	ϕ24
108	ϕ40	130A	ϕ20
109	ϕ17	130B	ϕ20
110	ϕ23	131	ϕ25
111	ϕ25	132	ϕ15
112	ϕ27	133	ϕ25
114	ϕ17	134	ϕ35

③ Cup Rubber Material

Symbol	Material	Applicable cup size
N	NBR(Nitrile rubber)	101/116/122/130A/130B/131/132/133/134 注1
S	Silicone rubber hardness 55	101/114/116/117/121/130A/130B/131/132/133/134
SI30	Silicone rubber hardness 30	107/123/131/132/133/134
U	Urethane rubber	104/110/116/125/130B
F	Fluorine rubber	130B
NR	Natural rubber	101/102/103/104/106/107/108/109/110/111/112/114/123

Note1) The hardness of 131/132/133/134 is 40, and another type is 55.
※Please consult with us for other material.

Combination Table

Top Port

Model number	Cup	Setting screw	Fitting	Piping specifications	
PNTK-101-□	PNG-101-□	TN-PN-101-M6	PFTK-25-K	Barb	ϕ6X4
PNTK-102-□	PNG-102-□	TN-PN-102-M6			
PNTK-103-□	PNG-103-□	TN-PN-103-M6			
PNTK-104-□	PNG-104-□	TN-PN-104-M6			
PNTK-106-□	PNG-106-□				
PNTK-107-□	PNG-107-□	TN-PN-107-M10	PFTK-60-K	Rc1/8 (Female)	
PNTK-108-□	PNG-108-□	TN-PN-108-M10			
PNTK-109-□	PNG-109-□	TN-PN-109-M5	PFTK-15-K	Barb	ϕ6X4
PNTK-110-□	PNG-110-□	TN-PN-104-M6	PFTK-25-K		
PNTK-111-□	PNG-111-□				
PNTK-112-□	PNG-112-□	TN-PN-112-M6			
PNTK-114-□	PNG-114-□	TN-PN-114-M5	PFTK-15-K		
PNTK-116-□	PNG-116-□	TN-PN-116-M5			
PNTK-117-□	PNG-117-□				
PNTK-121-□	PNG-121-□	TN-PF-20-M5			
PNTK-122-□	PNG-122-□	TN-PN-122-M6	PFTK-25-K		
PNTK-123-□	PNG-123-□	TN-PN-123-M5	PFTK-15-K		
PNTK-125-□	PNG-125-□	TN-PN-116-M5			
PNTK-130A-□	PNG-130A-□	TN-PN-130-M5			
PNTK-130B-□	PNG-130B-□				
PNTK-131-□	PNG-131-□				
PNTK-132-□	PNG-132-□	Attach the cup directly to the fitting	PFTK-5A-K		
PNTK-133-□	PNG-133-□	TN-PN-130-M5	PFTK-15-K		
PNTK-134-□	PNG-134-□				

※□ in the table indicates the cup material.

Side Port

Model number	Cup	Setting screw	Fitting	Piping specifications	
PNYK-101-□	PNG-101-□	TN-PN-101-M6	PFYK-25-K	Barb	ϕ6X4
PNYK-102-□	PNG-102-□	TN-PN-102-M6			
PNYK-103-□	PNG-103-□	TN-PN-103-M6			
PNYK-104-□	PNG-104-□	TN-PN-104-M6			
PNYK-106-□	PNG-106-□				
PNYK-107-□	PNG-107-□	TN-PN-107-M10	PFYK-60-K	Rc1/8 (Female)	
PNYK-108-□	PNG-108-□	TN-PN-108-M10			
PNYK-109-□	PNG-109-□	TN-PN-109-M5	PFYK-15-K	Barb	ϕ6X4
PNYK-110-□	PNG-110-□	TN-PN-104-M6	PFYK-25-K		
PNYK-111-□	PNG-111-□				
PNYK-112-□	PNG-112-□	TN-PN-112-M6			
PNYK-114-□	PNG-114-□	TN-PN-114-M5	PFYK-15-K		
PNYK-116-□	PNG-116-□	TN-PN-116-M5			
PNYK-117-□	PNG-117-□				
PNYK-121-□	PNG-121-□	TN-PF-20-M5			
PNYK-122-□	PNG-122-□	TN-PN-122-M6	PFYK-25-K		
PNYK-123-□	PNG-123-□	TN-PN-123-M5	PFYK-15-K		
PNYK-125-□	PNG-125-□	TN-PN-116-M5			
PNYK-130A-□	PNG-130A-□	TN-PN-130-M5			
PNYK-130B-□	PNG-130B-□				
PNYK-131-□	PNG-131-□				
PNYK-132-□	PNG-132-□	Attach the cup directly to the fitting	PFYK-5A-K		
PNYK-133-□	PNG-133-□	TN-PN-130-M5	PFYK-15-K		
PNYK-134-□	PNG-134-□				

※□ in the table indicates the cup material.

PNTK•YK Cup with Fixed Fitting

Dimensions

(mm)

Top Port PNTK-101/102/122

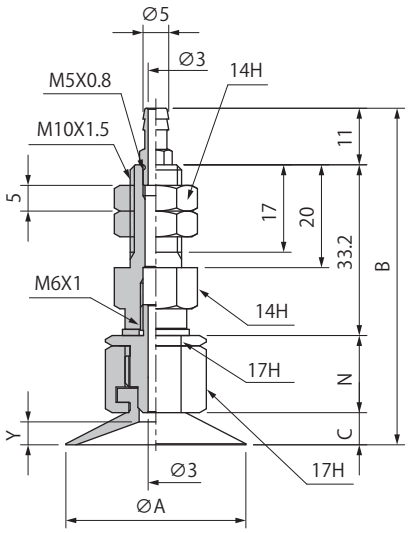

Model number	A	B	C	N	Y	Weight (g)
PNTK-101-□	35	65.5	6.3	15	4.5	68
PNTK-102-□	27	63.2	5	14	4	67
PNTK-122-□	35	65.2	7.5	13.5	6	68

※□ in the table indicates the cup material.
※ The weight value of 101/122 is when NBR (Nitrile rubber) selected.
※ The weight value of 102 is when NR (Natural rubber) selected.

Top Port PNTK-103/104/106/110/111/112

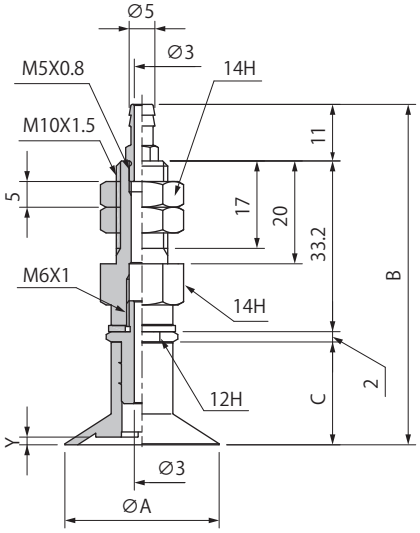

Model number	A	B	C	Y	Weight (g)
PNTK-103-□	30	66.2	20	1.5	47
PNTK-104-□	28.4	65.2	19		
PNTK-106-□	27				39
PNTK-110-□	23			2.1	
PNTK-111-□	26	64.2	18	0.4	
PNTK-112-□	27	65.7	19.5	2	

※□ in the table indicates the cup material.
※ The weight value is when NR (Natural rubber) selected.

Top Port PNTK-107/108

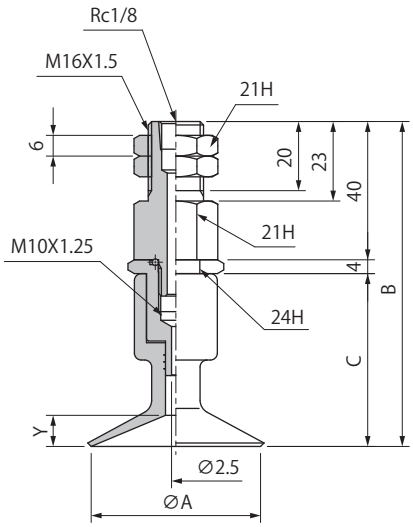

Model number	A	B	C	Y	Weight (g)
PNTK-107-□	49	94	50	9	168
PNTK-108-□	40	89	45	6.5	166

※□ in the table indicates the cup material.
※ The weight value is when NR (Natural rubber) selected.

Top Port PNTK-109

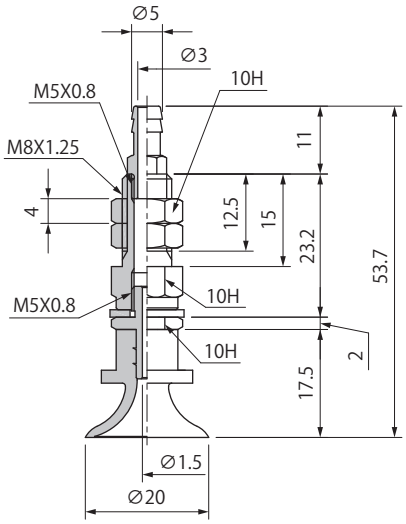

Model number	Weight (g)
PNTK-109-□	17

※□ in the table indicates the cup material.
※ The weight value is when NR (Natural rubber) selected.

Dimensions

(mm)

Top Port PNTK-114

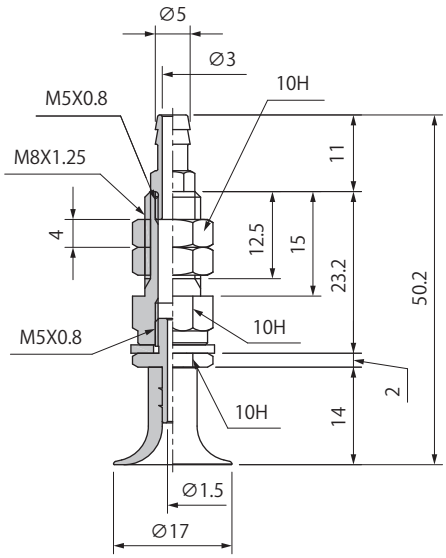

Model number	Weight (g)
PNTK-114-□	17

※□ in the table indicates the cup material.
※ The weight value is when NR (Natural rubber) selected.

Top Port PNTK-116/117/125

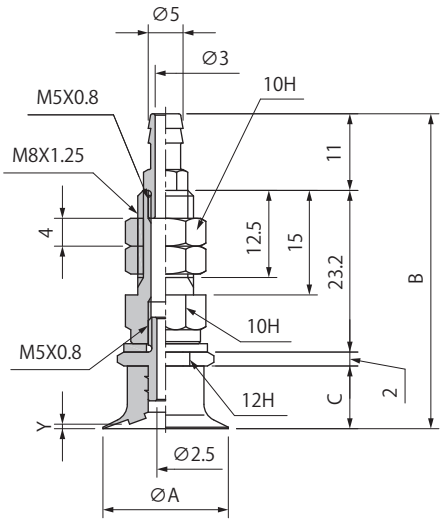

Model number	A	B	C	Y	Weight (g)
PNTK-116-□	18	45.2	9	0.66	18
PNTK-117-□		46.2	10	2.3	
PNTK-125-□	25	45.2	9	0.3	

※□ in the table indicates the cup material.
※ The weight value of 116/117 is when S (Silicone rubber) selected.
※ The weight value of 125 is when U (Urethane rubber) selected.

Top Port PNTK-121

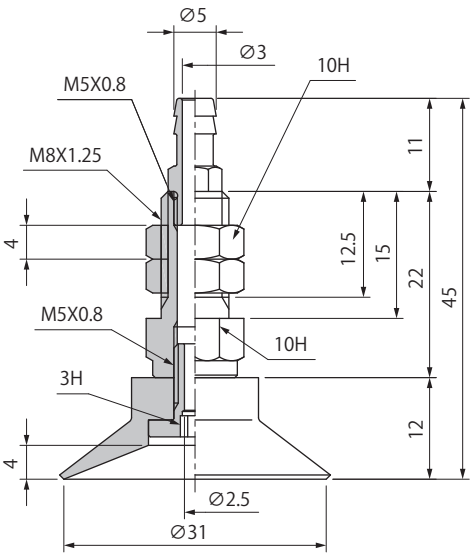

Model number	Weight (g)
PNTK-121-□	18

※□ in the table indicates the cup material.
※ The weight value is when S (Silicone rubber) selected.

Top Port PNTK-123

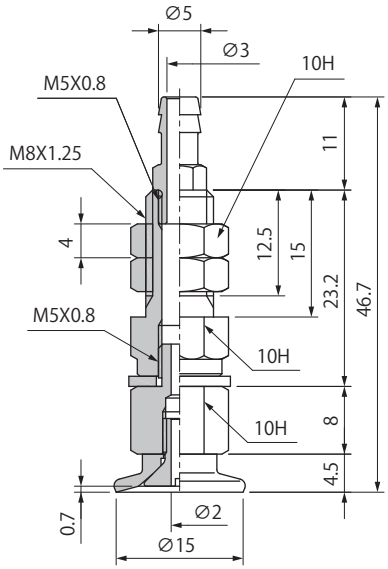

Model number	Weight (g)
PNTK-123-□	22

※□ in the table indicates the cup material.
※ The weight value is when NR (Natural rubber) selected.

PNTK•YK Cup with Fixed Fitting

Dimensions

(mm)

Top Port PNTK-130A/130B

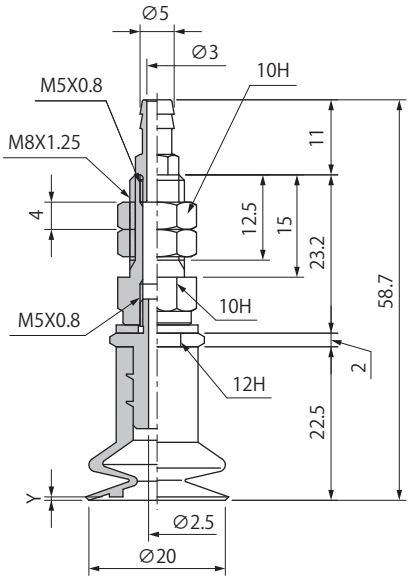

Model number	Y	Weight (g)
PNTK-130A-□	0.5	22
PNTK-130B-□	1	21

※□ in the table indicates the cup material.
※ The weight value is when NBR（Nitrile rubber）selected.

Top Port PNTK-131

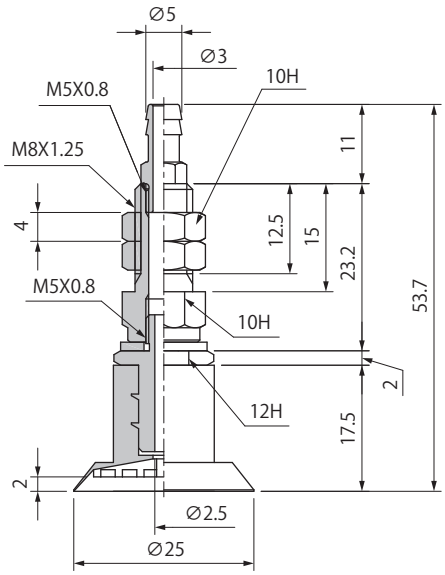

Model number	Weight (g)
PNTK-131-□	22

※□ in the table indicates the cup material.
※ The weight value is when NBR（Nitrile rubber）selected.

Top Port PNTK-132

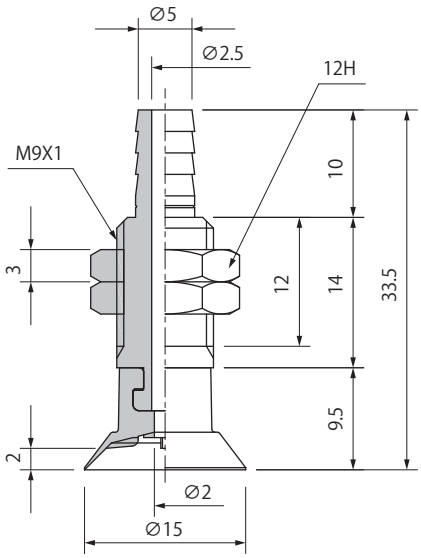

Model number	Weight (g)
PNTK-132-□	12.3

※□ in the table indicates the cup material.
※ The weight value is when NBR（Nitrile rubber）selected.

Top Port PNTK-133/134

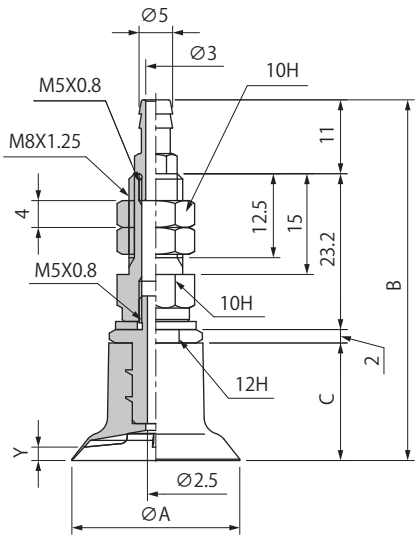

Model number	A	B	C	Y	Weight (g)
PNTK-133-□	25	53.7	17.5	2	22
PNTK-134-□	35	55.7	19.5	3	22.9

※□ in the table indicates the cup material.
※ The weight value is when NBR（Nitrile rubber）selected.

Dimensions

(mm)

Side Port PNYK-101/102/122

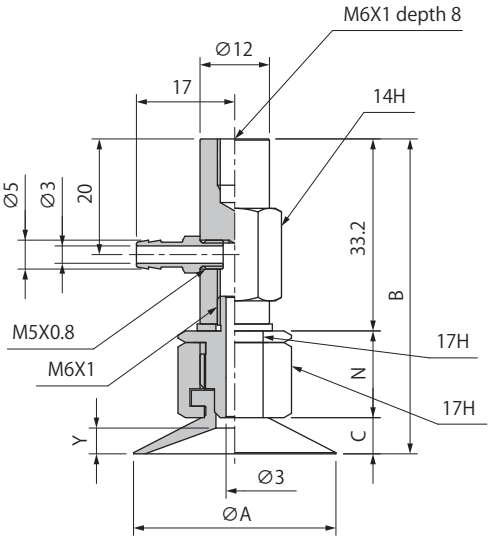

Model number	A	B	C	N	Y	Weight (g)
PNYK-101-□	35	54.5	6.3	15	4.5	72
PNYK-102-□	27	52.2	5	14	4	71
PNYK-122-□	35	54.2	7.5	13.5	6	72

※□ in the table indicates the cup material.
※ The weight value of 101/122 is when NBR (Nitrile rubber) selected.
※ The weight value of 102 is when NR (Natural rubber) selected.

Side Port PNYK-103/104/106/110/111/112

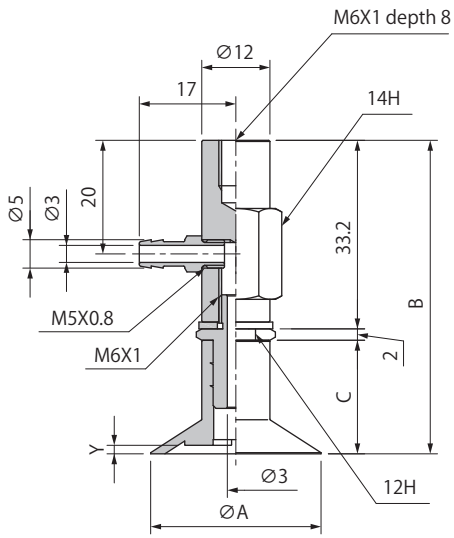

Model number	A	B	C	Y	Weight (g)
PNYK-103-□	30	55.2	20	1.5	51
PNYK-104-□	28.4	54.2	19		
PNYK-106-□	27				43
PNYK-110-□	23			2.1	
PNYK-111-□	26	53.2	18	0.4	
PNYK-112-□	27	54.7	19.5	2	

※□ in the table indicates the cup material.
※ The weight value is when NR (Natural rubber) selected.

Side Port PNYK-107/108

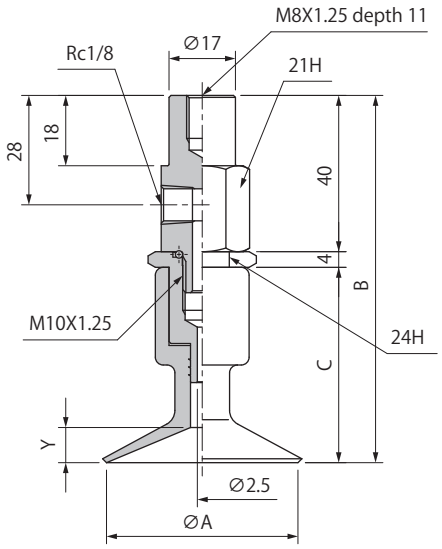

Model number	A	B	C	Y	Weight (g)
PNYK-107-□	49	94	50	9	164
PNYK-108-□	40	89	45	6.5	162

※□ in the table indicates the cup material.
※ The weight value is when NR (Natural rubber) selected.

Side Port PNYK-109

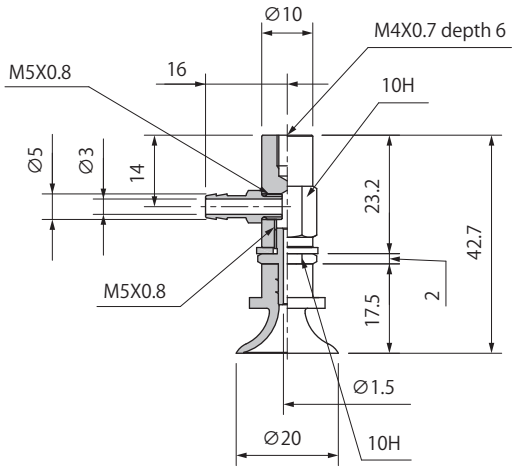

Model number	Weight (g)
PNYK-109-□	20

※□ in the table indicates the cup material.
※ The weight value is when NR (Natural rubber) selected.

PNTK•YK Cup with Fixed Fitting

Dimensions

(mm)

Side Port PNYK-114

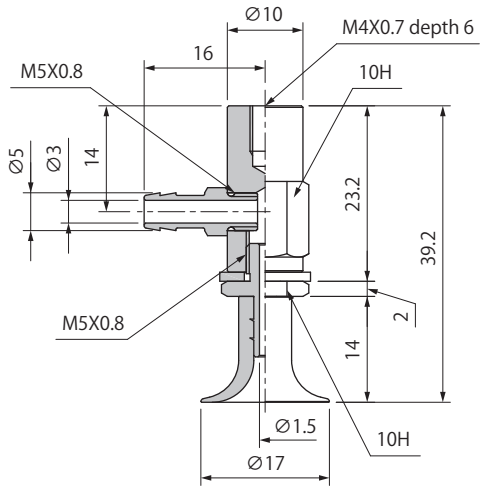

Model number	Weight (g)
PNYK-114-□	20

※□ in the table indicates the cup material.
※ The weight value is when NR (Natural rubber) selected.

Side Port PNYK-116/117/125

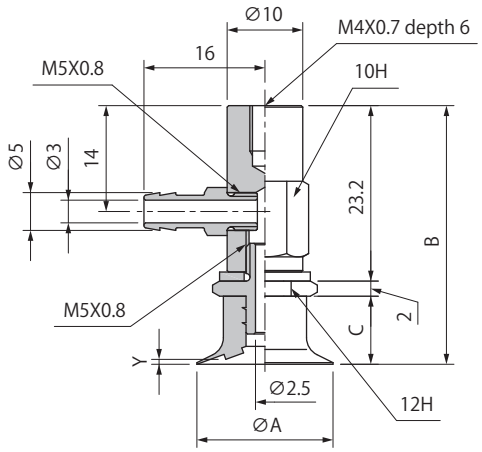

Model number	A	B	C	Y	Weight (g)
PNYK-116-□	18	34.2	9	0.66	21
PNYK-117-□		35.2	10	2.3	
PNYK-125-□	25	34.2	9	0.3	

※□ in the table indicates the cup material.
※ The weight value of 116/117 is when S (Silicone rubber) selected.
※ The weight value of 125 is when U (Urethane rubber) selected.

Side Port PNYK-121

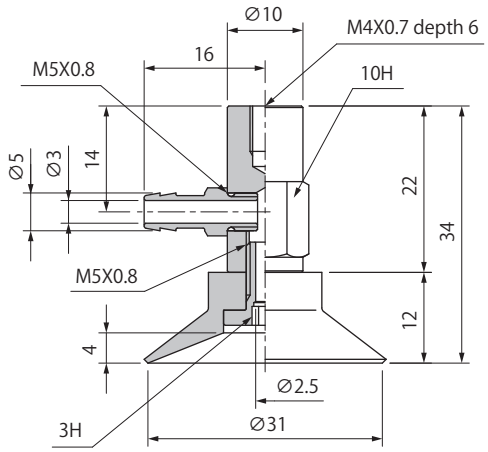

Model number	Weight (g)
PNYK-121-□	21

※□ in the table indicates the cup material.
※ The weight value is when S (Silicone rubber) selected.

Side Port PNYK-123

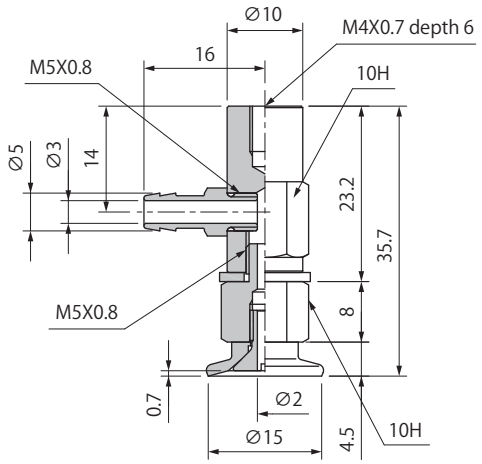

Model number	Weight (g)
PNYK-123-□	25

※□ in the table indicates the cup material.
※ The weight value is when NR (Natural rubber) selected.

Dimensions

(mm)

Side Port PNYK-130A/130B

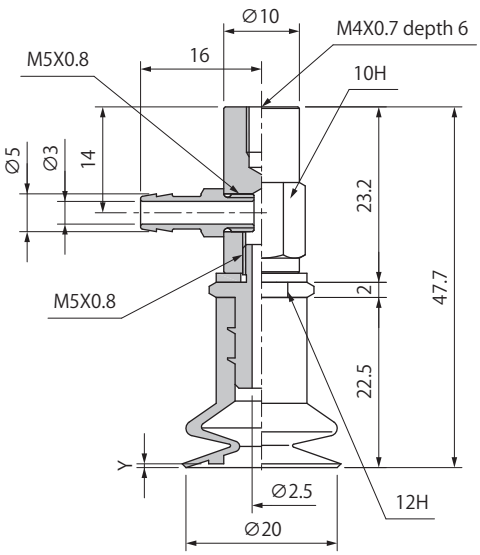

Model number	Y	Weight (g)
PNYK-130A-□	0.5	25
PNYK-130B-□	1	24

※□ in the table indicates the cup material.
※ The weight value is when NBR（Nitrile rubber）selected.

Side Port PNYK-131

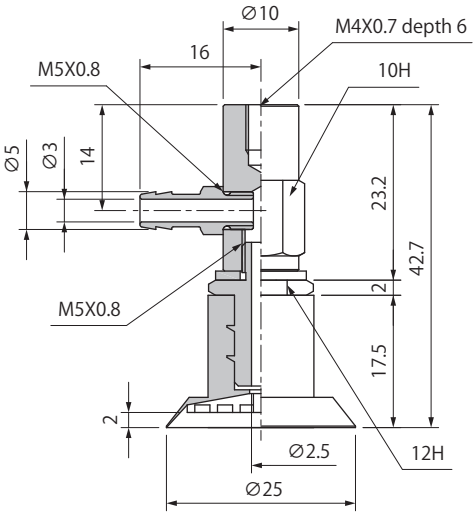

Model number	Weight (g)
PNYK-131-□	25

※□ in the table indicates the cup material.
※ The weight value is when NBR（Nitrile rubber）selected.

Side Port PNYK-132

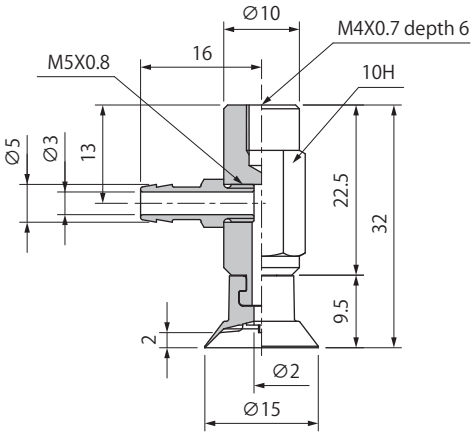

Model number	Weight (g)
PNYK-132-□	17.3

※□ in the table indicates the cup material.
※ The weight value is when NBR（Nitrile rubber）selected.

Side Port PNYK-133/134

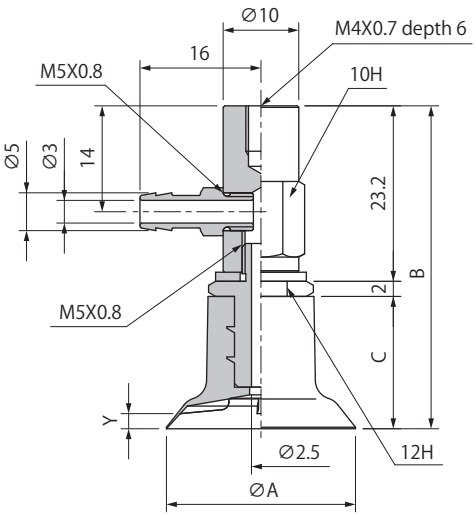

Model number	A	B	C	Y	Weight (g)
PNYK-133-□	25	42.7	17.5	2	22
PNYK-134-□	35	44.7	19.5	3	22.9

※□ in the table indicates the cup material.
※ The weight value is when NBR（Nitrile rubber）selected.

NAPNTS·YS Cup with Spring Fitting

Consisting of fitting, setting screw, suction cup.

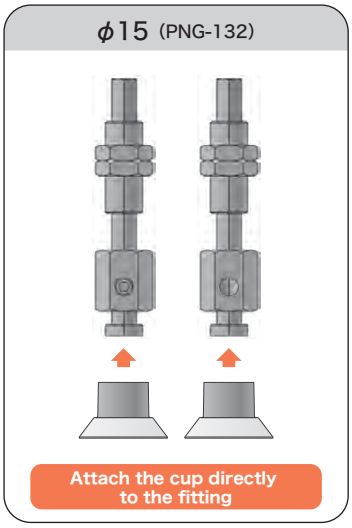

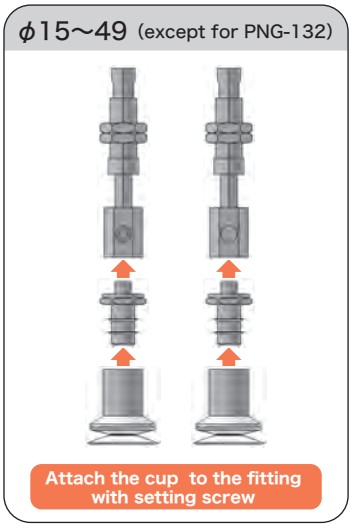

How to Order

NAPN **T** S – **114-3** – **N** – **T**

① ② ③ ④

① Vacuum Port

T	Top
Y	Side

② Cup Size - Stroke (mm)

Symbol	Cup size Stroke	Symbol	Cup size Stroke	Symbol	Cup size Stroke
101-6	ϕ31-6	110-6	ϕ23-6	123-3	ϕ15-3
101-15	ϕ31-15	110-15	ϕ23-15	123-10	ϕ15-10
101-30	ϕ31-30	110-30	ϕ23-30	123-15	ϕ15-15
102-6	ϕ25-6	111-6	ϕ25-6	125-3	ϕ24-3
102-15	ϕ25-15	111-15	ϕ25-15	125-10	ϕ24-10
102-30	ϕ25-30	111-30	ϕ25-30	125-15	ϕ24-15
103-6	ϕ25-6	112-6	ϕ27-6	130A-3	ϕ20-3
103-15	ϕ25-15	112-15	ϕ27-15	130A-10	ϕ20-10
103-30	ϕ25-30	112-30	ϕ27-30	130A-15	ϕ20-15
104-6	ϕ24.8-6	114-3	ϕ17-3	130B-3	ϕ20-3
104-15	ϕ24.8-15	114-10	ϕ17-10	130B-10	ϕ20-10
104-30	ϕ24.8-30	114-15	ϕ17-15	130B-15	ϕ20-15
106-6	ϕ25-6	116-3	ϕ18-3	131-3	ϕ25-3
106-15	ϕ25-15	116-10	ϕ18-10	131-10	ϕ25-10
106-30	ϕ25-30	116-15	ϕ18-15	131-15	ϕ25-15
107-10	ϕ49-10	117-3	ϕ17.6-3	132-3	ϕ15-3
107-30	ϕ49-30	117-10	ϕ17.6-10	132-10	ϕ15-10
107-50	ϕ49-50	117-15	ϕ17.6-15	132-15	ϕ15-15
108-10	ϕ40-10	121-6	ϕ31-6	133-3	ϕ25-3
108-30	ϕ40-30	121-15	ϕ31-15	133-10	ϕ25-10
108-50	ϕ40-50	121-30	ϕ31-30	133-15	ϕ25-15
109-3	ϕ17-3	122-6	ϕ34-6	134-3	ϕ35-3
109-10	ϕ17-10	122-15	ϕ34-15	134-10	ϕ35-10
109-15	ϕ17-15	122-30	ϕ34-30	134-15	ϕ35-15

④ Connector

Blank	N/A
T	Barb
O	Push-in

※107/108 can not be selected "T" and "O".

③ Cup Rubber Material

Symbol	Material	Applicable cup size
N	NBR(Nitrile rubber)	101/116/122/130A/130B/131/132/133/134 注1
S	Silicone rubber hardness 55	101/114/116/117/121/130A/130B/131/132/133/134
SI30	Silicone rubber hardness 30	107/123/131/132/133/134
U	Urethane rubber	104/110/116/125/130B
F	Fluorine rubber	130B
NR	Natural rubber	101/102/103/104/106/107/108/109/110/111/112/114/123

Note1) The hardness of 131/132/133/134 is 40, and another type is 55.
※Please consult with us for other material.

Spring Specifications

Cup size	Unit	109/114/116/117/123/125/130A/130B/131/132/133/134			101/102/103/104/106/110/111/112/121/122			107/108		
Stroke	mm	3	10	15	6	15	30	10	30	50
Spring load at 0 stroke	N	0.61		0.64	2.45		2.95	8.82	6.76	8.33
Spring load at full stroke	N	0.77	1.17		3.43	4.93	5.88	11.8	15.6	19.6

Combination Table

Model number	Cup	Setting screw	Fitting	Piping specifications		
				Without connector・Blank	Barb connector・T	Push-in connector・O
NAPN○S-101-6-□ (-T/O)	PNG-101-□	TN-PN-101-M6	NAPF○S-20B-6-K (-T/O)	M5X0.8 (Female)	ϕ 6 X 4	
NAPN○S-101-15-□ (-T/O)			NAPF○S-20B-15-K (-T/O)			
NAPN○S-101-30-□ (-T/O)			NAPF○S-20B-30-K (-T/O)			
NAPN○S-102-6-□ (-T/O)	PNG-102-□	TN-PN-102-M6	NAPF○S-20B-6-K (-T/O)			
NAPN○S-102-15-□ (-T/O)			NAPF○S-20B-15-K (-T/O)			
NAPN○S-102-30-□ (-T/O)			NAPF○S-20B-30-K (-T/O)			
NAPN○S-103-6-□ (-T/O)	PNG-103-□	TN-PN-103-M6	NAPF○S-20B-6-K (-T/O)			
NAPN○S-103-15-□ (-T/O)			NAPF○S-20B-15-K (-T/O)			
NAPN○S-103-30-□ (-T/O)			NAPF○S-20B-30-K (-T/O)			
NAPN○S-104-6-□ (-T/O)	PNG-104-□	TN-PN-104-M6	NAPF○S-20B-6-K (-T/O)			
NAPN○S-104-15-□ (-T/O)			NAPF○S-20B-15-K (-T/O)			
NAPN○S-104-30-□ (-T/O)			NAPF○S-20B-30-K (-T/O)			
NAPN○S-106-6-□ (-T/O)	PNG-106-□		NAPF○S-20B-6-K (-T/O)			
NAPN○S-106-15-□ (-T/O)			NAPF○S-20B-15-K (-T/O)			
NAPN○S-106-30-□ (-T/O)			NAPF○S-20B-30-K (-T/O)			
NAPN○S-107-10-□	PNG-107-□	TN-PN-107-M10	NAPF○S-60-10-K	Rc1/8 (Female)	-	
NAPN○S-107-30-□			NAPF○S-60-30-K			
NAPN○S-107-50-□			NAPF○S-60-50-K			
NAPN○S-108-10-□	PNG-108-□	TN-PN-108-M10	NAPF○S-60-10-K			
NAPN○S-108-30-□			NAPF○S-60-30-K			
NAPN○S-108-50-□			NAPF○S-60-50-K			
NAPN○S-109-3-□ (-T/O)	PNG-109-□	TN-PN-109-M5	NAPC○S-10-3-K (-T/O)	M5X0.8 (Female)	ϕ 6 X 4	
NAPN○S-109-10-□ (-T/O)			NAPC○S-10-10-K (-T/O)			
NAPN○S-109-15-□ (-T/O)			NAPC○S-10-15-K (-T/O)			
NAPN○S-110-6-□ (-T/O)	PNG-110-□	TN-PN-104-M6	NAPF○S-20B-6-K (-T/O)			
NAPN○S-110-15-□ (-T/O)			NAPF○S-20B-15-K (-T/O)			
NAPN○S-110-30-□ (-T/O)			NAPF○S-20B-30-K (-T/O)			
NAPN○S-111-6-□ (-T/O)	PNG-111-□		NAPF○S-20B-6-K (-T/O)			
NAPN○S-111-15-□ (-T/O)			NAPF○S-20B-15-K (-T/O)			
NAPN○S-111-30-□ (-T/O)			NAPF○S-20B-30-K (-T/O)			
NAPN○S-112-6-□ (-T/O)	PNG-112-□	TN-PN-112-M6	NAPF○S-20B-6-K (-T/O)			
NAPN○S-112-15-□ (-T/O)			NAPF○S-20B-15-K (-T/O)			
NAPN○S-112-30-□ (-T/O)			NAPF○S-20B-30-K (-T/O)			
NAPN○S-114-3-□ (-T/O)	PNG-114-□	TN-PN-114-M5	NAPC○S-10-3-K (-T/O)			
NAPN○S-114-10-□ (-T/O)			NAPC○S-10-10-K (-T/O)			
NAPN○S-114-15-□ (-T/O)			NAPC○S-10-15-K (-T/O)			
NAPN○S-116-3-□ (-T/O)	PNG-116-□	TN-PN-116-M5	NAPC○S-10-3-K (-T/O)			
NAPN○S-116-10-□ (-T/O)			NAPC○S-10-10-K (-T/O)			
NAPN○S-116-15-□ (-T/O)			NAPC○S-10-15-K (-T/O)			
NAPN○S-117-3-□ (-T/O)	PNG-117-□		NAPC○S-10-3-K (-T/O)			
NAPN○S-117-10-□ (-T/O)			NAPC○S-10-10-K (-T/O)			
NAPN○S-117-15-□ (-T/O)			NAPC○S-10-15-K (-T/O)			
NAPN○S-121-6-□ (-T/O)	PNG-121-□	TN-PF-20-M5	NAPB○S-20-6-K (-T/O)			
NAPN○S-121-15-□ (-T/O)			NAPB○S-20-15-K (-T/O)			
NAPN○S-121-30-□ (-T/O)			NAPB○S-20-30-K (-T/O)			
NAPN○S-122-6-□ (-T/O)	PNG-122-□	TN-PN-122-M6	NAPF○S-20B-6-K (-T/O)			
NAPN○S-122-15-□ (-T/O)			NAPF○S-20B-15-K (-T/O)			
NAPN○S-122-30-□ (-T/O)			NAPF○S-20B-30-K (-T/O)			
NAPN○S-123-3-□ (-T/O)	PNG-123-□	TN-PN-123-M5	NAPC○S-10-3-K (-T/O)			
NAPN○S-123-10-□ (-T/O)			NAPC○S-10-10-K (-T/O)			
NAPN○S-123-15-□ (-T/O)			NAPC○S-10-15-K (-T/O)			
NAPN○S-125-3-□ (-T/O)	PNG-125-□	TN-PN-116-M5	NAPC○S-10-3-K (-T/O)			
NAPN○S-125-10-□ (-T/O)			NAPC○S-10-10-K (-T/O)			
NAPN○S-125-15-□ (-T/O)			NAPC○S-10-15-K (-T/O)			
NAPN○S-130A-3-□ (-T/O)	PNG-130A-□	TN-PN-130-M5	NAPC○S-10-3-K (-T/O)			
NAPN○S-130A-10-□ (-T/O)			NAPC○S-10-10-K (-T/O)			
NAPN○S-130A-15-□ (-T/O)			NAPC○S-10-15-K (-T/O)			
NAPN○S-130B-3-□ (-T/O)	PNG-130B-□		NAPC○S-10-3-K (-T/O)			
NAPN○S-130B-10-□ (-T/O)			NAPC○S-10-10-K (-T/O)			
NAPN○S-130B-15-□ (-T/O)			NAPC○S-10-15-K (-T/O)			
NAPN○S-131-3-□ (-T/O)	PNG-131-□		NAPC○S-10-3-K (-T/O)			
NAPN○S-131-10-□ (-T/O)			NAPC○S-10-10-K (-T/O)			
NAPN○S-131-15-□ (-T/O)			NAPC○S-10-15-K (-T/O)			
NAPN○S-132-3-□ (-T/O)	PNG-132-□	Attach the cup directly to the fitting	NAPF○S-10A-3-K (-T/O)			
NAPN○S-132-10-□ (-T/O)			NAPF○S-10A-10-K (-T/O)			
NAPN○S-132-15-□ (-T/O)			NAPF○S-10A-15-K (-T/O)			
NAPN○S-133-3-□ (-T/O)	PNG-133-□	TN-PN-130-M5	NAPC○S-10-3-K (-T/O)			
NAPN○S-133-10-□ (-T/O)			NAPC○S-10-10-K (-T/O)			
NAPN○S-133-15-□ (-T/O)			NAPC○S-10-15-K (-T/O)			
NAPN○S-134-3-□ (-T/O)	PNG-134-□		NAPC○S-10-3-K (-T/O)			
NAPN○S-134-10-□ (-T/O)			NAPC○S-10-10-K (-T/O)			
NAPN○S-134-15-□ (-T/O)			NAPC○S-10-15-K (-T/O)			

※□ in the table indicates the cup material.
※○ in the table indicates the vacuum port (T or Y).

NAPNTS•YS Cup with Spring Fitting

Dimensions

(mm)

NAPNT/YS-101

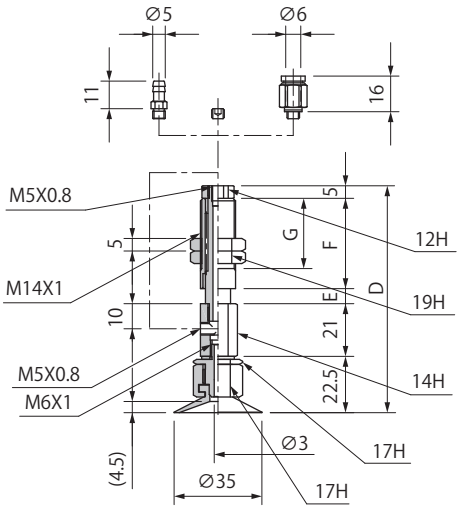

Model number	D	E	F	G	Weight(g)
NAPNT/YS-101-6-□ (-T/O)	90.5	6	36	28	87.5
NAPNT/YS-101-15-□ (-T/O)	99.5	15			92.5
NAPNT/YS-101-30-□ (-T/O)	136.5	30	58	50	117.5

※□ in the table indicates the cup material.
※ The weight value is when NBR (Nitrile rubber) / without connector selected.

NAPNT/YS-102

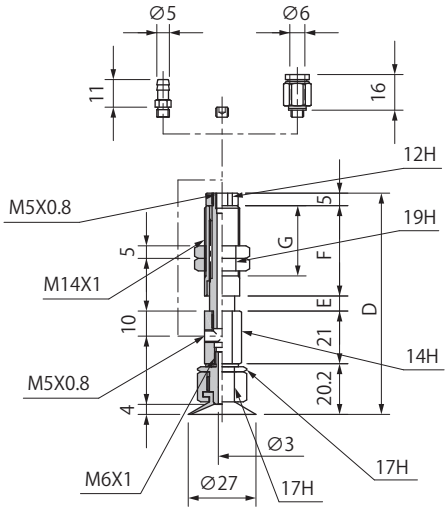

Model number	D	E	F	G	Weight(g)
NAPNT/YS-102-6-□ (-T/O)	88.2	6	36	28	86.5
NAPNT/YS-102-15-□ (-T/O)	97.2	15			91.5
NAPNT/YS-102-30-□ (-T/O)	134.2	30	58	50	116.5

※□ in the table indicates the cup material.
※ The weight value is when NR (Natural rubber) / without connector selected.

NAPNT/YS-103

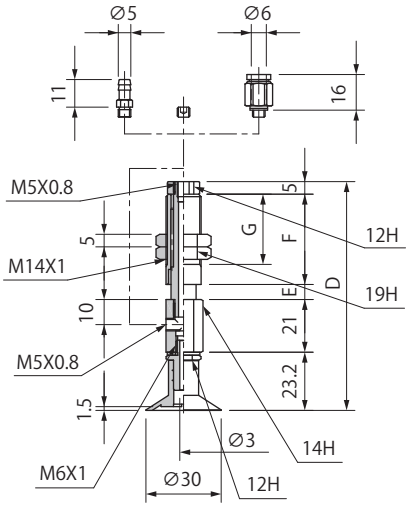

Model number	D	E	F	G	Weight(g)
NAPNT/YS-103-6-□ (-T/O)	91.2	6	36	28	70.5
NAPNT/YS-103-15-□ (-T/O)	100.2	15			75.5
NAPNT/YS-103-30-□ (-T/O)	137.2	30	58	50	100.5

※□ in the table indicates the cup material.
※ The weight value is when NR (Natural rubber) / without connector selected.

NAPNT/YS-104

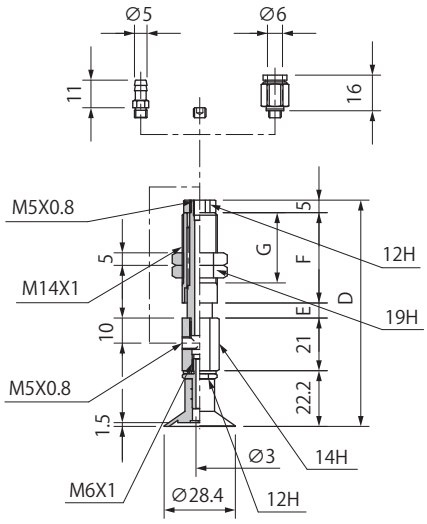

Model number	D	E	F	G	Weight(g)
NAPNT/YS-104-6-□ (-T/O)	90.2	6	36	28	68
NAPNT/YS-104-15-□ (-T/O)	99.2	15			73
NAPNT/YS-104-30-□ (-T/O)	136.2	30	58	50	98

※□ in the table indicates the cup material.
※ The weight value is when NR (Natural rubber) / without connector selected.

Common Specifications

Connector Weight(g)

Symbol	Tube O.D ϕ 6
T	1.5
O	4.0

Dimensions

(mm)

NAPNT/YS-106

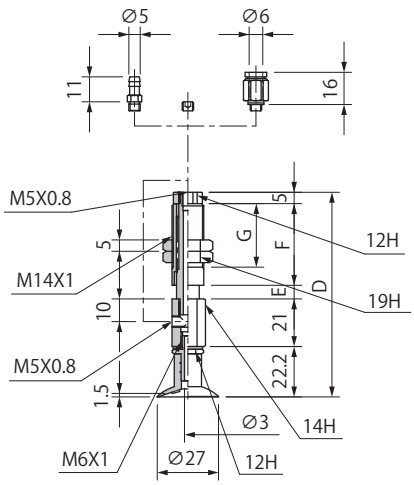

Model number	D	E	F	G	Weight(g)
NAPNT/YS-106-6-□ (-T/O)	90.2	6	36	28	68
NAPNT/YS-106-15-□ (-T/O)	99.2	15			73
NAPNT/YS-106-30-□ (-T/O)	136.2	30	58	50	98

※□ in the table indicates the cup material.
※ The weight value is when NR（Natural rubber）/ without connector selected.

NAPNT/YS-107

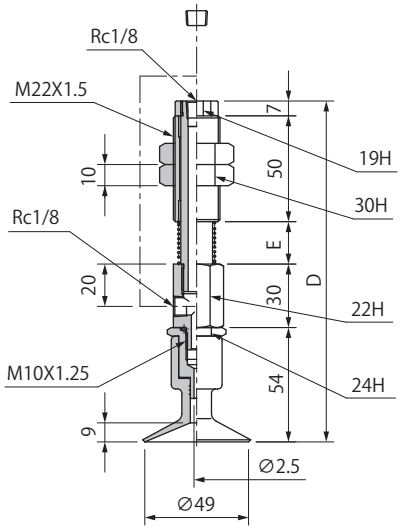

Model number	D	E	Weight(g)
NAPNT/YS-107-10-□ (-T/O)	161	20	310
NAPNT/YS-107-30-□ (-T/O)	191	50	344
NAPNT/YS-107-50-□ (-T/O)	216	75	371

※□ in the table indicates the cup material.
※ The weight value is when NR（Natural rubber）selected.

NAPNT/YS-108

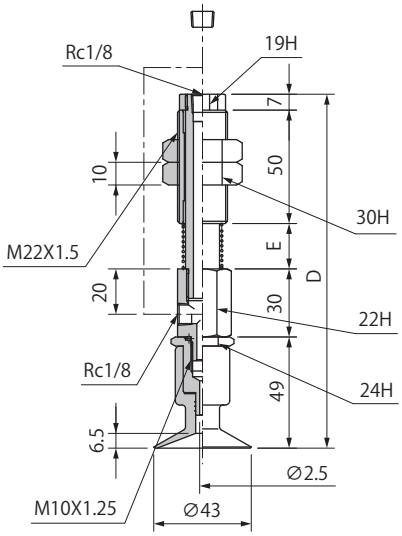

Model number	D	E	Weight (g)
NAPNT/YS-108-10-□	156	20	310
NAPNT/YS-108-30-□	186	50	344
NAPNT/YS-108-50-□	211	75	371

※□ in the table indicates the cup material.
※ The weight value is when NR（Natural rubber）selected.

NAPNT/YS-109

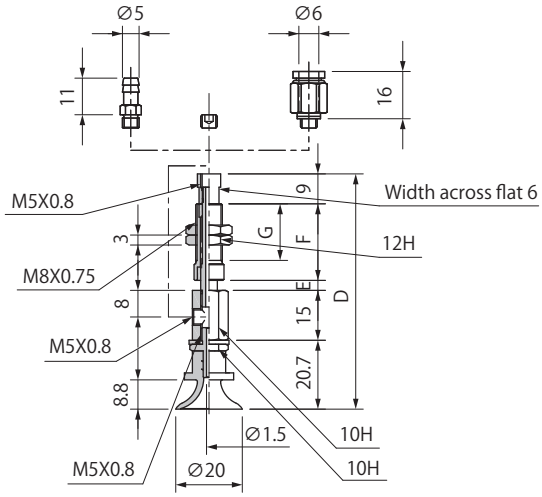

Model number	D	E	F	G	Weight(g)
NAPNT/YS-109-3-□ (-T/O)	70.7	3	23	17	21.5
NAPNT/YS-109-10-□ (-T/O)	77.7	10			22
NAPNT/YS-109-15-□ (-T/O)	90.2	15	30.5	24.5	24.5

※□ in the table indicates the cup material.
※ The weight value is when NR（Natural rubber）selected.

Common Specifications

Connector Weight(g)

Symbol	Tube O.D ϕ 6
T	1.5
O	4.0

NAPNTS•YS Cup with Spring Fitting

Dimensions

(mm)

NAPNT/YS-110

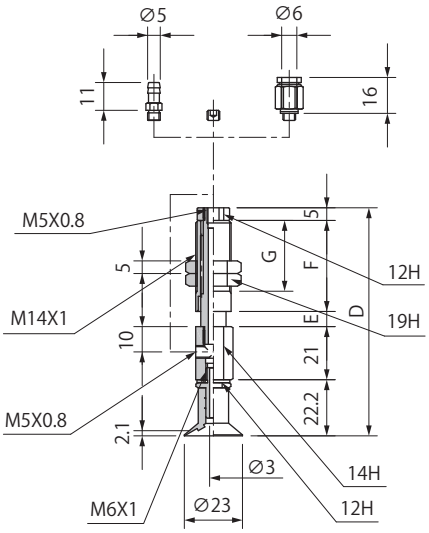

Model number	D	E	F	G	Weight(g)
NAPNT/YS-110-6-□ (-T/O)	90.2	6	36	28	68
NAPNT/YS-110-15-□ (-T/O)	99.2	15			73
NAPNT/YS-110-30-□ (-T/O)	136.2	30	58	50	98

※□ in the table indicates the cup material.
※ The weight value is when NR (Natural rubber) / without connector selected.

NAPNT/YS-111

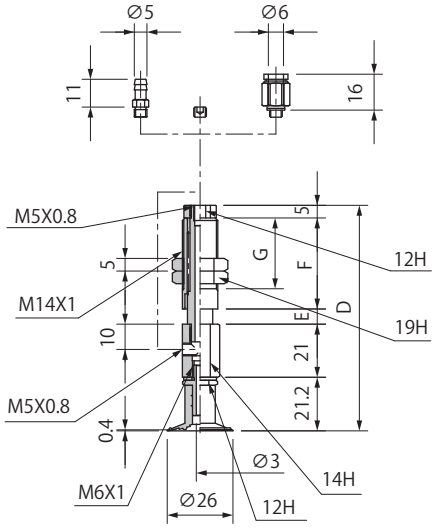

Model number	D	E	F	G	Weight(g)
NAPNT/YS-111-6-□ (-T/O)	89.2	6	36	28	68
NAPNT/YS-111-15-□ (-T/O)	98.2	15			73
NAPNT/YS-111-30-□ (-T/O)	135.2	30	58	50	98

※□ in the table indicates the cup material.
※ The weight value is when NR (Natural rubber) / without connector selected.

NAPNT/YS-112

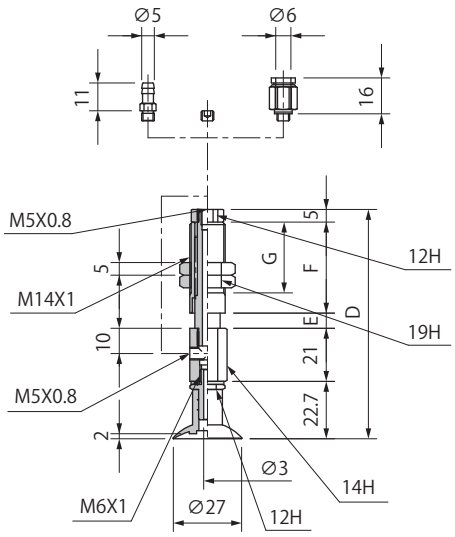

Model number	D	E	F	G	Weight(g)
NAPNT/YS-112-6-□ (-T/O)	90.7	6	36	28	68.5
NAPNT/YS-112-15-□ (-T/O)	99.7	15			73.5
NAPNT/YS-112-30-□ (-T/O)	136.7	30	58	50	98.5

※□ in the table indicates the cup material.
※ The weight value is when NR (Natural rubber) / without connector selected.

NAPNT/YS-114

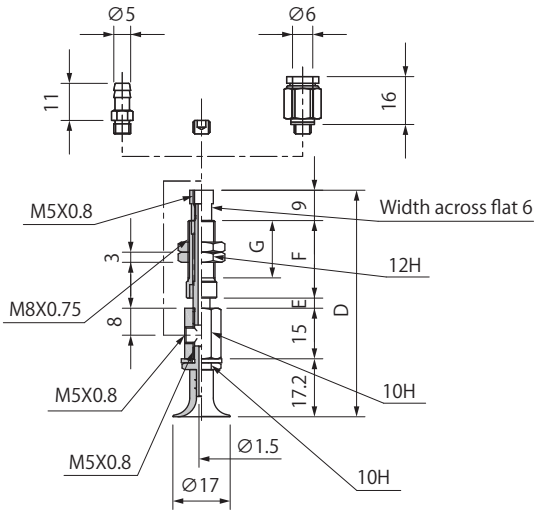

Model number	D	E	F	G	Weight(g)
NAPNT/YS-114-6-□ (-T/O)	67.2	3	23	17	20.5
NAPNT/YS-114-15-□ (-T/O)	74.2	10			21
NAPNT/YS-114-30-□ (-T/O)	86.7	15	30.5	24.5	23.5

※□ in the table indicates the cup material.
※ The weight value is when NR (Natural rubber) / without connector selected.

Common Specifications

Connector Weight(g)

Symbol	Tube O.D ϕ 6
T	1.5
O	4.0

Dimensions

(mm)

NAPNT/YS-116

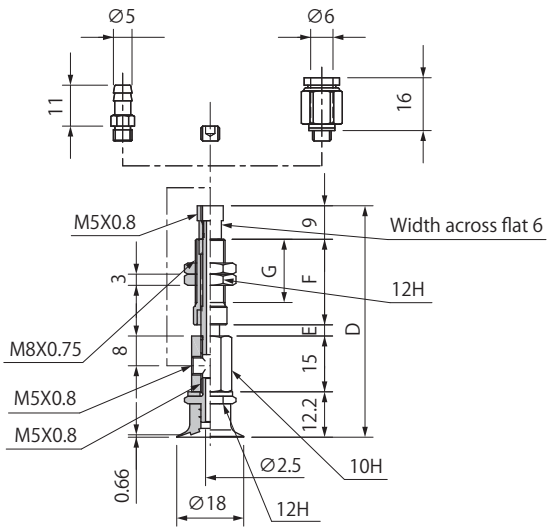

Model number	D	E	F	G	Weight(g)
NAPNT/YS-116-3-□ (-T/O)	62.2	3	23	17	21.5
NAPNT/YS-116-10-□ (-T/O)	69.2	10			22
NAPNT/YS-116-15-□ (-T/O)	81.7	15	30.5	24.5	24.5

※□ in the table indicates the cup material.
※ The weight value is when S (Silicone rubber) / without connector selected.

NAPNT/YS-117

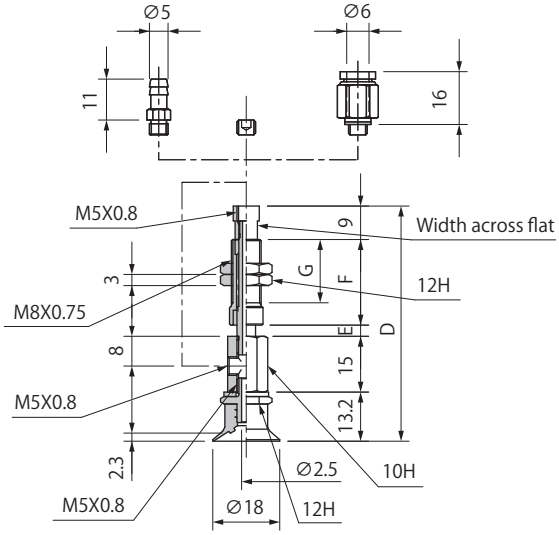

Model number	D	E	F	G	Weight(g)
NAPNT/YS-117-3-□ (-T/O)	63.2	3	23	17	21.5
NAPNT/YS-117-10-□ (-T/O)	70.2	10			22
NAPNT/YS-117-15-□ (-T/O)	82.7	15	30.5	24.5	24.5

※□ in the table indicates the cup material.
※ The weight value is when S (Silicone rubber) / without connector selected.

NAPNT/YS-121

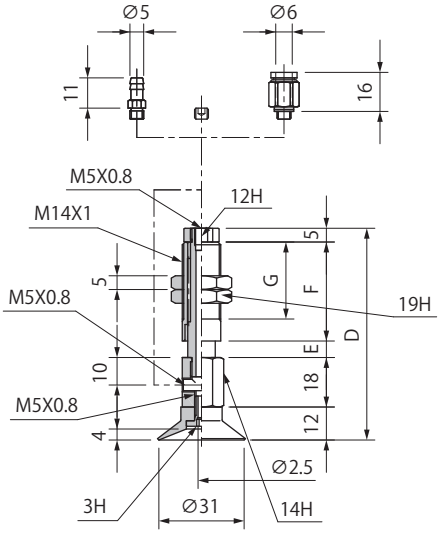

Model number	D	E	F	G	Weight(g)
NAPNT/YS-121-6-□ (-T/O)	77	6	36	28	65.5
NAPNT/YS-121-15-□ (-T/O)	86	15			70.5
NAPNT/YS-121-30-□ (-T/O)	123	30	58	50	95.5

※□ in the table indicates the cup material.
※ The weight value is when S (Silicone rubber) / without connector selected.

NAPNT/YS-122

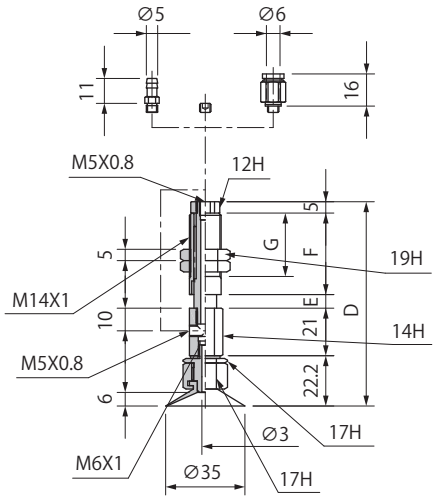

Model number	D	E	F	G	Weight(g)
NAPNT/YS-122-6-□ (-T/O)	90.2	6	36	28	88
NAPNT/YS-122-15-□ (-T/O)	99.2	15			93
NAPNT/YS-122-30-□ (-T/O)	136.2	30	58	50	118

※□ in the table indicates the cup material.
※ The weight value is when NBR (Nitrile rubber) / without connector selected.

Common Specifications

Connector Weight(g)

Symbol	Tube O.D ϕ 6
T	1.5
O	4.0

NAPNTS•YS Cup with Spring Fitting

Dimensions

(mm)

NAPNT/YS-123

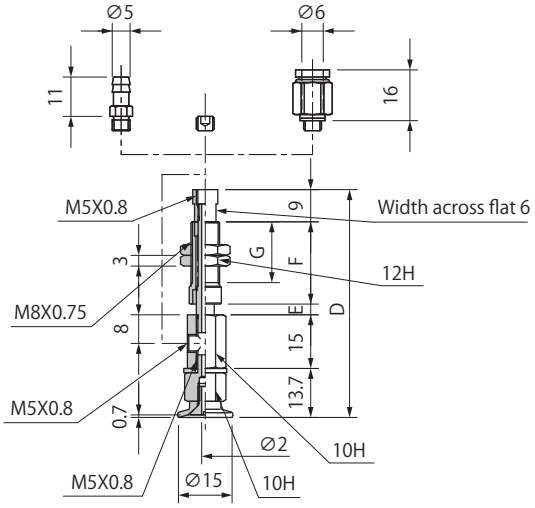

Model number	D	E	F	G	Weight(g)
NAPNT/YS-123-3-□ (-T/O)	63.7	3	23	17	24.5
NAPNT/YS-123-10-□ (-T/O)	70.7	10			25
NAPNT/YS-123-15-□ (-T/O)	83.2	15	30.5	24.5	27.5

※□ in the table indicates the cup material.
※ The weight value is when NR (Natural rubber) / without connector selected.

NAPNT/YS-125

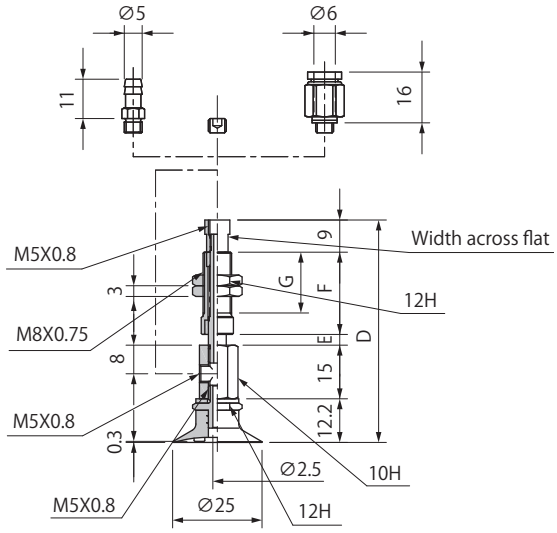

Model number	D	E	F	G	Weight(g)
NAPNT/YS-125-3-□ (-T/O)	62.2	3	23	17	22
NAPNT/YS-125-10-□ (-T/O)	69.2	10			22.5
NAPNT/YS-125-15-□ (-T/O)	81.7	15	30.5	24.5	25

※□ in the table indicates the cup material.
※ The weight value is when U (Urethane rubber)/ without connector selected.

NAPNT/YS-130A

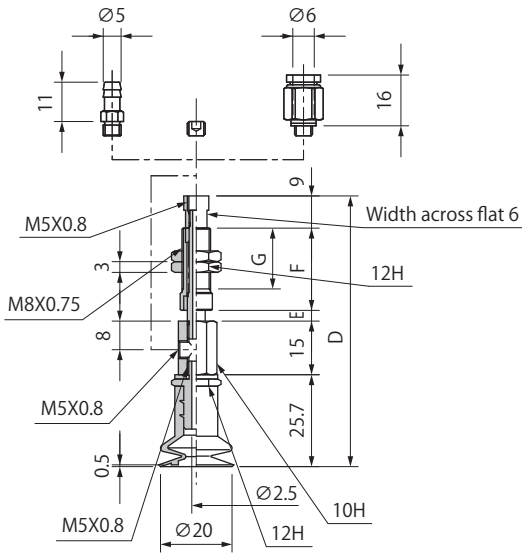

Model number	D	E	F	G	Weight(g)
NAPNT/YS-130A-3-□ (-T/O)	75.7	3	23	17	25.5
NAPNT/YS-130A-10-□ (-T/O)	82.7	10			26
NAPNT/YS-130A-15-□ (-T/O)	95.2	15	30.5	24.5	28.5

※□ in the table indicates the cup material.
※ The weight value is when NBR (Nitrile rubber) / without connector selected.

NAPNT/YS-130B

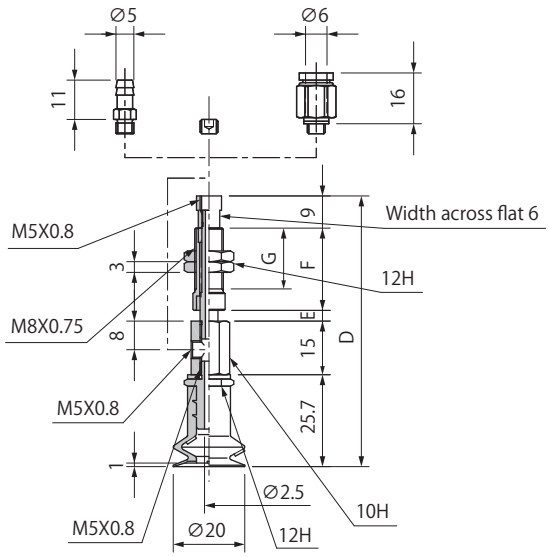

Model number	D	E	F	G	Weight(g)
NAPNT/YS-130B-3-□ (-T/O)	75.7	3	23	17	25.5
NAPNT/YS-130B-10-□ (-T/O)	82.7	10			26
NAPNT/YS-130B-15-□ (-T/O)	95.2	15	30.5	24.5	28.5

※□ in the table indicates the cup material.
※ The weight value is when NBR (Nitrile rubber) / without connector selected.

Common Specifications

Connector Weight(g)

Model Number	Tube O.D ϕ 6
T	1.5
O	4.0

Dimensions

(mm)

NAPNT/YS-131

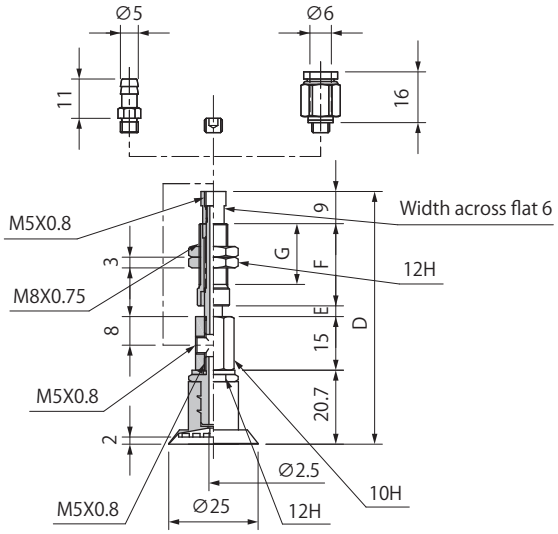

Model number	D	E	F	G	Weight(g)
NAPNT/YS-131-3-□ (-T/O)	70.7	3	23	17	25.5
NAPNT/YS-131-10-□ (-T/O)	77.7	10			26
NAPNT/YS-131-15-□ (-T/O)	90.2	15	30.5	24.5	28.5

※□ in the table indicates the cup material.
※ The weight value is when NBR（Nitrile rubber）/ without connector selected.

NAPNT/YS-132

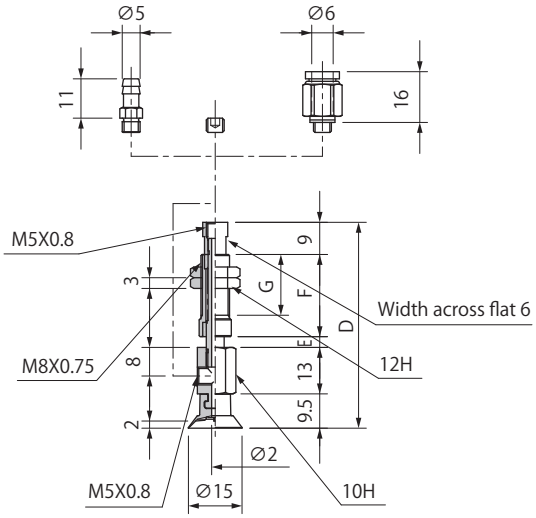

Model number	D	E	F	G	Weight(g)
NAPNT/YS-132-3-□ (-T/O)	57.5	3	23	17	19.1
NAPNT/YS-132-10-□ (-T/O)	64.5	10			19.6
NAPNT/YS-132-15-□ (-T/O)	77	15	30.5	24.5	22.1

※□ in the table indicates the cup material.
※ The weight value is when NBR（Nitrile rubber）/ without connector selected.

NAPNT/YS-133

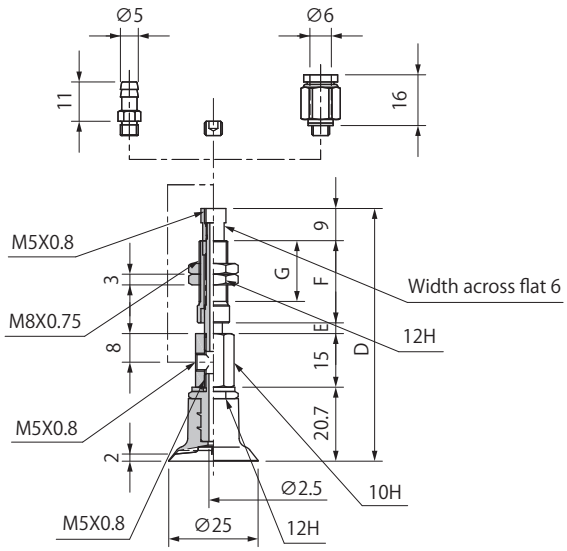

Model number	D	E	F	G	Weight(g)
NAPNT/YS-133-3-□ (-T/O)	70.7	3	23	17	26.6
NAPNT/YS-133-10-□ (-T/O)	77.7	10			27.1
NAPNT/YS-133-15-□ (-T/O)	90.2	15	30.5	24.5	29.6

※□ in the table indicates the cup material.
※ The weight value is when NBR（Nitrile rubber）/ without connector selected.

NAPNT/YS-134

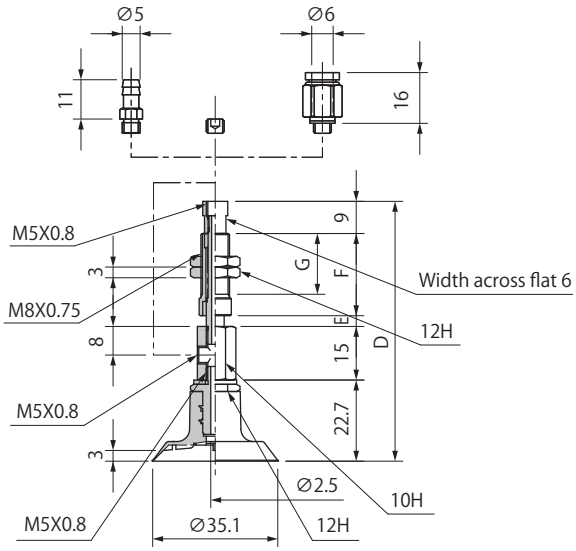

Model number	D	E	F	G	Weight(g)
NAPNT/YS-134-3-□ (-T/O)	72.7	3	23	17	27.5
NAPNT/YS-134-10-□ (-T/O)	79.7	10			28
NAPNT/YS-134-15-□ (-T/O)	92.2	15	30.5	24.5	30.5

※□ in the table indicates the cup material.
※ The weight value is when NBR（Nitrile rubber）/ without connector selected.

Common Specifications

Connector Weight(g)

Model Number	Tube O.D ϕ 6
T	1.5
O	4.0

NAPNTH•YH Cup with Non-rotation Spring Fitting

Consisting of fitting, setting screw, suction cup.

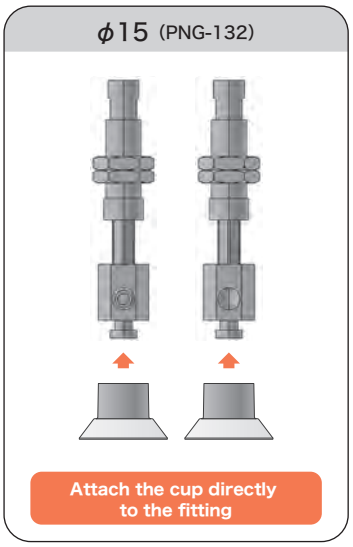

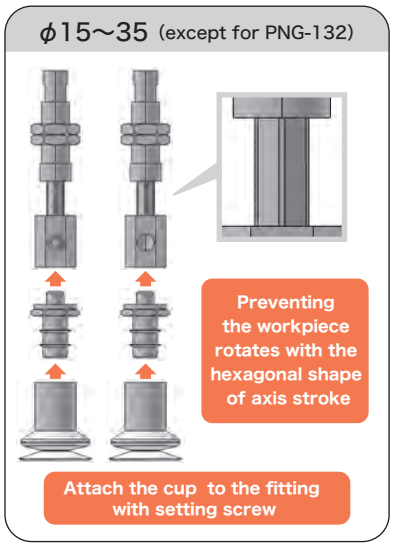

How to Order

NAPN **T** H – **114-3** – **N** – **T**

① ② ③ ④

① Vacuum Port

T	Top
Y	Side

② Cup Size - Stroke (mm)

Symbol	Cup size Stroke	Symbol	Cup size Stroke	Symbol	Cup size Stroke
101-6	ϕ31-6	111-6	ϕ25-6	123-3	ϕ15-3
101-15	ϕ31-15	111-15	ϕ25-15	123-10	ϕ15-10
101-30	ϕ31-30	111-30	ϕ25-30	123-15	ϕ15-15
102-6	ϕ25-6	112-6	ϕ27-6	125-3	ϕ24-3
102-15	ϕ25-15	112-15	ϕ27-15	125-10	ϕ24-10
102-30	ϕ25-30	112-30	ϕ27-30	125-15	ϕ24-15
103-6	ϕ25-6	114-3	ϕ17-3	130A-3	ϕ20-3
103-15	ϕ25-15	114-10	ϕ17-10	130A-10	ϕ20-10
103-30	ϕ25-30	114-15	ϕ17-15	130A-15	ϕ20-15
104-6	ϕ24.8-6	116-3	ϕ18-3	130B-3	ϕ20-3
104-15	ϕ24.8-15	116-10	ϕ18-10	130B-10	ϕ20-10
104-30	ϕ24.8-30	116-15	ϕ18-15	130B-15	ϕ20-15
106-6	ϕ25-6	117-3	ϕ17.6-3	131-3	ϕ25-3
106-15	ϕ25-15	117-10	ϕ17.6-10	131-10	ϕ25-10
106-30	ϕ25-30	117-15	ϕ17.6-15	131-15	ϕ25-15
109-3	ϕ17-3	121-6	ϕ31-6	132-3	ϕ15-3
109-10	ϕ17-10	121-15	ϕ31-15	132-10	ϕ15-10
109-15	ϕ17-15	121-30	ϕ31-30	132-15	ϕ15-15
110-6	ϕ23-6	122-6	ϕ34-6	133-3	ϕ25-3
110-15	ϕ23-15	122-15	ϕ34-15	133-10	ϕ25-10
110-30	ϕ23-30	122-30	ϕ34-30	133-15	ϕ25-15
				134-3	ϕ35-3
				134-10	ϕ35-10
				134-15	ϕ35-15

④ Connector

Blank	N/A
T	Barb
O	Push-in

③ Cup Rubber Material

Symbol	Material	Applicable cup size
N	NBR(Nitrile rubber)	101/116/122/130A/130B/131/132/133/134 Note 1
S	Silicone rubber hardness 55	101/114/116/117/121/130A/130B/131/132/133/134
SI30	Silicone rubber hardness 30	107/123/131/132/133/134
U	Urethane rubber	104/110/116/125/130B
F	Fluorine rubber	130B
NR	Natural rubber	101/102/103/104/106/109/110/111/112/114/123

Note1) The hardness of 131/132/133/134 is 40, and another type is 55.
※Please consult with us for other material.

Spring Specifications

Cup size	Unit	109/114/116/117/123/125/130A/130B/131/132/133/134			101/102/103/104/106/110/111/112/121/122		
Stroke	mm	3	10	15	6	15	30
Spring load at 0 stroke	N	0.61		0.64	2.45		2.9
Spring load at full stroke	N	0.77	1.17		3.43	4.9	5.88

Combination Table

Model number	Cup	Setting screw	Fitting	Piping specifications		
				Without connector・Blank	Barb connector・T	Push-in connector・O
NAPN○H-101-6-□ (-T/O)	PNG-101-□	TN-PN-101-M6	NAPF○H-20B-6-K (-T/O)	M5X0.8 (Female)	ϕ 6 X 4	
NAPN○H-101-15-□ (-T/O)			NAPF○H-20B-15-K (-T/O)			
NAPN○H-101-30-□ (-T/O)			NAPF○H-20B-30-K (-T/O)			
NAPN○H-102-6-□ (-T/O)	PNG-102-□	TN-PN-102-M6	NAPF○H-20B-6-K (-T/O)			
NAPN○H-102-15-□ (-T/O)			NAPF○H-20B-15-K (-T/O)			
NAPN○H-102-30-□ (-T/O)			NAPF○H-20B-30-K (-T/O)			
NAPN○H-103-6-□ (-T/O)	PNG-103-□	TN-PN-103-M6	NAPF○H-20B-6-K (-T/O)			
NAPN○H-103-15-□ (-T/O)			NAPF○H-20B-15-K (-T/O)			
NAPN○H-103-30-□ (-T/O)			NAPF○H-20B-30-K (-T/O)			
NAPN○H-104-6-□ (-T/O)	PNG-104-□	TN-PN-104-M6	NAPF○H-20B-6-K (-T/O)			
NAPN○H-104-15-□ (-T/O)			NAPF○H-20B-15-K (-T/O)			
NAPN○H-104-30-□ (-T/O)			NAPF○H-20B-30-K (-T/O)			
NAPN○H-106-6-□ (-T/O)	PNG-106-□		NAPF○H-20B-6-K (-T/O)			
NAPN○H-106-15-□ (-T/O)			NAPF○H-20B-15-K (-T/O)			
NAPN○H-106-30-□ (-T/O)			NAPF○H-20B-30-K (-T/O)			
NAPN○H-109-3-□ (-T/O)	PNG-109-□	TN-PN-109-M5	NAPC○H-10-3-K (-T/O)			
NAPN○H-109-10-□ (-T/O)			NAPC○H-10-10-K (-T/O)			
NAPN○H-109-15-□ (-T/O)			NAPC○H-10-15-K (-T/O)			
NAPN○H-110-6-□ (-T/O)	PNG-110-□	TN-PN-104-M6	NAPF○H-20B-6-K (-T/O)			
NAPN○H-110-15-□ (-T/O)			NAPF○H-20B-15-K (-T/O)			
NAPN○H-110-30-□ (-T/O)			NAPF○H-20B-30-K (-T/O)			
NAPN○H-111-6-□ (-T/O)	PNG-111-□		NAPF○H-20B-6-K (-T/O)			
NAPN○H-111-15-□ (-T/O)			NAPF○H-20B-15-K (-T/O)			
NAPN○H-111-30-□ (-T/O)			NAPF○H-20B-30-K (-T/O)			
NAPN○H-112-6-□ (-T/O)	PNG-112-□	TN-PN-112-M6	NAPF○H-20B-6-K (-T/O)			
NAPN○H-112-15-□ (-T/O)			NAPF○H-20B-15-K (-T/O)			
NAPN○H-112-30-□ (-T/O)			NAPF○H-20B-30-K (-T/O)			
NAPN○H-114-3-□ (-T/O)	PNG-114-□	TN-PN-114-M5	NAPC○H-10-3-K (-T/O)			
NAPN○H-114-10-□ (-T/O)			NAPC○H-10-10-K (-T/O)			
NAPN○H-114-15-□ (-T/O)			NAPC○H-10-15-K (-T/O)			
NAPN○H-116-3-□ (-T/O)	PNG-116-□	TN-PN-116-M5	NAPC○H-10-3-K (-T/O)			
NAPN○H-116-10-□ (-T/O)			NAPC○H-10-10-K (-T/O)			
NAPN○H-116-15-□ (-T/O)			NAPC○H-10-15-K (-T/O)			
NAPN○H-117-3-□ (-T/O)	PNG-117-□		NAPC○H-10-3-K (-T/O)			
NAPN○H-117-10-□ (-T/O)			NAPC○H-10-10-K (-T/O)			
NAPN○H-117-15-□ (-T/O)			NAPC○H-10-15-K (-T/O)			
NAPN○H-121-6-□ (-T/O)	PNG-121-□	TN-PF-20-M5	NAPB○H-20B-6-K (-T/O)			
NAPN○H-121-15-□ (-T/O)			NAPB○H-20B-15-K (-T/O)			
NAPN○H-121-30-□ (-T/O)			NAPB○H-20B-30-K (-T/O)			
NAPN○H-122-6-□ (-T/O)	PNG-122-□	TN-PN-122-M6	NAPF○H-20B-6-K (-T/O)			
NAPN○H-122-15-□ (-T/O)			NAPF○H-20B-15-K (-T/O)			
NAPN○H-122-30-□ (-T/O)			NAPF○H-20B-30-K (-T/O)			
NAPN○H-123-3-□ (-T/O)	PNG-123-□	TN-PN-123-M5	NAPC○H-10-3-K (-T/O)			
NAPN○H-123-10-□ (-T/O)			NAPC○H-10-10-K (-T/O)			
NAPN○H-123-15-□ (-T/O)			NAPC○H-10-15-K (-T/O)			
NAPN○H-125-3-□ (-T/O)	PNG-125-□	TN-PN-116-M5	NAPC○H-10-3-K (-T/O)			
NAPN○H-125-10-□ (-T/O)			NAPC○H-10-10-K (-T/O)			
NAPN○H-125-15-□ (-T/O)			NAPC○H-10-15-K (-T/O)			
NAPN○H-130A-3-□ (-T/O)	PNG-130A-□	TN-PN-130-M5	NAPC○H-10-3-K (-T/O)			
NAPN○H-130A-10-□ (-T/O)			NAPC○H-10-10-K (-T/O)			
NAPN○H-130A-15-□ (-T/O)			NAPC○H-10-15-K (-T/O)			
NAPN○H-130B-3-□ (-T/O)	PNG-130B-□		NAPC○H-10-3-K (-T/O)			
NAPN○H-130B-10-□ (-T/O)			NAPC○H-10-10-K (-T/O)			
NAPN○H-130B-15-□ (-T/O)			NAPC○H-10-15-K (-T/O)			
NAPN○H-131-3-□ (-T/O)	PNG-131-□		NAPC○H-10-3-K (-T/O)			
NAPN○H-131-10-□ (-T/O)			NAPC○H-10-10-K (-T/O)			
NAPN○H-131-15-□ (-T/O)			NAPC○H-10-15-K (-T/O)			
NAPN○H-132-3-□ (-T/O)	PNG-132-□	Attach the cup directly to the fitting	NAPF○H-5A-3-K (-T/O)			
NAPN○H-132-10-□ (-T/O)			NAPF○H-5A-10-K (-T/O)			
NAPN○H-132-15-□ (-T/O)			NAPF○H-5A-15-K (-T/O)			
NAPN○H-133-3-□ (-T/O)	PNG-133-□	TN-PN-130-M5	NAPC○H-10-3-K (-T/O)			
NAPN○H-133-10-□ (-T/O)			NAPC○H-10-10-K (-T/O)			
NAPN○H-133-15-□ (-T/O)			NAPC○H-10-15-K (-T/O)			
NAPN○H-134-3-□ (-T/O)	PNG-134-□		NAPC○H-10-3-K (-T/O)			
NAPN○H-134-10-□ (-T/O)			NAPC○H-10-10-K (-T/O)			
NAPN○H-134-15-□ (-T/O)			NAPC○H-10-15-K (-T/O)			

※□ in the table indicates the cup material.
※○ in the table indicates the vacuum port (T or Y).

NAPNTH•YH Cup with Non-rotation Spring Fitting

Dimensions

(mm)

NAPNT/YH-101

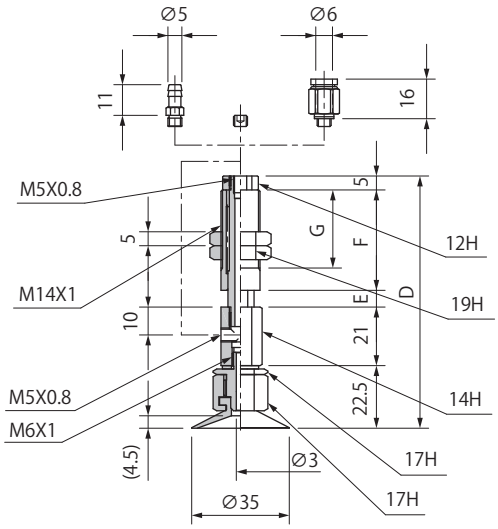

Model number	D	E	F	G	Weight(g)
NAPNT/YH-101-6-□ (-T/O)	90.5	6	36	28	86
NAPNT/YH-101-15-□ (-T/O)	99.5	15			91
NAPNT/YH-101-30-□ (-T/O)	136.5	30	58	50	115

※□ in the table indicates the cup material.
※ The weight value is when NBR (Nitrile rubber) / without connector selected.

NAPNT/YH-102

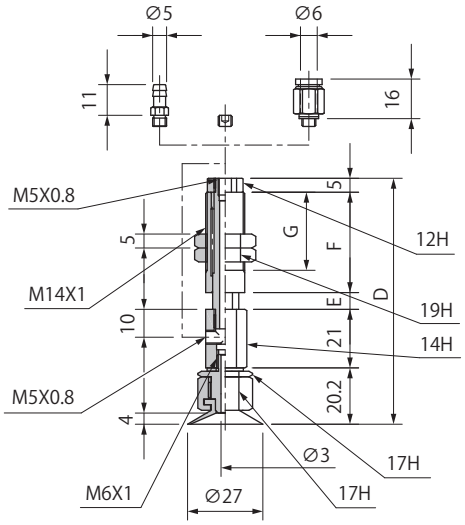

Model number	D	E	F	G	Weight(g)
NAPNT/YH-102-6-□ (-T/O)	88.2	6	36	28	85
NAPNT/YH-102-15-□ (-T/O)	97.2	15			90
NAPNT/YH-102-30-□ (-T/O)	134.2	30	58	50	114

※□ in the table indicates the cup material.
※ The weight value is when NR (Natural rubber) / without connector selected.

NAPNT/YH-103

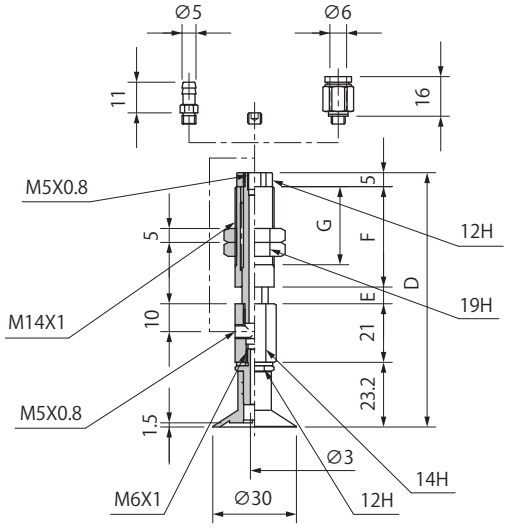

Model number	D	E	F	G	Weight(g)
NAPNT/YH-103-6-□ (-T/O)	91.2	6	36	28	69
NAPNT/YH-103-15-□ (-T/O)	100.2	15			74
NAPNT/YH-103-30-□ (-T/O)	137.2	30	58	50	98

※□ in the table indicates the cup material.
※ The weight value is when NR (Natural rubber) / without connector selected.

NAPNT/YH-104

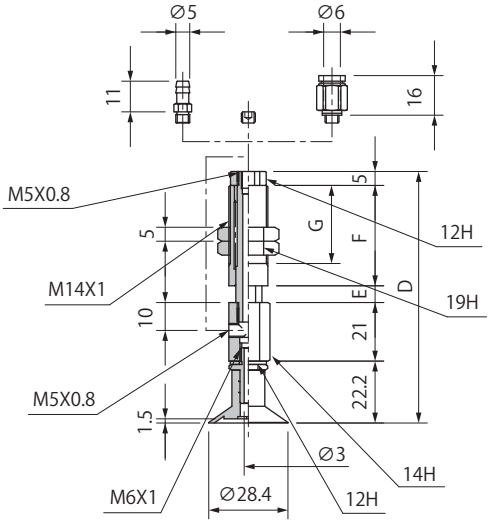

Model number	D	E	F	G	Weight(g)
NAPNT/YH-104-6-□ (-T/O)	90.2	6	36	28	66.5
NAPNT/YH-104-15-□ (-T/O)	99.2	15			71.5
NAPNT/YH-104-30-□ (-T/O)	136.2	30	58	50	95.5

※□ in the table indicates the cup material.
※ The weight value is when NR (Natural rubber) / without connector selected.

Common Specifications

Connector Weight(g)

Symbol	Tube O.D ϕ 6
T	1.5
O	4.0

Dimensions

(mm)

NAPNT/YH-106

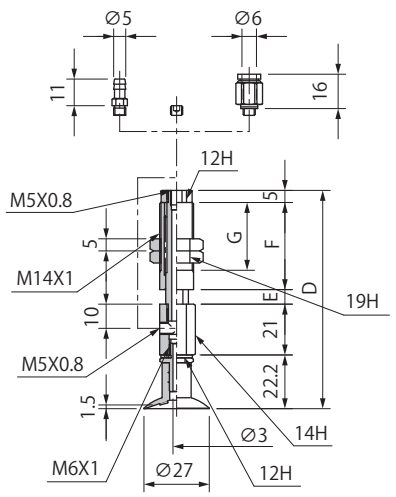

Model number	D	E	F	G	Weight(g)
NAPNT/YH-106-6-□ (-T/O)	90.2	6	36	28	66.5
NAPNT/YH-106-15-□ (-T/O)	99.2	15			71.5
NAPNT/YH-106-30-□ (-T/O)	136.2	30	58	50	95.5

※□ in the table indicates the cup material.
※ The weight value is when NR（Natural rubber）/ without connector selected.

NAPNT/YH-109

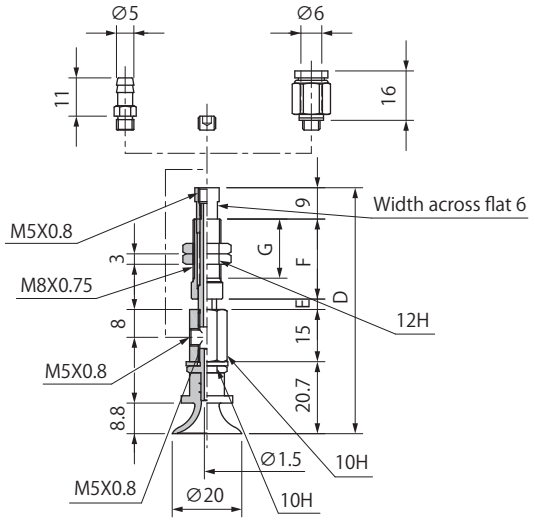

Model number	D	E	F	G	Weight(g)
NAPNT/YH-109-3-□ (-T/O)	70.7	3	23	17	22
NAPNT/YH-109-10-□ (-T/O)	77.7	10			22.5
NAPNT/YH-109-15-□ (-T/O)	90.2	15	30.5	24.5	25.5

※□ in the table indicates the cup material.
※ The weight value is when NR（Natural rubber）/ without connector selected.

NAPNT/YH-110

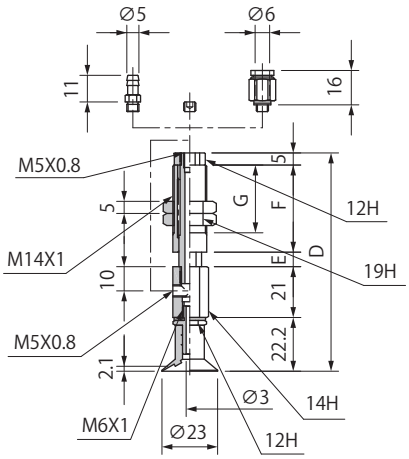

Model number	D	E	F	G	Weight(g)
NAPNT/YH-110-6-□ (-T/O)	90.2	6	36	28	66.5
NAPNT/YH-110-15-□ (-T/O)	99.2	15			71.5
NAPNT/YH-110-30-□ (-T/O)	136.2	30	58	50	95.5

※□ in the table indicates the cup material.
※ The weight value is when NR（Natural rubber）/ without connector selected.

NAPNT/YH-111

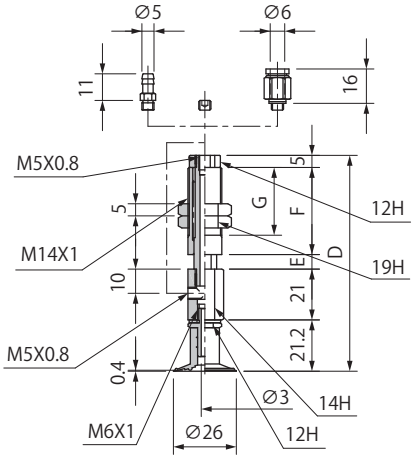

Model number	D	E	F	G	Weight(g)
NAPNT/YH-111-6-□ (-T/O)	89.2	6	36	28	66.5
NAPNT/YH-111-15-□ (-T/O)	98.2	15			71.5
NAPNT/YH-111-30-□ (-T/O)	135.2	30	58	50	95.5

※□ in the table indicates the cup material.
※ The weight value is when NR（Natural rubber）/ without connector selected.

Common Specifications

Connector Weight(g)

Symbol	Tube O.D ϕ 6
T	1.5
O	4.0

NAPNTH•YH Cup with Non-rotation Spring Fitting

Dimensions

(mm)

NAPNT/YH-112

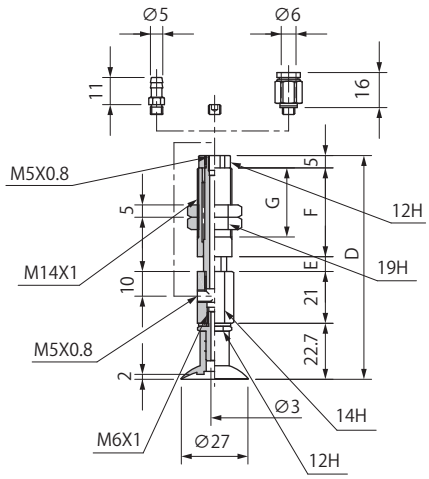

Model number	D	E	F	G	Weight(g)
NAPNT/YH-112-6-□ (-T/O)	90.7	6	36	28	67
NAPNT/YH-112-15-□ (-T/O)	99.7	15			72
NAPNT/YH-112-30-□ (-T/O)	136.7	30	58	50	96

※□ in the table indicates the cup material.
※ The weight value is when NR (Natural rubber) / without connector selected.

NAPNT/YH-114

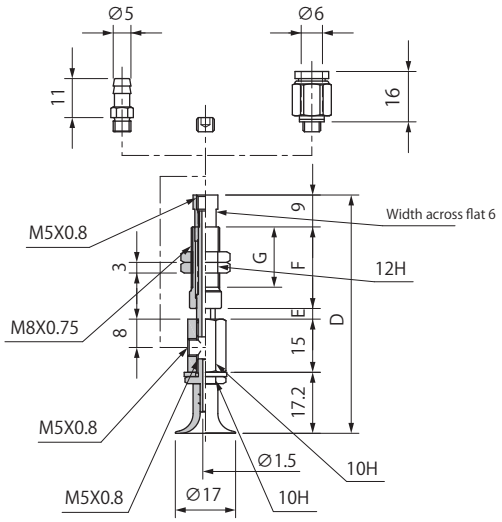

Model number	D	E	F	G	Weight(g)
NAPNT/YH-114-3-□ (-T/O)	67.2	3	23	17	21
NAPNT/YH-114-10-□ (-T/O)	74.2	10			21.5
NAPNT/YH-114-15-□ (-T/O)	86.7	15	30.5	24.5	24.5

※□ in the table indicates the cup material.
※ The weight value is when NR (Natural rubber) / without connector selected.

NAPNT/YH-116

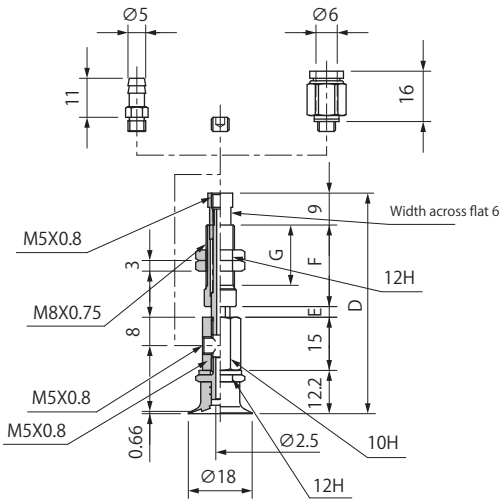

Model number	D	E	F	G	Weight(g)
NAPNT/YH-116-3-□ (-T/O)	62.2	3	23	17	22
NAPNT/YH-116-10-□ (-T/O)	69.2	10			22.5
NAPNT/YH-116-15-□ (-T/O)	81.7	15	30.5	24.5	25.5

※□ in the table indicates the cup material.
※ The weight value is when S (Silicone rubber) / without connector selected.

NAPNT/YH-117

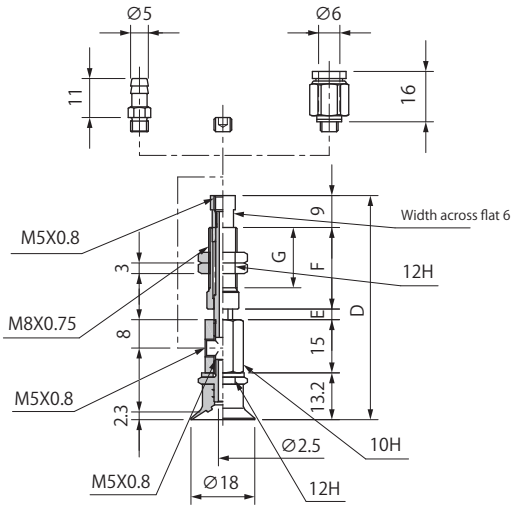

Model number	D	E	F	G	Weight(g)
NAPNT/YH-117-3-□ (-T/O)	63.2	3	23	17	22
NAPNT/YH-117-10-□ (-T/O)	70.2	10			22.5
NAPNT/YH-117-15-□ (-T/O)	82.7	15	30.5	24.5	25.5

※□ in the table indicates the cup material.
※ The weight value is when S (Silicone rubber) / without connector selected.

Common Specifications

Connector Weight(g)

Symbol	Tube O.D ϕ 6
T	1.5
O	4.0

Dimensions

(mm)

NAPNT/YH-121

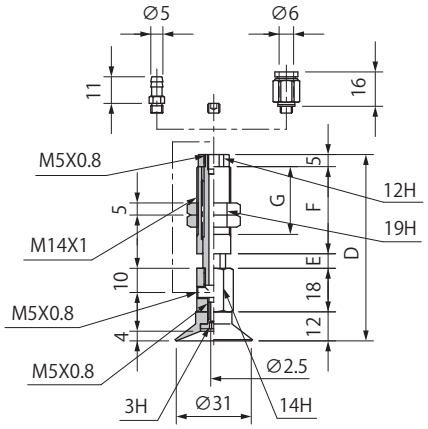

Model number	D	E	F	G	Weight(g)
NAPNT/YH-121-6-□ (-T/O)	77	6	36	28	64
NAPNT/YH-121-15-□ (-T/O)	86	15			69
NAPNT/YH-121-30-□ (-T/O)	123	30	58	50	93

※□ in the table indicates the cup material.
※ The weight value is when S (Silicone rubber) / without connector selected.

NAPNT/YH-122

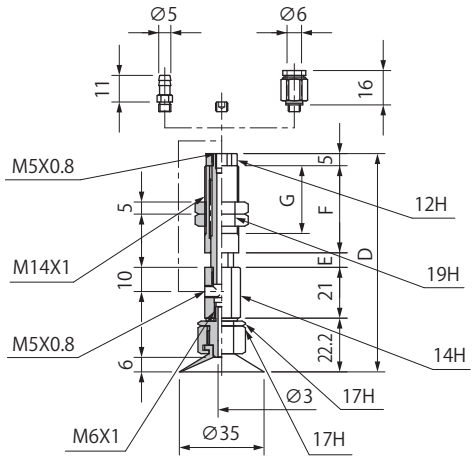

Model number	D	E	F	G	Weight(g)
NAPNT/YH-122-6-□ (-T/O)	90.2	6	36	28	86.5
NAPNT/YH-122-15-□ (-T/O)	99.2	15			91.5
NAPNT/YH-122-30-□ (-T/O)	136.2	30	58	50	115.5

※□ in the table indicates the cup material.
※ The weight value is when NBR (Nitrile rubber) / without connector selected.

NAPNT/YH-123

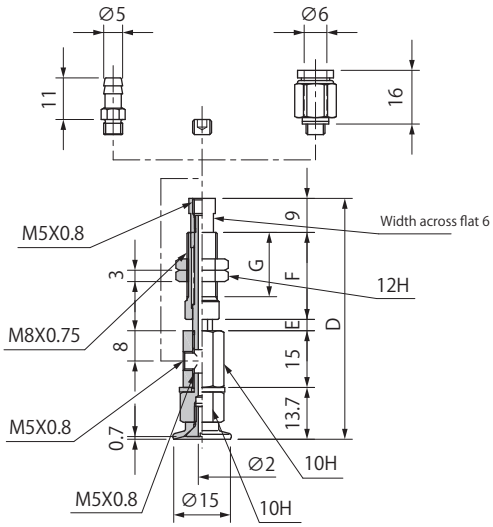

Model number	D	E	F	G	Weight(g)
NAPNT/YH-123-3-□ (-T/O)	63.7	3	23	17	25
NAPNT/YH-123-10-□ (-T/O)	70.7	10			25.5
NAPNT/YH-123-15-□ (-T/O)	83.2	15	30.5	24.5	28.5

※□ in the table indicates the cup material.
※ The weight value is when NR (Natural rubber) / without connector selected.

NAPNT/YH-125

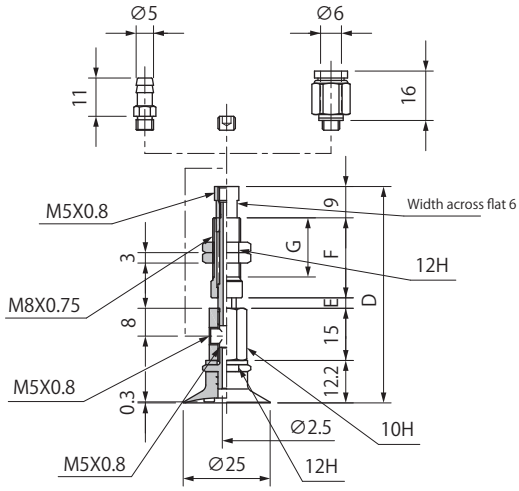

Model number	D	E	F	G	Weight(g)
NAPNT/YH-125-3-□ (-T/O)	62.2	3	23	17	22.5
NAPNT/YH-125-10-□ (-T/O)	69.2	10			23
NAPNT/YH-125-15-□ (-T/O)	81.7	15	30.5	24.5	26

※□ in the table indicates the cup material.
※ The weight value is when U (Urethane rubber)/ without connector selected.

Common Specifications

Connector Weight(g)

Symbol	Tube O.D ϕ 6
T	1.5
O	4.0

NAPNTH•YH Cup with Non-rotation Spring Fitting

Dimensions

(mm)

NAPNT/YH-130A

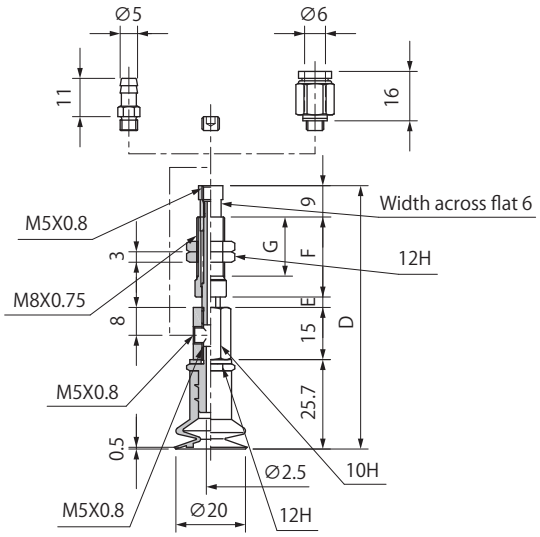

Model number	D	E	F	G	Weight(g)
NAPNT/YH-130A-3-□ (-T/O)	75.7	3	23	17	26
NAPNT/YH-130A-10-□(-T/O)	82.7	10			26.5
NAPNT/YH-130A-15-□(-T/O)	95.5	15	30.5	24.5	29.5

※□ in the table indicates the cup material.
※ The weight value is when NBR (Nitrile rubber) / without connector selected.

NAPNT/YH-130B

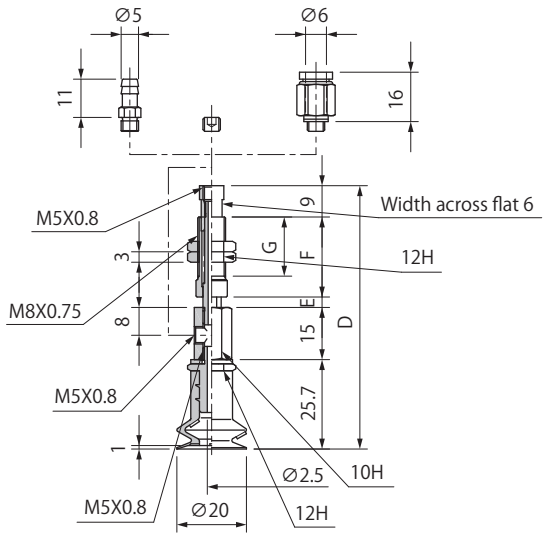

Model number	D	E	F	G	Weight(g)
NAPNT/YH-130B-3-□ (-T/O)	75.7	3	23	17	26
NAPNT/YH-130B-10-□(-T/O)	82.7	10			26.5
NAPNT/YH-130B-15-□(-T/O)	95.2	15	30.5	24.5	29.5

※□ in the table indicates the cup material.
※ The weight value is when NBR (Nitrile rubber) / without connector selected.

NAPNT/YH-131

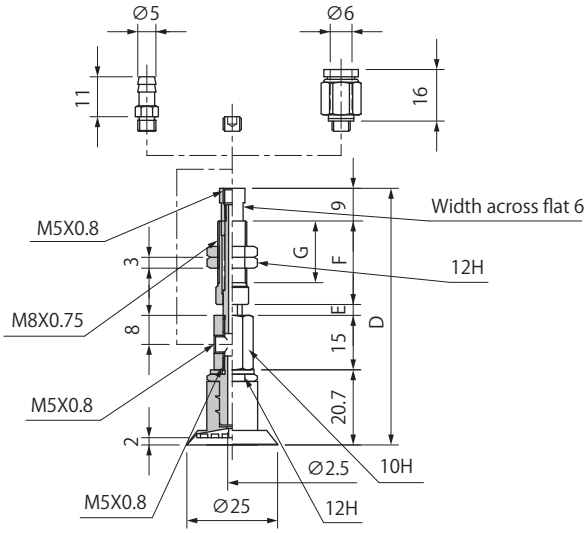

Model number	D	E	F	G	Weight(g)
NAPNT/YH-131-3-□ (-T/O)	70.7	3	23	17	26
NAPNT/YH-131-10-□ (-T/O)	77.7	10			26.5
NAPNT/YH-131-15-□ (-T/O)	90.2	15	30.5	24.5	29.5

※□ in the table indicates the cup material.
※ The weight value is when NBR (Nitrile rubber) / without connector selected.

NAPNT/YH-132

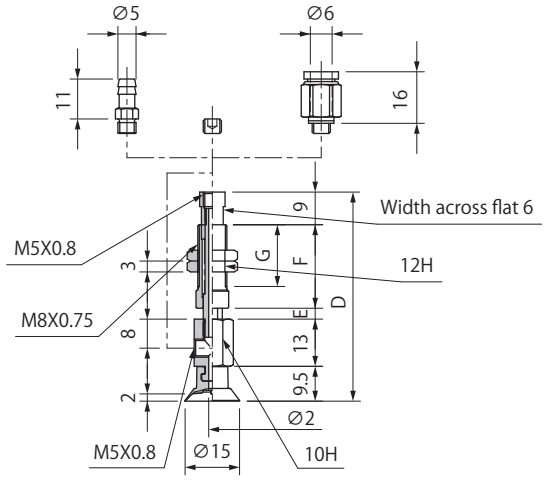

Model number	D	E	F	G	Weight(g)
NAPNT/YH-132-3-□ (-T/O)	57.5	3	23	17	19.1
NAPNT/YH-132-10-□ (-T/O)	64.5	10			19.6
NAPNT/YH-132-15-□ (-T/O)	77	15	30.5	24.5	22.6

※□ in the table indicates the cup material.
※ The weight value is when NBR (Nitrile rubber) / without connector selected.

Common Specifications

Connector Weight(g)

Symbol	Tube O.D ϕ 6
T	1.5
O	4.0

Dimensions

(mm)

NAPNT/YH-133

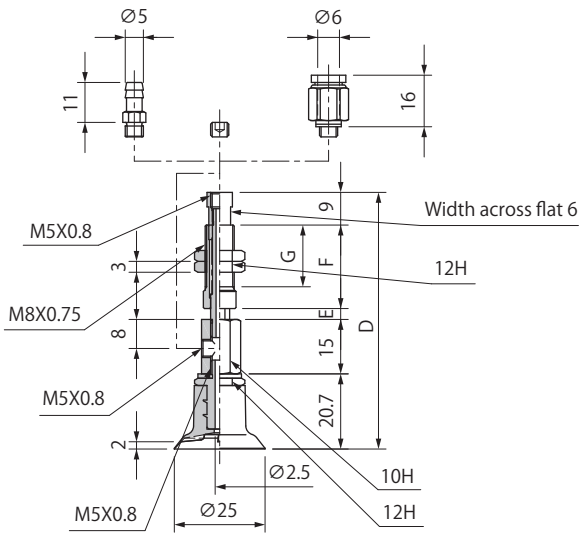

Model number	D	E	F	G	Weight(g)
NAPNT/YH-133-3-□ (-T/O)	70.7	3	23	17	27.1
NAPNT/YH-133-10-□ (-T/O)	77.7	10			27.6
NAPNT/YH-133-15-□ (-T/O)	90.2	15	30.5	24.5	30.6

※□ in the table indicates the cup material.
※ The weight value is when NBR（Nitrile rubber）/ without connector selected.

NAPNT/YH-134

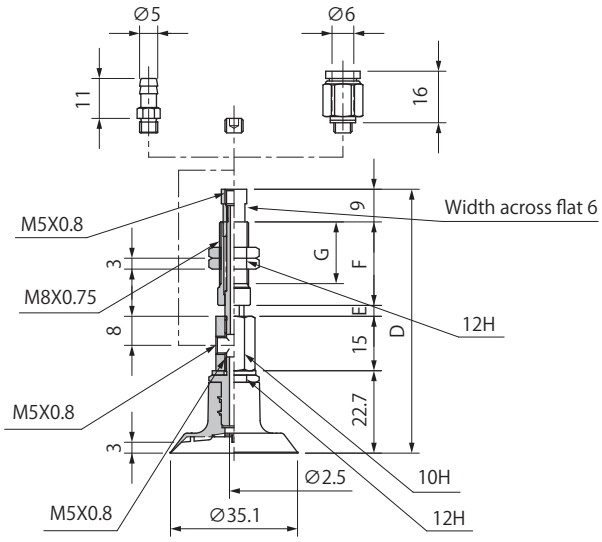

Model number	D	E	F	G	Weight(g)
NAPNT/YH-134-3-□ (-T/O)	72.7	3	23	17	28
NAPNT/YH-134-10-□ (-T/O)	79.7	10			28.5
NAPNT/YH-134-15-□ (-T/O)	92.2	15	30.5	24.5	31.5

※□ in the table indicates the cup material.
※ The weight value is when NBR（Nitrile rubber）/ without connector selected.

Common Specifications

Connector Weight(g)

Symbol	Tube O.D ϕ 6
T	1.5
O	4.0

PN-B Series

Cup for Pouch Film 2 Bellows Type

RoHS

Excellent followability and grip performance.
Suitable for high-speed handling by the robot!

Bags products

Liquid filled bag

Instant liquid soup

Optimal size for pouch film.

φ18 φ25 φ35

Material ·hardness can be selected.

○ FDA-compatible silicone rubber line up

Silicone rubber hardness 30 | Silicone rubber hardness 40 | Nitrile rubber hardness 55

Suction Cup

PNG		Cup size (mm) ϕ18, 25, 35		P.429

Fitting

Type		Applicable cup size (mm)	Stroke (mm)	Vacuum port	Piping・Connector	Page
Cup with fixed fitting PN- □ - M		ϕ18, 25, 35	N/A	Top	Male screw	P.431
Cup with fixed fitting PN- □ - F		ϕ18, 25, 35	N/A	Top	Female screw	P.431

Suction Cup Selection Guide P.163

PNG-B Cup for Pouch Film 2 Bellows Type

How to Order

PNG – 134B – S3

① ②

① Cup Size (mm)

Symbol	Cup size
132B	ϕ18
133B	ϕ25
134B	ϕ35

② Cup Rubber Material

Symbol	Material
N	NBR(Nitrile rubber)
S3	Silicone rubber hardness 30
S4	Silicone rubber hardness 40

※Please consult with us for other material.

Cup Rubber Material Standard Specifications

Symbol	Material	Hardness (A/s)	Ambient temperature (℃)	Color
N	NBR(Nitrile rubber)	55	-26～120	Black
S3	Silicone rubber	30	-60～250	Translucent white
S4	Silicone rubber	40		Light blue

Applicable Rubber Material Table

Material	Color	Symbol	Round type		
			18	25	35
NBR(Nitrile rubber)	Black	N	●	●	●
Silicone rubber hardness 30	Translucent white	S3	●	●	●
Silicone rubber hardness 40	Light blue	S4	●	●	●

●: In stock ○Made to order ×: None
※Please consult with us for other material.

Dimensions

(mm)

PNG-132B

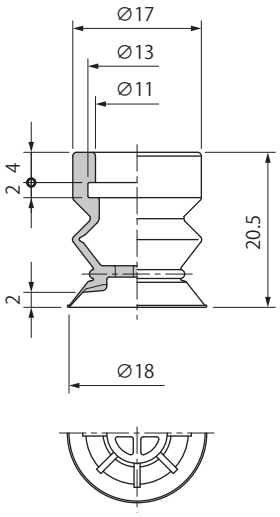

PNG-133B

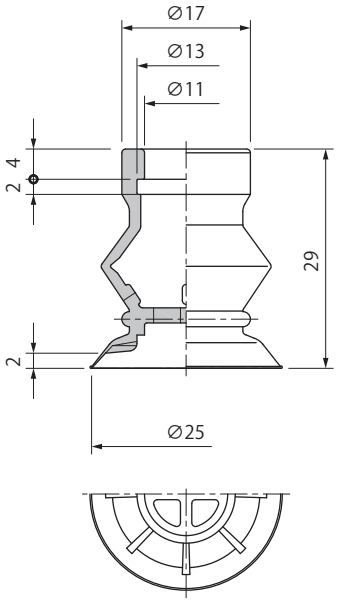

PNG-134B

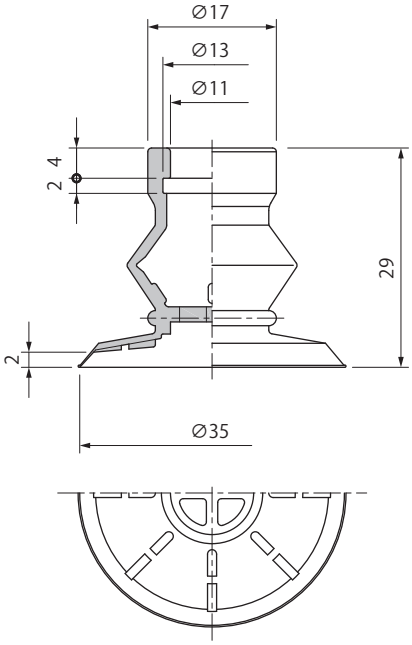

Weight

(g)

Model ＼ Material	N	S3	S4
PNG-132B	2.0	1.7	1.8
PNG-133B	3.4	2.9	3.1
PNG-134B	4.0	3.4	3.4

PN-B Cup with Fixed Fitting

Male Screw

Female Screw

Simple construction of the cup and the screw.

ϕ18, 25, 35mm

Screw and the cup can be disassembled

One touch mounting into setting screw Easily maintenance and replaced

Model number	Cup	Setting screw	Screw size
PN-132B-M5-M- □(-F)	PNG-132B- □	PN-134B-M5-M-K (-F)	M5
PN-132B-M8-M- □(-F)		PN-134B-M8-M-K (-F)	M8
PN-132B-G1-M- □ (-F)		PN-134B-G1-M-K (-F)	G1/8
PN-132B-G2-M- □ (-F)		PN-134B-G2-M-K (-F)	G1/4
PN-133B-M5-M- □(-F)	PNG-133B- □	PN-134B-M5-M-K (-F)	M5
PN-133B-M8-M- □(-F)		PN-134B-M8-M-K (-F)	M8
PN-133B-G1-M- □ (-F)		PN-134B-G1-M-K (-F)	G1/8
PN-133B-G2-M- □ (-F)		PN-134B-G2-M-K (-F)	G1/4
PN-134B-M5-M- □(-F)	PNG-134B- □	PN-134B-M5-M-K (-F)	M5
PN-134B-M8-M- □(-F)		PN-134B-M8-M-K (-F)	M8
PN-134B-G1-M- □ (-F)		PN-134B-G1-M-K (-F)	G1/8
PN-134B-G2-M- □ (-F)		PN-134B-G2-M-K (-F)	G1/4

※□ in the table indicates the cup material.

Model number	Cup	Setting screw	Screw size
PN-132B-G1-F- □ (-F)	PNG-132B- □	PN-134B-G1-F-K (-F)	G1/8
PN-132B-G2-F- □ (-F)		PN-134B-G2-F-K (-F)	G1/4
PN-133B-G1-F- □ (-F)	PNG-133B- □	PN-134B-G1-F-K (-F)	G1/8
PN-133B-G2-F- □ (-F)		PN-134B-G2-F-K (-F)	G1/4
PN-134B-G1-F- □ (-F)	PNG-134B- □	PN-134B-G1-F-K (-F)	G1/8
PN-134B-G2-F- □ (-F)		PN-134B-G2-F-K (-F)	G1/4

※□ in the table indicates the cup material.

How to Order

PN – 134B – G1 – M – S3 – F

① ② ③ ④ ⑤

① Cup Size (mm)

Symbol	Cup size
132B	ϕ18
133B	ϕ25
134B	ϕ35

② Screw Size

Symbol	Size
M5 Note1	M5
M8 Note1	M8
G1	G1/8
G2	G1/4

Note1) Male screw only (M in ③).

③ Screw Type

Symbol	Type
M	Male screw
F	Female screw

⑤ Filter

F	With
Blank	N/A

④ Cup Rubber Material

Symbol	Material
N	NBR(Nitrile rubber)
S3	Silicone rubber hardness 30
S4	Silicone rubber hardness 40

※ Please consult with us for other material.

Screw Specifications

Cup Size	ϕ18	ϕ25	ϕ35
Male screw	M5, M8, G1/8, G1/4		
Female screw	G1/8, G1/4		
Material	Aluminum		
Filter	SUS (MESH60) Note1		
Packing	NBR		

Note1) When selecting with filter.

Dimensions

(mm)

PN-132B/133B/134B-M5-M

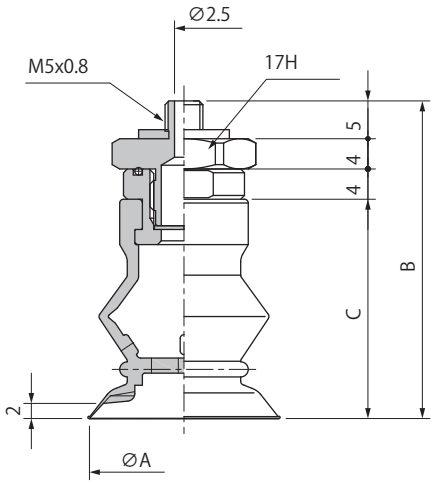

Model number	A	B	C	Weight (g)
PN-132B-M5-M- □ -(F)	18	33.5	20.5	8.4
PN-133B-M5-M- □ -(F)	25	42	29	9.8
PN-134B-M5-M- □ -(F)	35			10.4

※□ in the table indicates the cup material.
※The weight value is when NBR（Nitrile rubber）selected.

PN-132B/133B/134B-M8-M

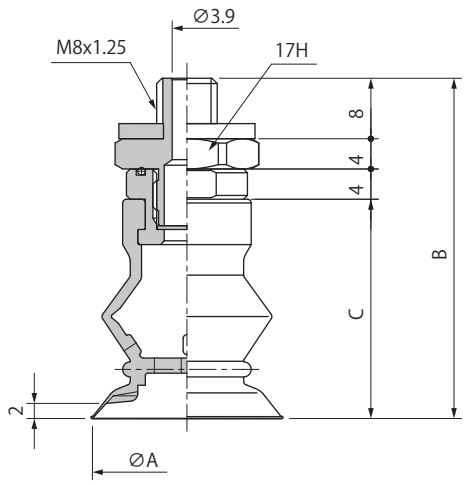

Model number	A	B	C	Weight (g)
PN-132B-M8-M- □ -(F)	18	36.5	20.5	10.4
PN-133B-M8-M- □ -(F)	25	45	29	11.8
PN-134B-M8-M- □ -(F)	35			12.4

※□ in the table indicates the cup material.
※The weight value is when NBR（Nitrile rubber）selected.

PN-132B/133B/134B-G1-M

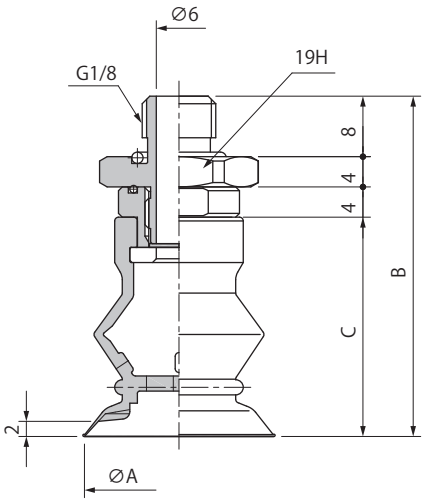

Model number	A	B	C	Weight (g)
PN-132B-G1-M- □ -(F)	18	36.5	20.5	8.7
PN-133B-G1-M- □ -(F)	25	45	29	10.1
PN-134B-G1-M- □ -(F)	35			10.7

※□ in the table indicates the cup material.
※The weight value is when NBR（Nitrile rubber）selected.

PN-132B/133B/134B-G2-M

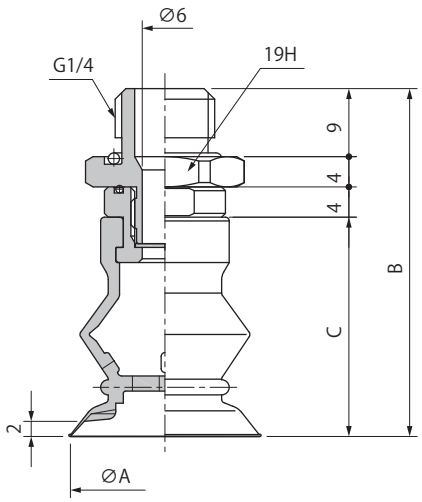

Model number	A	B	C	Weight (g)
PN-132B-G2-M- □ -(F)	18	37.5	20.5	9.3
PN-133B-G2-M- □ -(F)	25	46	29	10.7
PN-134B-G2-M- □ -(F)	35			11.3

※□ in the table indicates the cup material.
※The weight value is when NBR（Nitrile rubber）selected.

PN-B Cup with Fixed Fitting

Dimensions

(mm)

PN-132B/133B/134B-G1-F

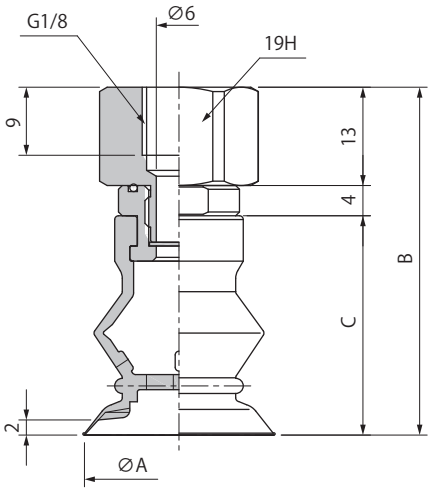

Model number	A	B	C	Weight (g)
PN-132B-G1-F- □ -(F)	18	37.5	20.5	14.0
PN-133B-G1-F- □ -(F)	25	46	29	15.4
PN-134B-G1-F- □ -(F)	35			16.0

※□ in the table indicates the cup material.
※The weight value is when NBR（Nitrile rubber）selected.

PN-132B/133B/134B-G2-F

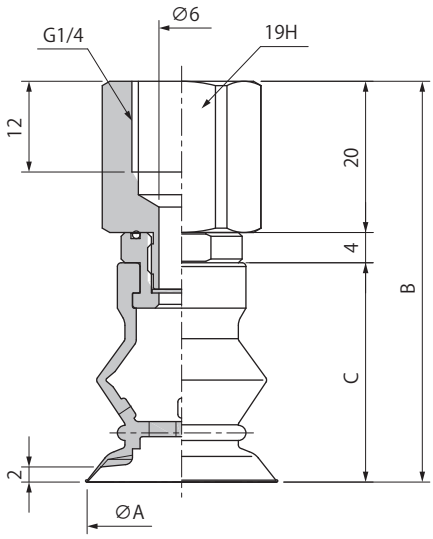

Model number	A	B	C	Weight (g)
PN-132B-G2-F- □ -(F)	18	44.5	20.5	16.6
PN-133B-G2-F- □ -(F)	25	53	29	18.0
PN-134B-G2-F- □ -(F)	35			18.6

※□ in the table indicates the cup material.
※The weight value is when NBR（Nitrile rubber）selected.

02
Suction Cup
PA
PB
PC
PCD
PD
PF
PFO
PH
PJ
CORE
PK2
PK2B
PK2L
PL
PN
PN-B
PP
PQ
PR
PU
PW
RA
SM
TN

PP Series

Cube Cup

RoHS

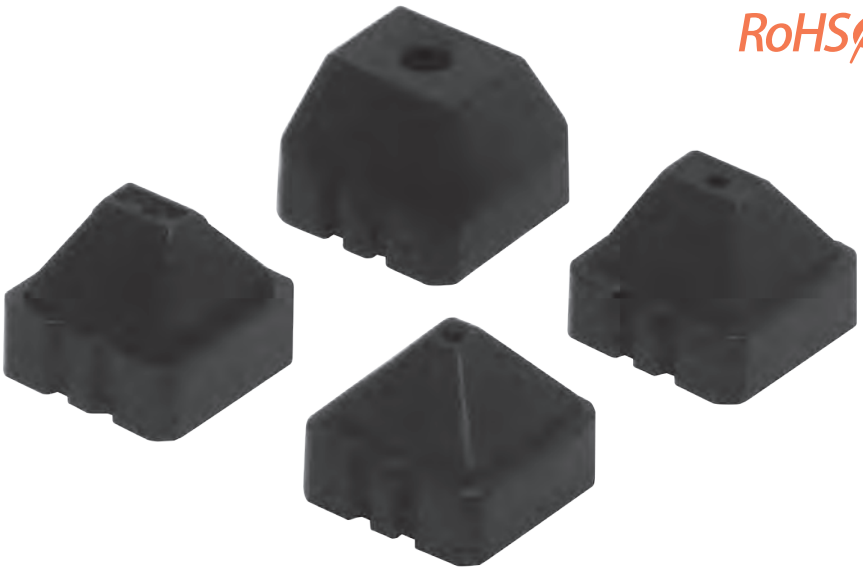

Super-small suction cups shaped square ,
For small workpieces such as semiconductor chips!

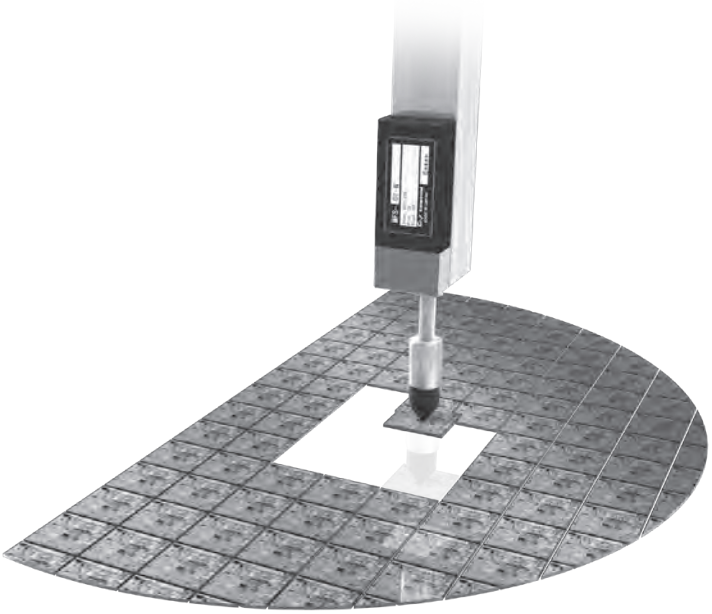

Wide range of cup sizes.

0.55×0.55	0.5×1.3	0.8×1.6	1.3×2.8	2.0×2.8

02 Suction Cup
PA
PB
PC
PCD
PD
PF
PFO
PH
PJ
CORE
PK2
PK2B
PK2L
PL
PN
PN-B
PP
PQ
PR
PU
PW
RA
SM
TN

Suction Cup

PPG	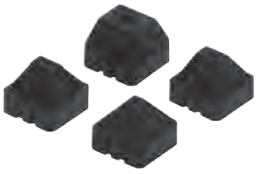	Cup size (mm) 0.55X0.55～ 2.0X2.8		P.437

Fitting

Fitting		Applicable cup size (mm)	Stroke (mm)	Vacuum port	Piping specifications	Page
PPH-001		All size	N/A	Top	φ3 straight	P.439
PPH-002		All size	N/A	Top	M3X0.5 (Male screw)	P.439

Suction Cup Selection Guide ••→ P.163

PPG Cube Cup

How to Order

PPG – 001 – F
① ②

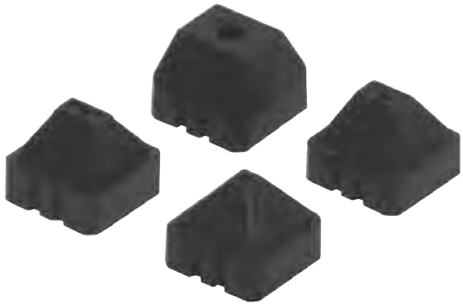

① Cup Size (mm)

Symbol	Cup size
001	0.55X0.55
002	0.5X1.3
003	0.8X1.6
004	1.3X2.8
005	2.0X2.8

② Cup Rubber Material

Symbol	Material
F	Fluorine rubber
FE	Conductive fluorine rubber

※Please consult with us for other material.

Cup Rubber Material Standard Specifications

Symbol	Material	Hardness (A/s)	Ambient temperature (℃)	Color	Volume resistivity Note1.2
F	Fluorine rubber	70	-10～230	Black with white dot	-
FE	Conductive fluorine rubber	70	0～200	Black	10^4～10^7 Ω・cm

Note1) Volume resistivity shows conductivity, resistance value is per cm^3.
Note2) It is the measured value of in our designated test piece.

Applicable Rubber Material Table

Material	Color	Symbol	Cube type				
			001	002	003	004	005
Fluorine rubber	Black with white dot	F	●	●	●	●	●
Conductive fluorine rubber	Black	FE	●	●	●	●	●

●: In stock ○Made to order ×: None
※Please consult with us for other material.

Dimensions

(mm)

PPG-001

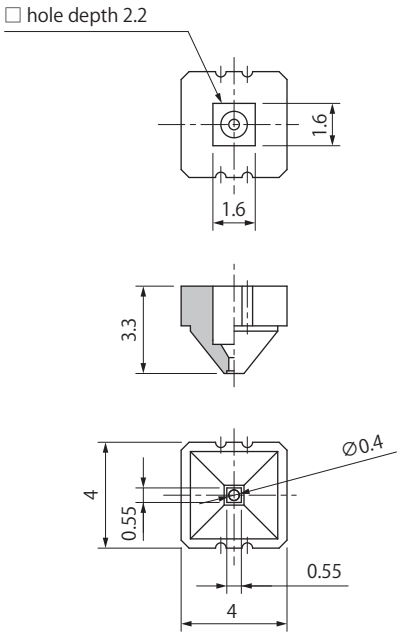

PPG-002

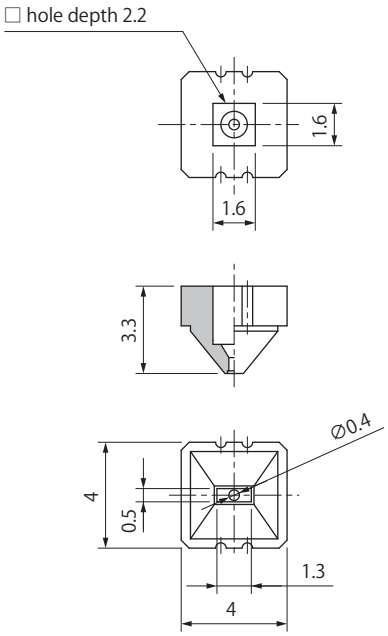

PPG-003

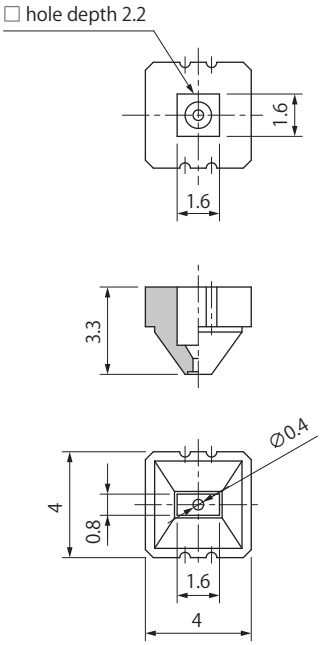

PPG-004

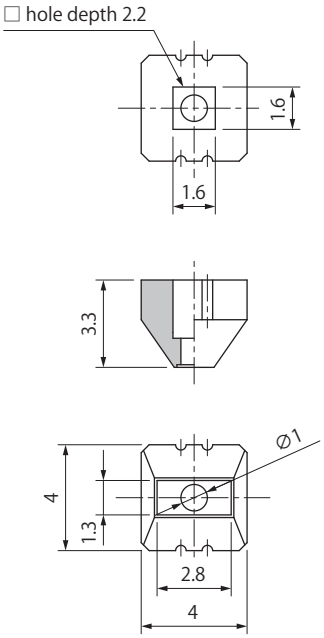

PPG-005

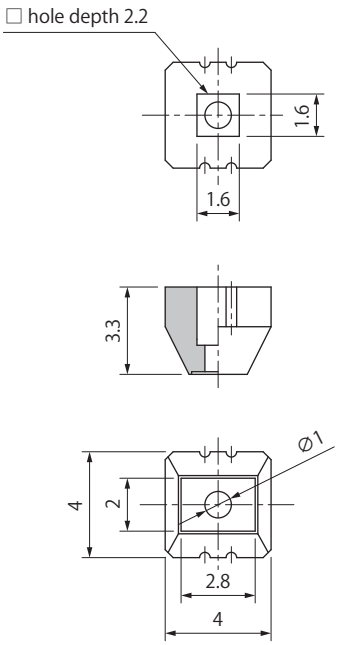

Weight

(g)

Model ＼ Material	F	FE
PPG-001	0.1	0.1
PPG-002	0.1	0.1
PPG-003	0.1	0.1
PPG-004	0.1	0.1
PPG-005	0.1	0.1

Symbol	Material
F	Fluorine rubber
FE	Conductive fluorine rubber

PPH Fitting for PPG

How to Order

PPH — 001
①

① Fitting Type

001	ϕ3 straight
002	M3 X 0.5 (Male)

Fitting Specifications

Model number	Material	Weight (g)
PPH-001	Stainless	0.5
PPH-002		0.3

Dimensions

(mm)

PPH-001

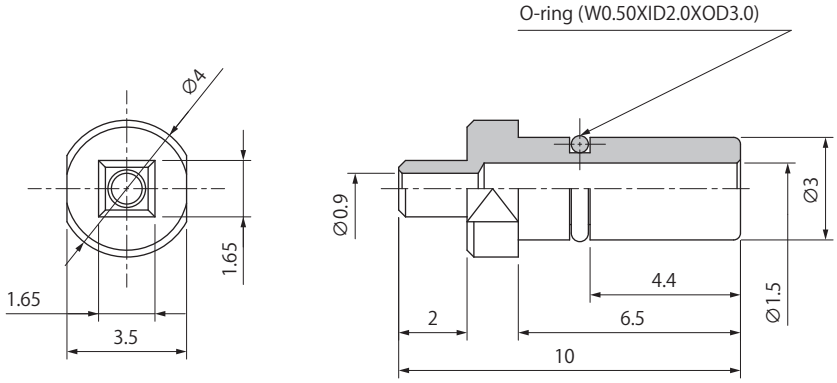

PPH-002

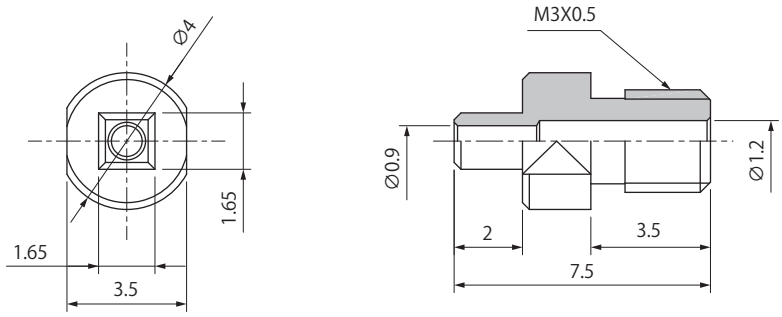

PQ Series

Non-rotation Cup

RoHS

Cup with structure preventing rotation of attachment portion.
For workpieces with smooth and pliable surfaces,
and workpieces that resist rotation of cup !

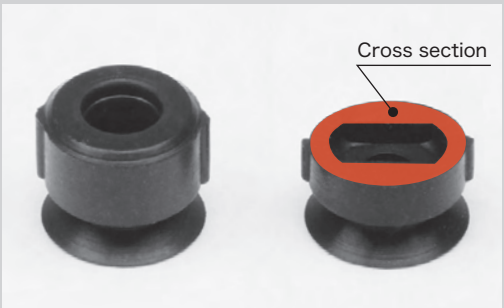

Non-rotation function

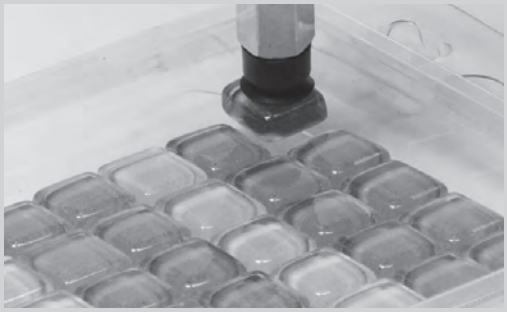

Line up the parts

Specializing in small size.

ϕ6 ϕ8 ϕ10

Suction Cup

PQG	Cup size (mm) ϕ 6 ~ 10		P.443

Fitting

Type	Applicable cup size (mm)	Stroke (mm)	Vacuum port	Piping・Connector	Page
Cup with non-rotation spring fitting NAPQTH	ϕ 6 ~ 10	3, 10, 15	Top	Female screw Push-in Barb	P.445
Cup with non-rotation spring fitting NAPQYH	ϕ 6 ~ 10	3, 10, 15	Side	Female screw Push-in Barb	P.445

Suction Cup Selection Guide ••→ P.163

PQG Non-rotation Cup

How to Order

PQG – 6 – N
① ②

① Cup Size (mm)

Symbol	Cup size
6	ϕ6
8	ϕ8
10	ϕ10

② Cup Rubber Material

Symbol	Material
N	NBR (Nitrile rubber)
S	Silicone rubber
U	Urethane rubber
F	Fluorine rubber
NE	Conductive NBR (Nitrile rubber)
SE	Conductive silicone rubber

※ Please consult with us for other material.

Cup Rubber Material Standard Specifications

Symbol	Material	Hardness (A/s)	Ambient temperature (℃)	Color	Volume resistivity Note1.2
N	NBR (Nitrile rubber)	55	-26～120	Black	-
S	Silicone rubber	55	-60～250	Translucent white	-
U	Urethane rubber	55	-20～75	Blue	-
F	Fluorine rubber	70	-10～230	Black with white dot	-
NE	Conductive NBR (Nitrile rubber)	70	-26～120	Black with blue dot	10^2～10^3 Ω・cm
SE	Conductive silicone rubber	55	-60～250	Black with red dot	10^2～10^4 Ω・cm

Note1) Volume resistivity shows conductivity, resistance value is per cm^3.
Note2) It is the measured value of in our designated test piece.

Applicable Rubber Material Table

Material	Color	Symbol	Round type		
			6	8	10
NBR(Nitrile rubber)	Black	N	●	●	●
Silicone rubber	Translucent white	S	●	●	●
Urethane rubber	Blue	U	●	●	●
Fluorine rubber	Black with white dot	F	●	●	●
Conductive NBR (Nitrile rubber)	Black with blue dot	NE	●	●	●
Conductive silicone rubber	Black with red dot	SE	●	●	●

●: In stock ○Made to order ×: None
※Please consult with us for other material.

Dimensions

(mm)

PQG-6

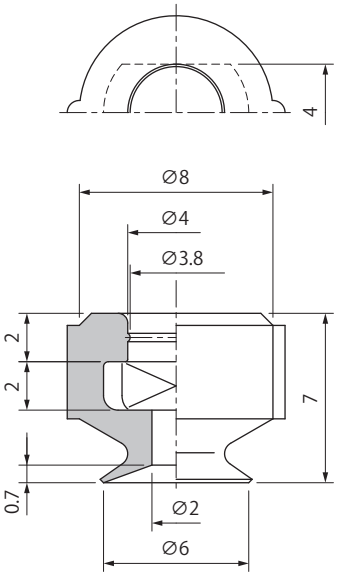

PQG-8

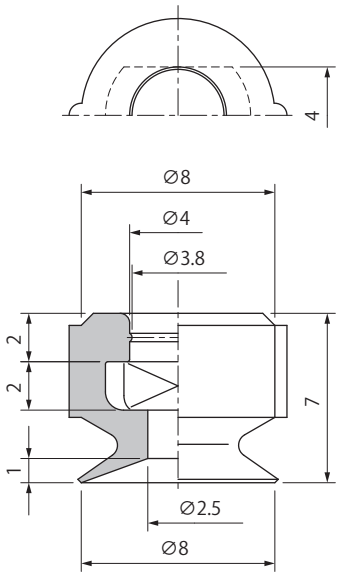

PQG-10

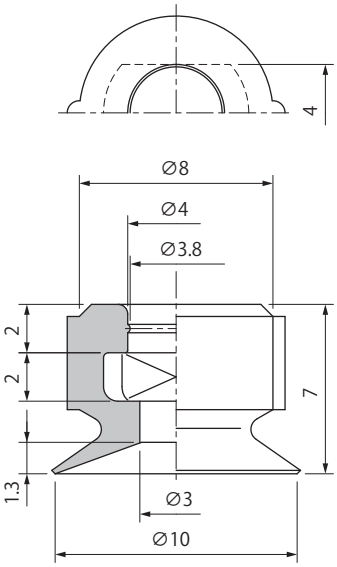

Weight

(g)

Model ＼ Material	N	S	U	F	NE	SE
PQG-6	0.3	0.3	0.3	0.4	0.3	0.3
PQG-8	0.3	0.3	0.3	0.4	0.3	0.3
PQG-10	0.3	0.3	0.3	0.5	0.3	0.3

Symbol	Material
N	NBR(Nitrile rubber)
S	Silicone rubber
U	Urethane rubber
F	Fluorine rubber
NE	Conductive NBR (Nitrile rubber)
SE	Conductive silicone rubber

NAPQTH·YH Cup with Non-rotation Spring Fitting

Consisting of fitting and suction cup.

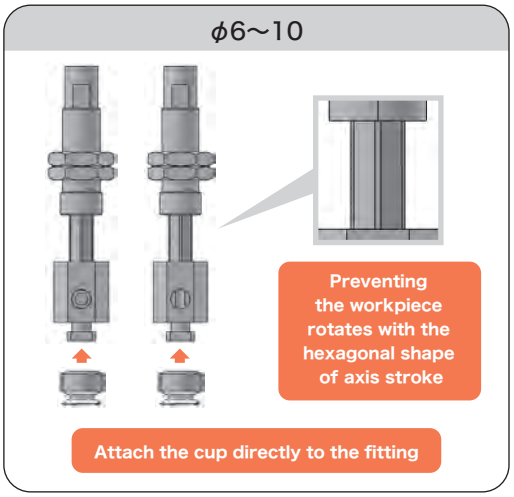

How to Order

NAPQ **T** H – **6-3** – **N** – **T**

① ② ③ ④

① Vacuum Port

T	Top
Y	Side

② Cup Size・Stroke (mm)

Symbol	Cup size Stroke
6-3	ϕ6-3
6-10	ϕ6-10
6-15	ϕ6-15
8-3	ϕ8-3
8-10	ϕ8-10
8-15	ϕ8-15

Symbol	Cup size Stroke
10-3	ϕ10-3
10-10	ϕ10-10
10-15	ϕ10-15

③ Cup Rubber Material

Symbol	Material
N	NBR(Nitrile rubber)
S	Silicone rubber
U	Urethane rubber
F	Fluorine rubber
NE	Conductive NBR (Nitrile rubber)
SE	Conductive silicone rubber

※ Please consult with us for other material.

④ Connector

Blank	N/A
T	Barb
O	Push-in

Spring Specifications

Cup size	Unit	ϕ6~10		
Stroke	mm	3	10	15
Spring load at 0 stroke	N	0.61		0.64
Spring load at full stroke	N	0.77	1.17	

Combination Table

Model number	Cup	Setting screw	Fitting	Piping specifications		
				Without connector・blank	Barb connector・T	Push-in connector・O
NAPQ○H-6-3-□ (-T/O)	PQG-6-□	Attach the cup directly to the fitting	NAPQ○H-6-3-K (-T/O)	M5X0.8 (Female)	ϕ6 X 4	
NAPQ○H-6-10-□ (-T/O)			NAPQ○H-6-10-K (-T/O)			
NAPQ○H-6-15-□ (-T/O)			NAPQ○H-6-15-K (-T/O)			
NAPQ○H-8-3-□ (-T/O)	PQG-8-□		NAPQ○H-6-3-K (-T/O)			
NAPQ○H-8-10-□ (-T/O)			NAPQ○H-6-10-K (-T/O)			
NAPQ○H-8-15-□ (-T/O)			NAPQ○H-6-15-K (-T/O)			
NAPQ○H-10-3-□ (-T/O)	PQG-10-□		NAPQ○H-6-3-K (-T/O)			
NAPQ○H-10-10-□ (-T/O)			NAPQ○H-6-10-K (-T/O)			
NAPQ○H-10-15-□ (-T/O)			NAPQ○H-6-15-K (-T/O)			

※□ in the table indicates the cup material.
※○ in the table indicates the vacuum port (T or Y).

Dimensions

(mm)

NAPQT/YH-6

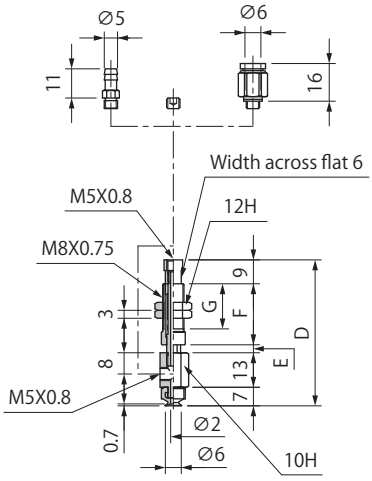

Model number	D	E	F	G	Weight (g)
NAPQT/YH-6-3-□ (-T/O)	55	3	23	17	18.5
NAPQT/YH-6-10-□ (-T/O)	62	10			19
NAPQT/YH-6-15-□ (-T/O)	74.5	15	30.5	24.5	22

※□ in the table indicates the cup material.
※ The weight value is when NBR（Nitrile rubber）/ without connector selected.

NAPQT/YH-8

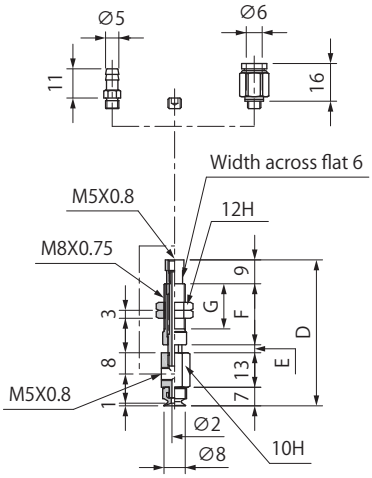

Model number	D	E	F	G	Weight (g)
NAPQT/YH-8-3-□ (-T/O)	55	3	23	17	18.5
NAPQT/YH-8-10-□ (-T/O)	62	10			19
NAPQT/YH-8-15-□ (-T/O)	74.5	15	30.5	24.5	22

※□ in the table indicates the cup material.
※ The weight value is when NBR（Nitrile rubber）/ without connector selected.

NAPQT/YH-10

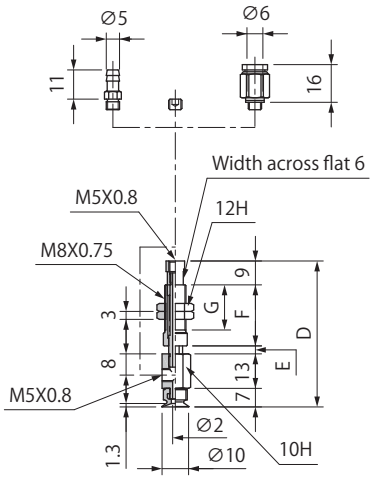

Model number	D	E	F	G	Weight (g)
NAPQT/YH-10-3-□ (-T/O)	55	3	23	17	18.5
NAPQT/YH-10-10-□ (-T/O)	62	10			19
NAPQT/YH-10-15-□ (-T/O)	74.5	15	30.5	24.5	22

※□ in the table indicates the cup material.
※ The weight value is when NBR（Nitrile rubber）/ without connector selected.

Common Specifications

Connector Weight(g)

Symbol	Tube O.D ϕ 6
T	1.5
O	4.0

PR Series

Cup for Round Bar

RoHS

Cup specialized for round bars, for workpieces with cylindrical shape!

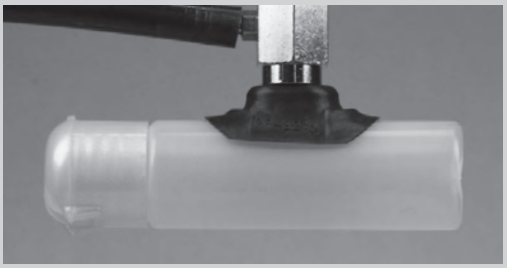

Plastic container

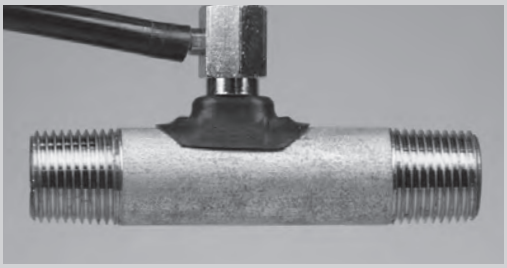

Metal rod

Wide range of cup sizes.

9.5×25 | 12.5×23 | 15×30 | 32×32

Various fittings for many kinds of applications.

Fixed fitting

Non-rotation spring fitting

Suction Cup

PRG	Cup size (mm) 9.5×25 ~ 32×32		P.449

Fitting

Type	Applicable cup size (mm)	Stroke (mm)	Vacuum port	Piping・Connector	Page
Cup with fixed fitting PRTK 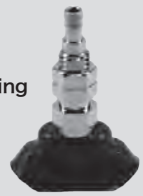	9.5×25 ~ 32×32	N/A	Top	Barb	P.451
Cup with fixed fitting PRYK	9.5×25 ~ 32×32	N/A	Side	Barb	P.451
Cup with non-rotation spring fitting NAPRTH	9.5×25 ~ 32×32	6, 15, 30	Top	Female screw Push-in Barb	P.455
Cup with non-rotation spring fitting NAPRYH	9.5×25 ~ 32×32	6, 15, 30	Side	Female screw Push-in Barb	P.455
Setting screw	9.5×25 ~ 32×32	-	-	-	P.503

Suction Cup Selection Guide ••→ P.163

PRG Cup for Round Bar

How to Order

PRG — 9.5X25 — N
① ②

① Cup Size (diameter X length) mm

9.5X25
12.5X23
15X30
32X32

② Cup Rubber Material

Symbol	Material
N	NBR(Nitrile rubber)
S	Silicone rubber

※Please consult with us for other material.

Cup Rubber Material Standard Specifications

Symbol	Material	Hardness (A/s)	Ambient temperature (℃)	Color
N	NBR(Nitrile rubber)	55	-26～120	Black
S	Silicone rubber	55	-60～250	Translucent white

Applicable Rubber Material Table

Material	Color	Symbol	Oval type			
			9.5X25	12.5X23	15X30	32X32
NBR(Nitrile rubber)	Black	N	●	●	●	●
Silicone rubber	Translucent white	S	●	●	●	●

●: In stock ○Made to order ×: None
※Please consult with us for other material.

Dimensions

(mm)

PRG-9.5X25

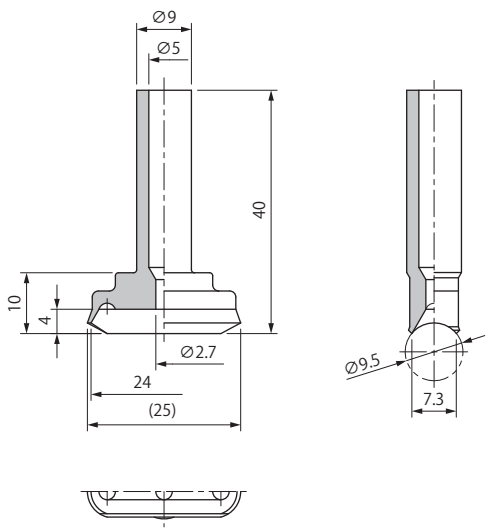

PRG-12.5X23

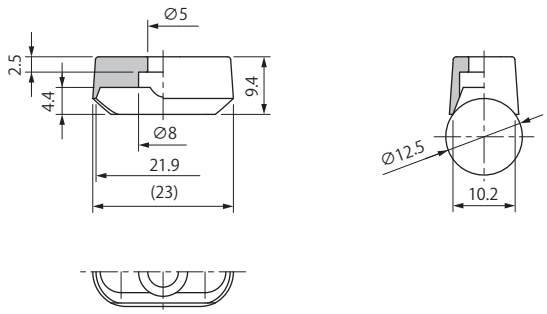

PRG-15X30

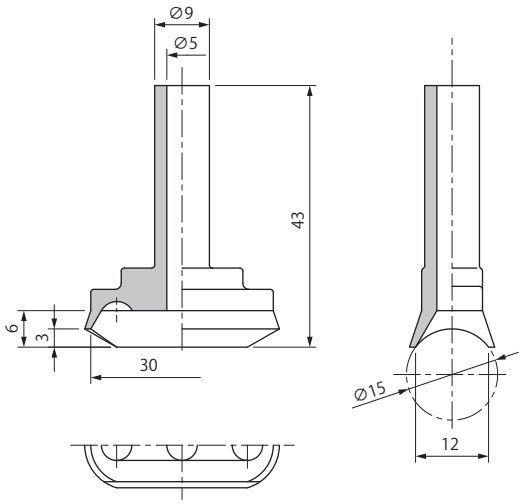

PRG-32X32

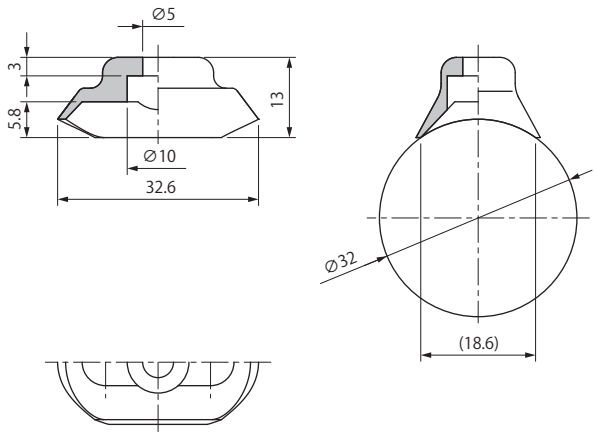

Weight

(g)

Model ＼ Material	N	S	Applicable setting screw (Screw specifications)
PRG-9.5X25	2.5	2.5	TN-PR-15-M5 (Male M5X0.8)
PRG-15X30	4.0	4.0	
PRG-12.5X23	1.3	1.3	TN-PF-15-M5 (Male M5X0.8)
PRG-32X32	1.9	1.9	TN-PF-20-M5 (Male M5X0.8)

※Please refer to P.503 for setting screw detailed specifications.

Symbol	Material
N	NBR(Nitrile rubber)
S	Silicone rubber

PRTK•YK Cup with Fixed Fitting

Consisting of fitting, setting screw, suction cup.

9.5X25~32X32

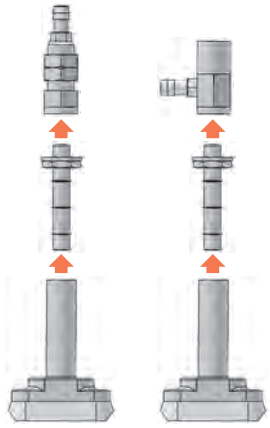

Attach the cup to the fitting with setting screw

※ The setting screw for12.5X23,32X32 are different from image.

How to order

PR T K – 9.5X25 – N

① ② ③

① Vacuum Port

T	Top
Y	Side

② Cup Size (diameter X length) mm

9.5X25
12.5X23
15X30
32X32

③ Cup Rubber Material

Symbol	Material
N	NBR(Nitrile rubber)
S	Silicone rubber

※Please consult with us for other material.

Combination Table

Top Port

Model number	Cup	Setting screw	Fitting	Piping specifications	
PRTK-9.5X25- □	PRG-9.5X25- □	TN-PR-15-M5	PFTK-15-K	Barb	ϕ6 X 4
PRTK-15X30- □	PRG-15X30- □				
PRTK-12.5X23- □	PRG-12.5X23- □	TN-PF-15-M5			
PRTK-32X32- □	PRG-32X32- □	TN-PF-20-M5			

※□ in the table indicates the cup material.

Side Port

Model number	Cup	Setting screw	Fitting	Piping specifications	
PRYK-9.5X25- □	PRG-9.5X25- □	TN-PR-15-M5	PFYK-15-K	Barb	ϕ6 X 4
PRYK-15X30- □	PRG-15X30- □				
PRYK-12.5X23- □	PRG-12.5X23- □	TN-PF-15-M5			
PRYK-32X32- □	PRG-32X32- □	TN-PF-20-M5			

※□ in the table indicates the cup material.

PRTK•YK Cup with Fixed Fitting

Dimensions

(mm)

Top Port PRTK-9.5X25/15X30

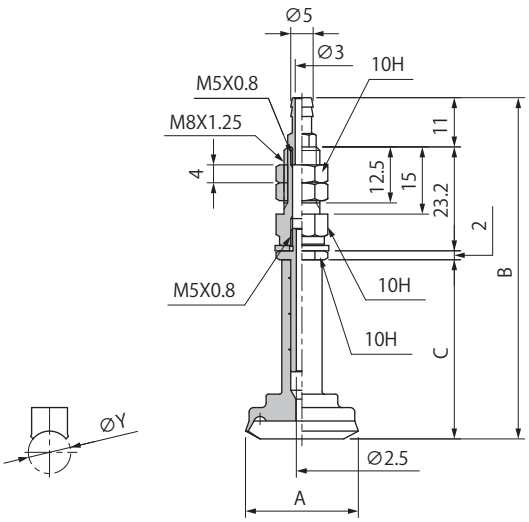

Model number	A	B	C	Y	Weight (g)
PRTK-9.5X25-□	25	76.2	40	9.5	20
PRTK-15X30-□	32	79.2	43	15	21

※□ in the table indicates the cup material.
※ The weight value is when NBR (Nitrile rubber) selected.

Top Port PRTK-12.5X23

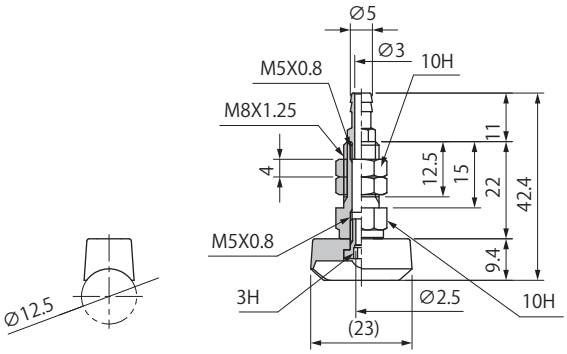

Model number	Weight (g)
PRTK-12.5X23-□	14

※□ in the table indicates the cup material.
※ The weight value is when NBR (Nitrile rubber) selected.

Top Port PRTK-32X32

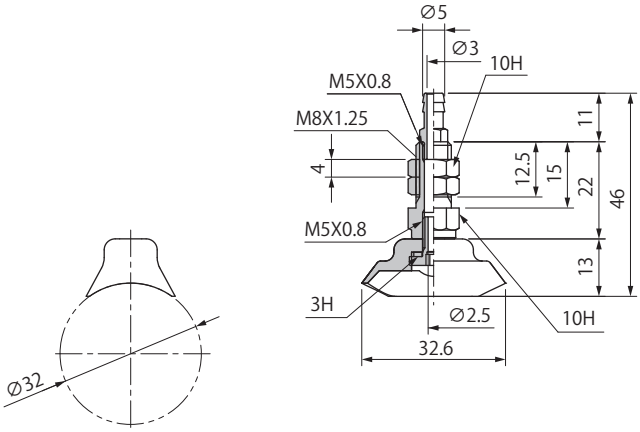

Model number	Weight (g)
PRTK-32X32-□	15

※□ in the table indicates the cup material.
※ The weight value is when NBR (Nitrile rubber) selected.

Dimensions

(mm)

Side Port PRYK-9.5X25/15X30

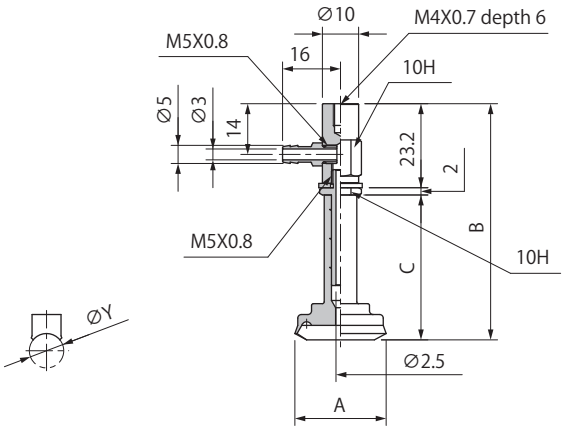

Model number	A	B	C	Y	Weight (g)
PRYK-9.5X25-□	25	65.2	40	9.5	23
PRYK-15X30-□	32	68.2	43	15	24

※□ in the table indicates the cup material.
※ The weight value is when NBR（Nitrile rubber）selected.

Side Port PRYK-12.5X23

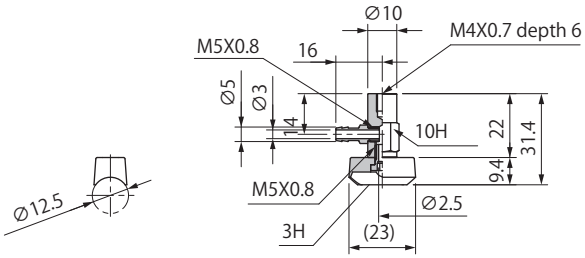

Model number	Weight (g)
PRYK-12.5X23-□	17

※□ in the table indicates the cup material.
※ The weight value is when NBR（Nitrile rubber）selected.

Side Port PRYK-32X32

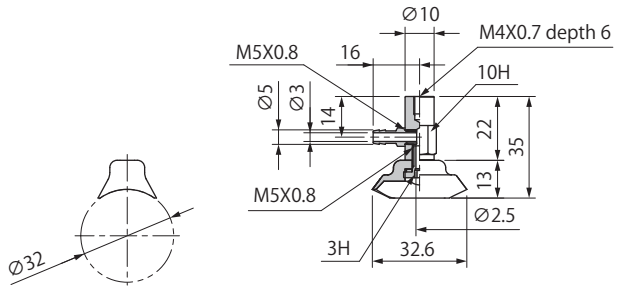

Model number	Weight (g)
PRYK-32X32-□	18

※□ in the table indicates the cup material.
※ The weight value is when NBR（Nitrile rubber）selected.

NAPRTH•YH Cup with Non-rotation Spring Fitting

Consisting of fitting, setting screw, suction cup.

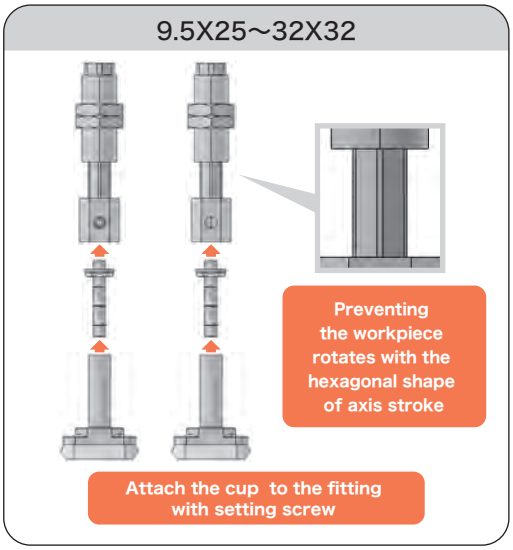

※ The setting screw for12.5X23, 32X32 are different from image.

How to Order

NAPR **T** H – **9.5X25-6** – **N** – **T**

① ② ③ ④

① Vacuum Port

T	Top
Y	Side

② Cup Size (diameter X length) mm

9.5X25-6	15X30-6
9.5X25-15	15X30-15
9.5X25-30	15X30-30
12.5X23-6	32X32-6
12.5X23-15	32X32-15
12.5X23-30	32X32-30

③ Cup Rubber Material

Symbol	Material
N	NBR(Nitrile rubber)
S	Silicone rubber

※ Please consult with us for other material.

④ Connector

Blank	N/A
T	Barb
O	Push-in

Spring Specifications

Cup size	Unit	9.5X25~32X32		
Stroke	mm	6	15	30
Spring load at 0 stroke	N	2.45		2.9
Spring load at full stroke	N	3.43	4.9	5.88

Combination Table

Model Number	Cup	Setting Screw	Fitting	Piping Specifications		
				Without connector・Blank	Barb connector・T	Push-in connector・O
NAPR○H-9.5X25-6-□ (-T/O)	PRG-9.5X25-□	TN-PR-15-M5	NAPB○H-20-6-K (-T/O)	M5X0.8 (Female)	φ6 X 4	
NAPR○H-9.5X25-15□ (-T/O)			NAPB○H-20-15-K (-T/O)			
NAPR○H-9.5X25-30-□ (-T/O)			NAPB○H-20-30-K (-T/O)			
NAPR○H-12.5X23-6-□ (-T/O)	PRG-12.5X23-□	TN-PF-15-M5	NAPB○H-20-6-K (-T/O)			
NAPR○H-12.5X23-15□ (-T/O)			NAPB○H-20-15-K (-T/O)			
NAPR○H-12.5X23-30-□ (-T/O)			NAPB○H-20-30-K (-T/O)			
NAPR○H-15X30-6-□ (-T/O)	PRG-15X30-□	TN-PR-15-M5	NAPB○H-20-6-K (-T/O)			
NAPR○H-15X30-15□ (-T/O)			NAPB○H-20-15-K (-T/O)			
NAPR○H-15X30-30-□ (-T/O)			NAPB○H-20-30-K (-T/O)			
NAPR○H-32X32-6-□ (-T/O)	PRG-32X32-□	TN-PF-20-M5	NAPB○H-20-6-K (-T/O)			
NAPR○H-32X32-15□ (-T/O)			NAPB○H-20-15-K (-T/O)			
NAPR○H-32X32-30-□ (-T/O)			NAPB○H-20-30-K (-T/O)			

※□ in the table indicates the cup material.
※○ in the table indicates the vacuum port (T or Y).

NAPRTH·YH Cup with Non-rotation Spring Fitting

Dimensions

(mm)

NAPRT/YH-9.5X25

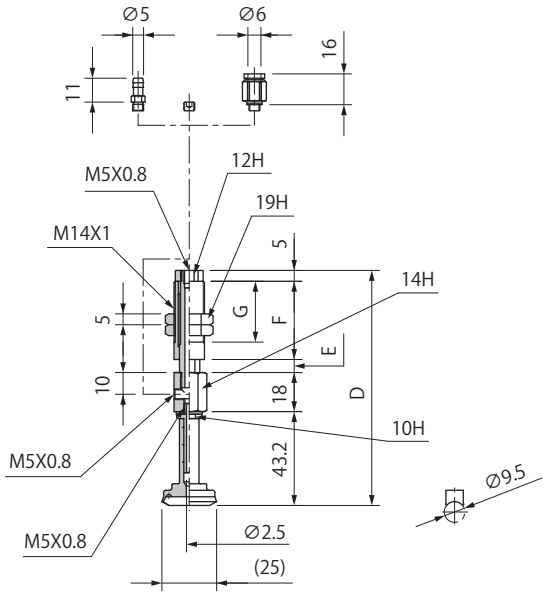

Model number	D	E	F	G	Weight (g)
NAPRT/YH-9.5X25-6-□ (-T/O)	108.2	6	36	28	74.5
NAPRT/YH-9.5X25-15-□ (-T/O)	117.2	15			79.5
NAPRT/YH-9.5X25-30-□ (-T/O)	154.2	30	58	50	103.5

※□ in the table indicates the cup material.
※ The weight value is when NBR（Nitrile rubber）/ without connector selected.

NAPRT/YH-12.5X23

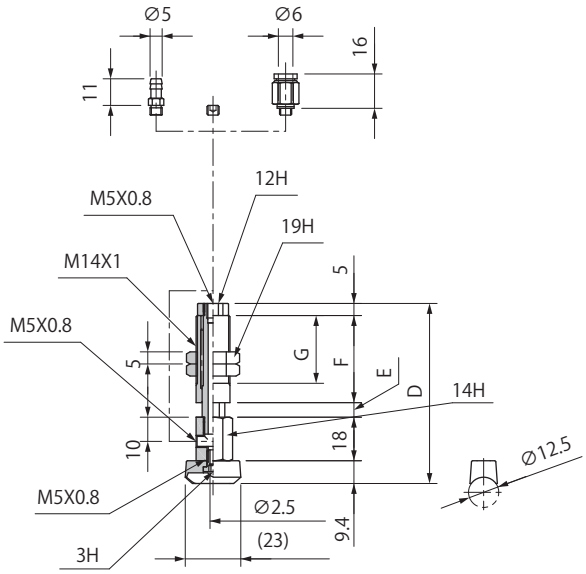

Model number	D	E	F	G	Weight (g)
NAPRT/YH-12.5X23-6-□ (-T/O)	74.4	6	36	28	63.5
NAPRT/YH-12.5X23-15-□ (-T/O)	83.4	15			68.5
NAPRT/YH-12.5X23-30-□ (-T/O)	120.4	30	58	50	92.5

※□ in the table indicates the cup material.
※ The weight value is when NBR（Nitrile rubber）/ without connector selected.

NAPRT/YH-15X30

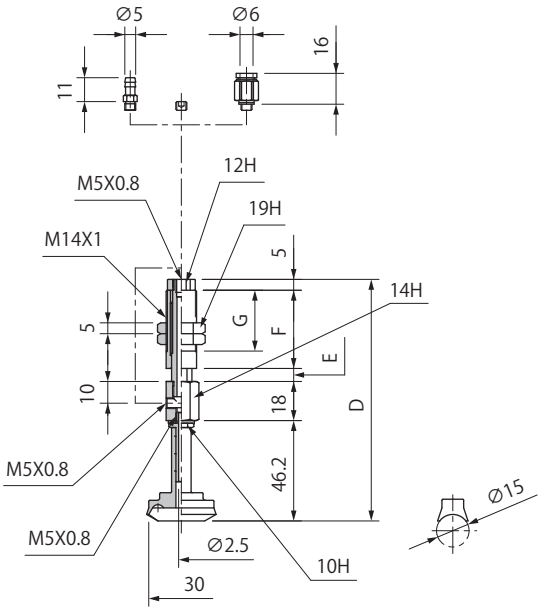

Model number	D	E	F	G	Weight (g)
NAPRT/YH-15X30-6-□ (-T/O)	111.2	6	36	28	74
NAPRT/YH-15X30-15-□ (-T/O)	120.2	15			79
NAPRT/YH-15X30-30-□ (-T/O)	157.2	30	58	50	103

※□ in the table indicates the cup material.
※ The weight value is when NBR（Nitrile rubber）/ without connector selected.

NAPRT/YH-32X32

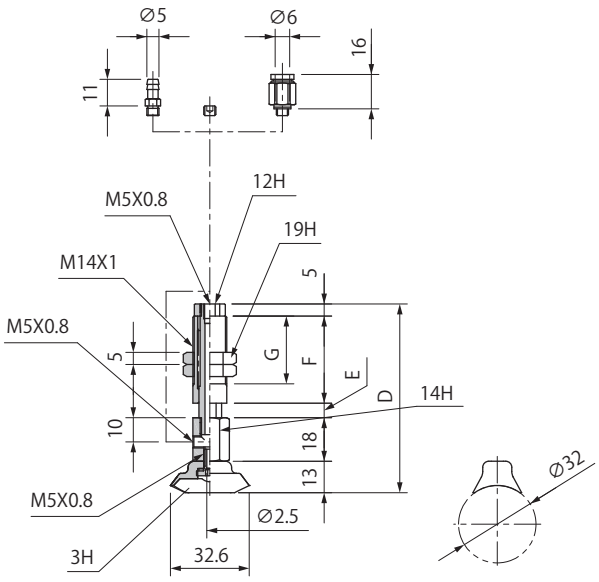

Model number	D	E	F	G	Weight (g)
NAPRT/YH-32X32-6-□ (-T/O)	78	6	36	28	64
NAPRT/YH-32X32-15-□ (-T/O)	87	15			69
NAPRT/YH-32X32-30-□ (-T/O)	124	30	58	50	93

※□ in the table indicates the cup material.
※ The weight value is when NBR（Nitrile rubber）/ without connector selected.

Common Specifications

Connector Weight(g)

Symbol	Tube O.D ϕ 6
T	1.5
O	4.0

PU Series

Swivel Cup

RoHS

The angle of the cup can be changed, for workpieces whose surfaces are not horizontal!

Workpiece whose surface is oblique

Wide range of cup sizes.

ϕ10	ϕ15	ϕ20	ϕ25	ϕ30	ϕ35	ϕ40	ϕ50	ϕ60	ϕ80	ϕ100	ϕ120	ϕ150	ϕ200

Various fittings for many kinds of applications.

Fixed fitting

Spring fitting

Spring fitting with horizontal level retention function

02 Suction Cup
PA
PB
PC
PCD
PD
PF
PFO
PH
PJ
CORE
PK2
PK2B
PK2L
PL
PN
PN-B
PP
PQ
PR
PU
PW
RA
SM
TN

Suction Cup

PUG	Cup size (mm) ϕ10～200		P.461

Fitting

Type	Applicable cup size (mm)	Stroke (mm)	Vacuum port	Piping・Connector	Page
Swivel cup PUGB	ϕ 10～200	N/A	Top	For attachment to fitting	P.465
Cup with fixed fitting PUTKB	ϕ 10～50	N/A	Top	Barb	P.469
	ϕ 60～200			Female screw	
Cup with fixed fitting PUYKB	ϕ 10～50	N/A	Side	Barb	P.469
	ϕ 60～200			Female screw	
Cup with spring fitting NAPUTSB	ϕ 10, 15	3, 10, 15	Top	Female screw Push-in Barb	P.473
	ϕ 20～50	6, 15, 30			
	ϕ 60～100	10, 30, 50		Female screw	
	ϕ 120～200	20, 50			
Cup with spring fitting NAPUYSB	ϕ 10, 15	3, 10, 15	Side	Female screw Push-in Barb	P.473
	ϕ 20～50	6, 15, 30			
	ϕ 60～100	10, 30, 50		Female screw	
	ϕ 120～200	20, 50			
Cup with spring fitting with horizontal level retention function NAPUTSBR	ϕ 60～100	10, 30, 50	Top	Female screw	P.479
	ϕ 120～200	20, 50			
Cup with spring fitting with horizontal level retention function NAPUYSBR	ϕ 60～100	10, 30, 50	Side	Female screw	P.479
	ϕ 120～200	20, 50			

Suction Cup Selection Guide ••→ P.163

PUG Swivel Cup

How to Order

PUG — 10 — N

① ②

① Cup Size (mm)

Symbol	Cup size	Symbol	Cup size
10	φ10	50	φ50
15	φ15	60	φ60
20	φ20	80	φ80
25	φ25	100	φ100
30	φ30	120	φ120
35	φ35	150	φ150
40	φ40	200	φ200

② Cup Rubber Material

Symbol	Material
N	NBR(Nitrile rubber)
S	Silicone rubber
U	Urethane rubber
F	Fluorine rubber

※Please consult with us for other material.

Cup Rubber Material Standard Specifications

Symbol	Material	Hardness (A/s)	Ambient temperature (℃)	Color
N	NBR(Nitrile rubber)	55	-26～120	Black
S	Silicone rubber	55	-60～250	Translucent white
U	Urethane rubber	55	-20～75	Blue
F	Fluorine rubber	70	-10～230	Black with white dot

Applicable Rubber Material Table

Material	Color	Symbol	Round type													
			10	15	20	25	30	35	40	50	60	80	100	120	150	200
NBR(Nitrile rubber)	Black	N	●	●	●	●	●	●	●	●	●	●	●	●	●	●
Silicone rubber	Translucent white	S	●	●	●	●	●	●	●	●	●	●	●	●	●	●
Urethane rubber	Blue	U	●	●	●	●	●	●	●	●	○	○	○	○	○	○
Fluorine rubber	Black with white dot	F	●	●	●	●	●	●	●	●	○	○	○	○	○	○

●: In stock ○Made to order ×: None
※Please consult with us for other material.

Dimensions

(mm)

PUG-10

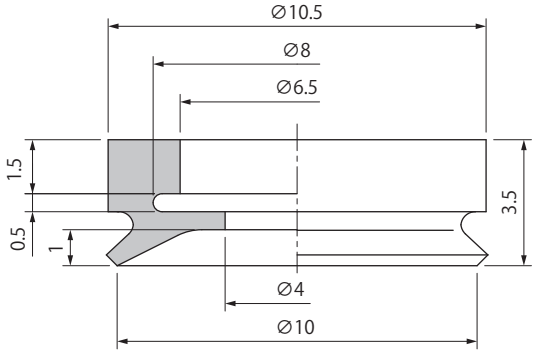

PUG-15

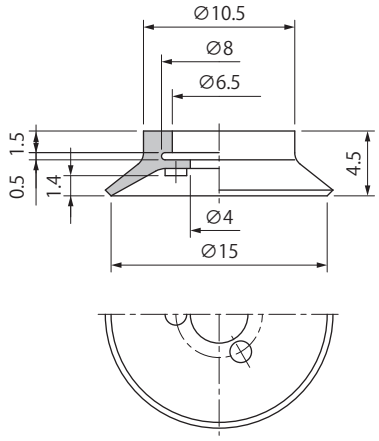

PUG-20

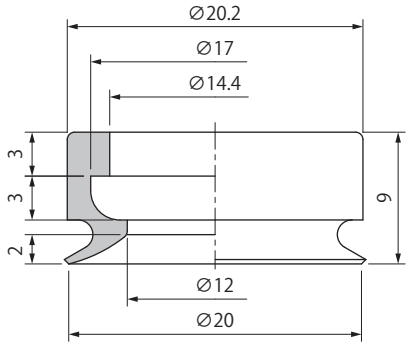

PUG-25

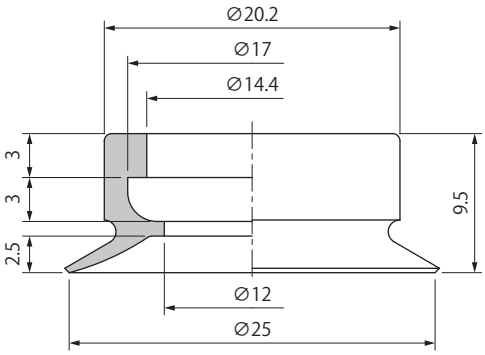

PUG-30

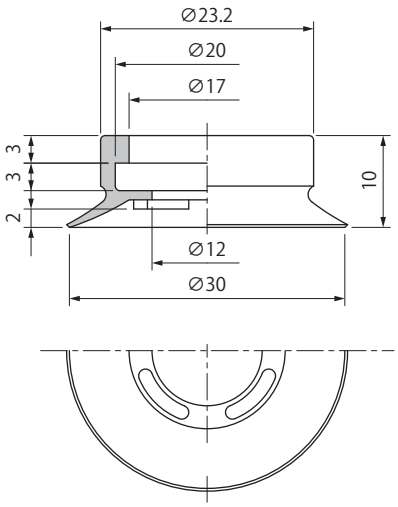

PUG-35

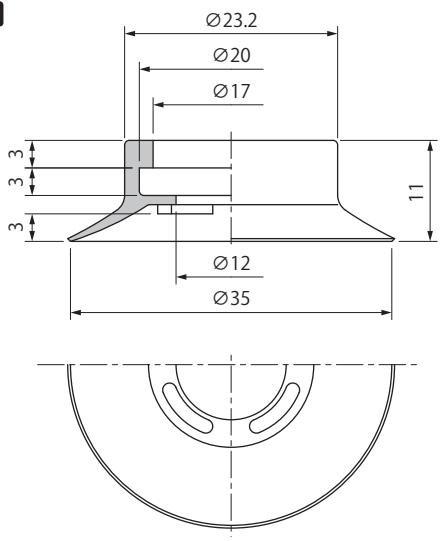

Weight

(g)

Model ＼ Material	N	S	U	F
PUG-10	0.2	0.2	0.2	0.3
PUG-15	0.3	0.3	0.4	0.5
PUG-20	1.3	1.3	1.4	2.1
PUG-25	1.5	1.5	1.6	2.4
PUG-30	1.9	1.9	2.0	3.1
PUG-35	2.3	2.3	2.5	3.7

Symbol	Material
N	NBR(Nitrile rubber)
S	Silicone rubber
U	Urethane rubber
F	Fluorine rubber

PUG Swivel Cup

Dimensions

(mm)

PUG-40

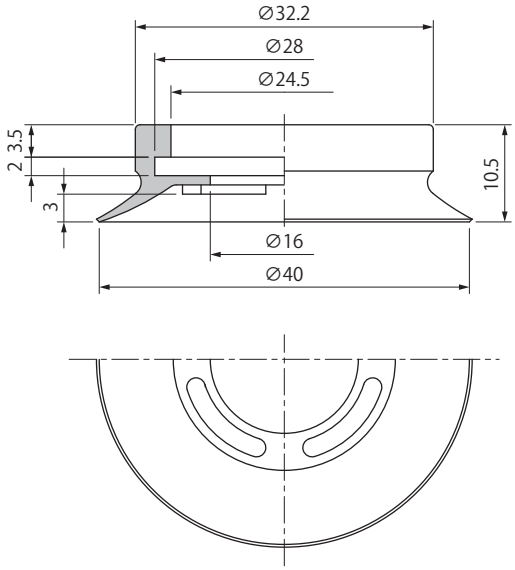

PUG-50

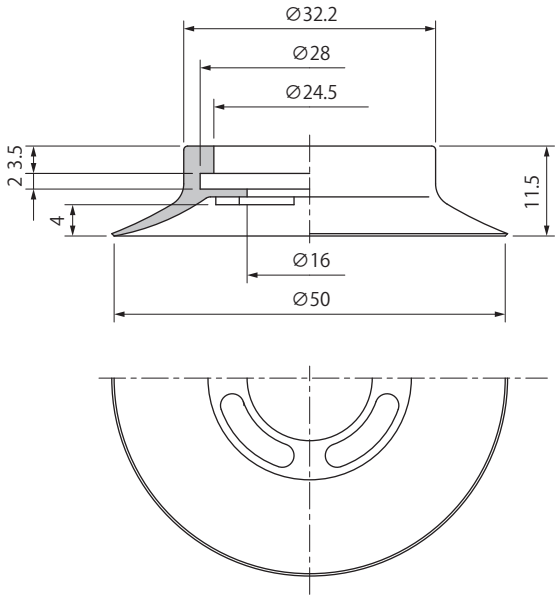

PUG-60

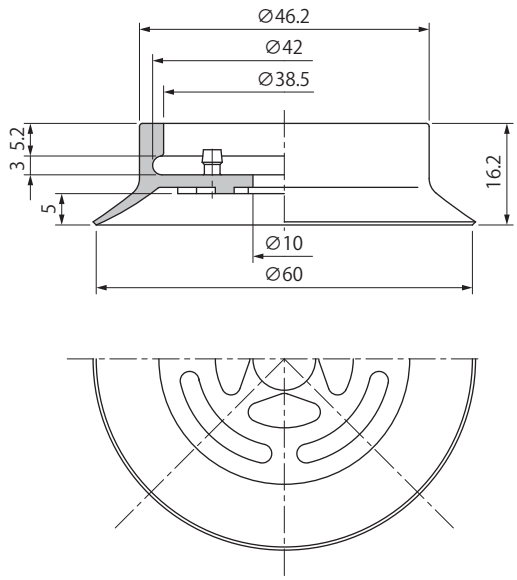

PUG-80

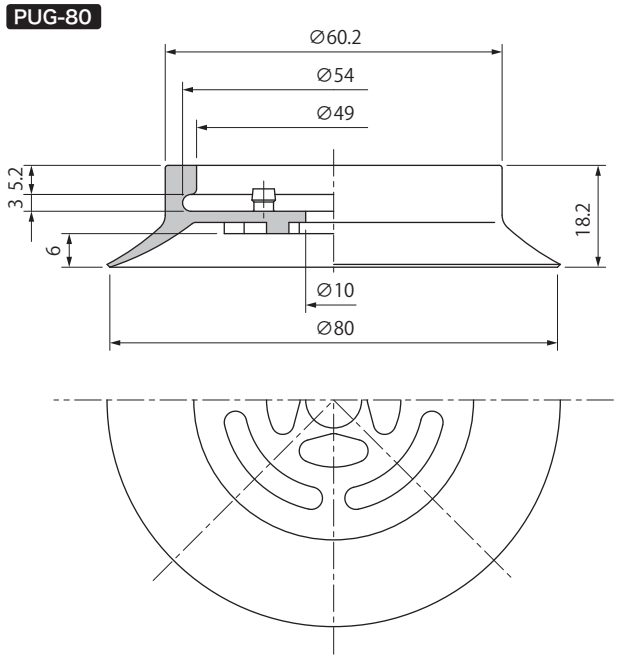

Weight

(g)

Model ＼ Material	N	S	U	F
PUG-40	3.7	3.7	3.9	6.0
PUG-50	5.0	5.0	5.3	8.0
PUG-60	11.8	11.8	12.4	18.9
PUG-80	23	23	24.2	36.8

Symbol	Material
N	NBR(Nitrile rubber)
S	Silicone rubber
U	Urethane rubber
F	Fluorine rubber

Dimensions

(mm)

PUG-100

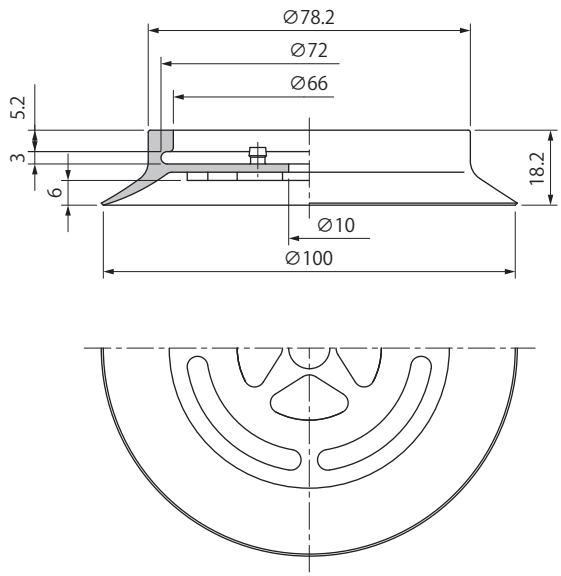

PUG-120

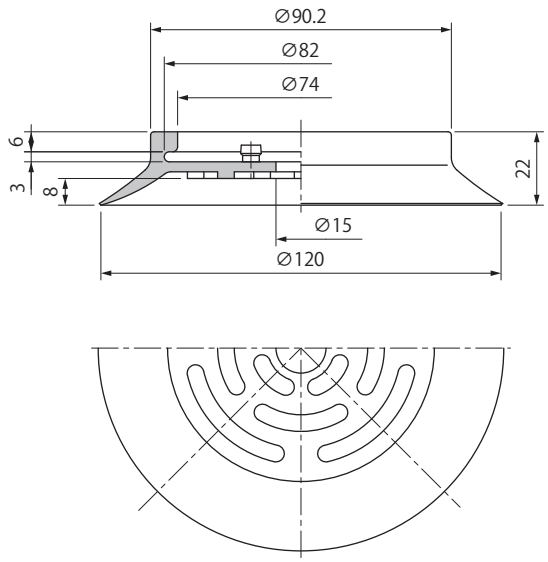

PUG-150

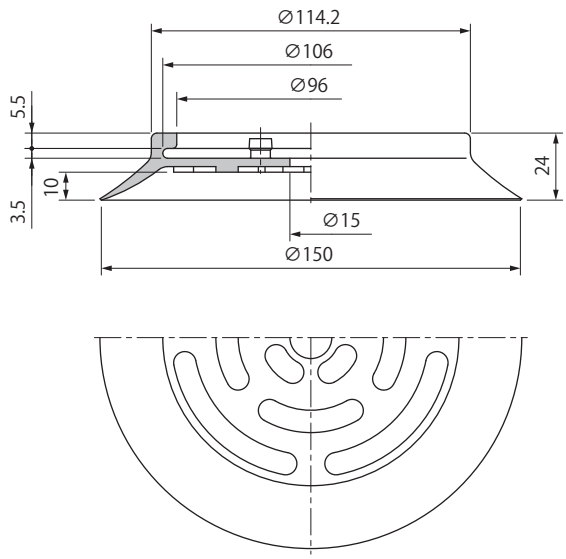

PUG-200

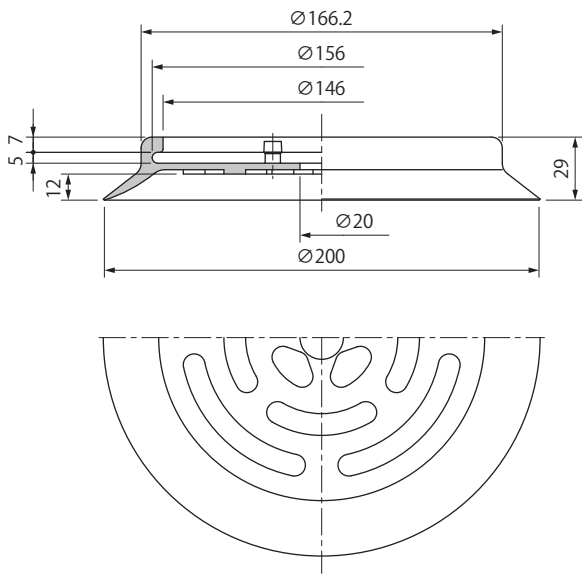

Weight

(g)

Model ＼ Material	N	S	U	F
PUG-100	37.6	37.6	39.5	60.2
PUG-120	68.0	68.0	71.4	108.8
PUG-150	105.0	105.0	110.3	168.0
PUG-200	210.0	210.0	220.5	336.0

Symbol	Material
N	NBR(Nitrile rubber)
S	Silicone rubber
U	Urethane rubber
F	Fluorine rubber

PUGB Swivel Cup

How to Order

PUGB – 10 – N
① ②

① Cup Size (mm)

Symbol	Cup size	Symbol	Cup size
10	ϕ10	50	ϕ50
15	ϕ15	60	ϕ60
20	ϕ20	80	ϕ80
25	ϕ25	100	ϕ100
30	ϕ30	120★	ϕ120
35	ϕ35	150★	ϕ150
40	ϕ40	200★	ϕ200

※★ are made to order.

② Cup Rubber Material

Symbol	Material
N	NBR(Nitrile rubber)
S	Silicone rubber
U	Urethane rubber
F	Fluorine rubber

※Please consult with us for other material.

Dimensions

(mm)

PUGB-10

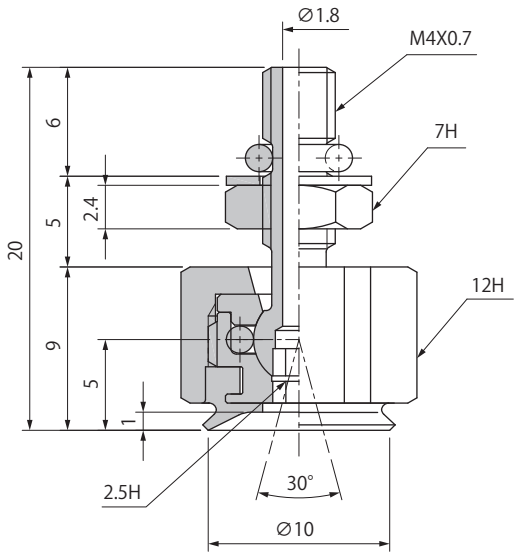

PUGB-15

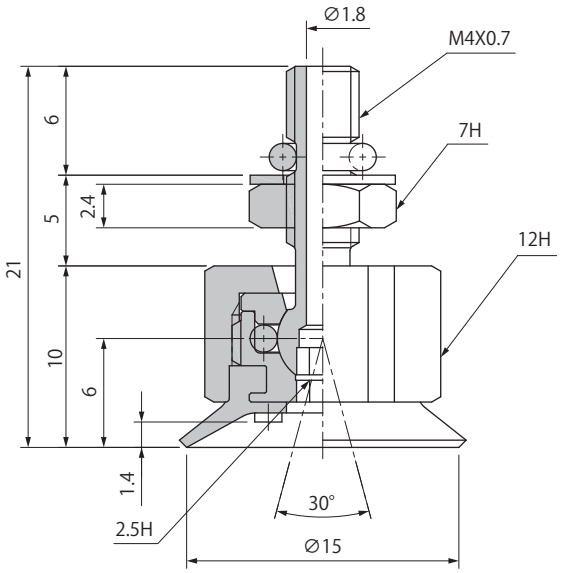

PUGB-20

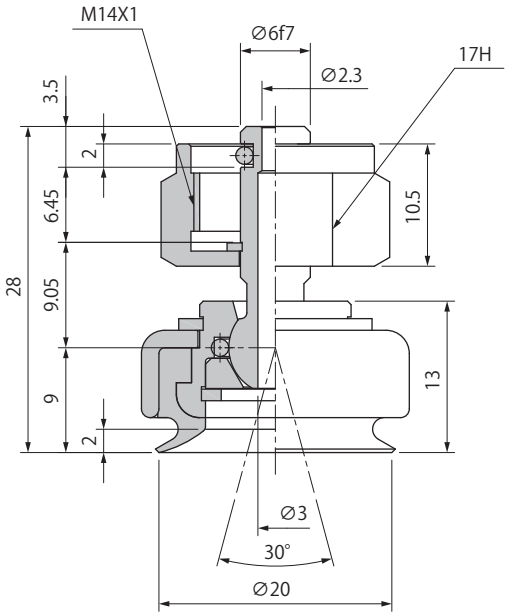

PUGB-25

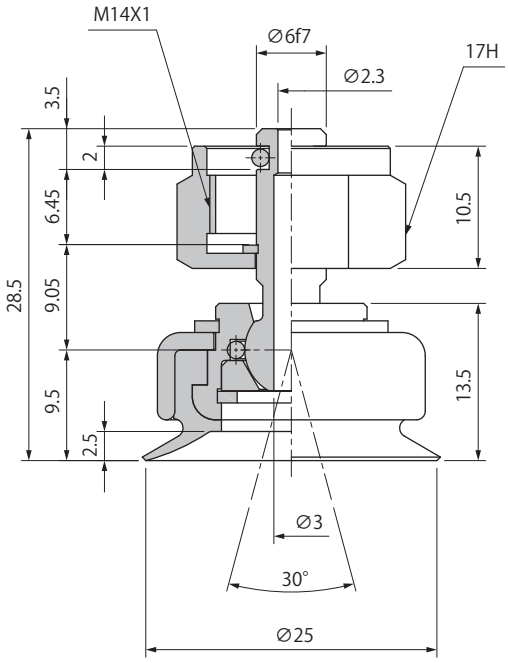

PUGB Swivel Cup

Dimensions

(mm)

PUGB-30

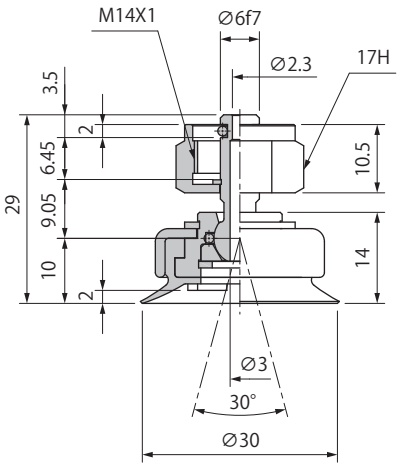

PUGB-35

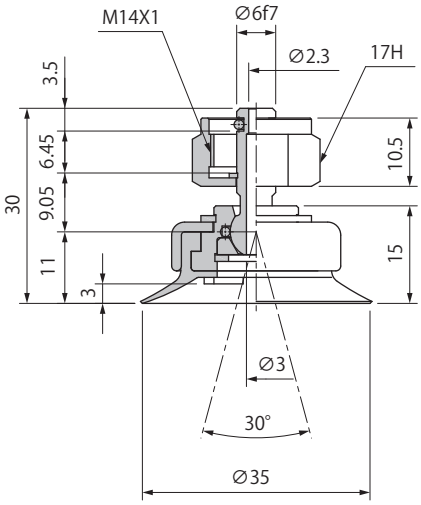

PUGB-40

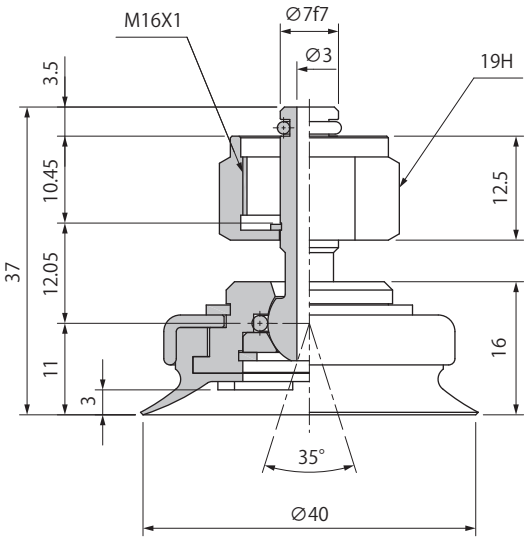

PUGB-50

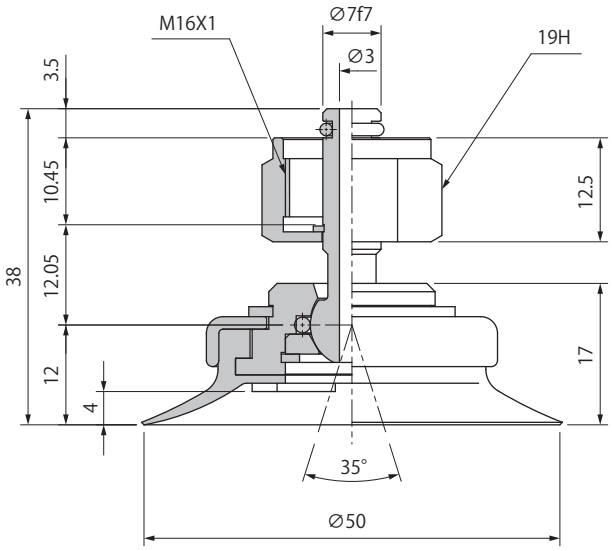

PUGB-60

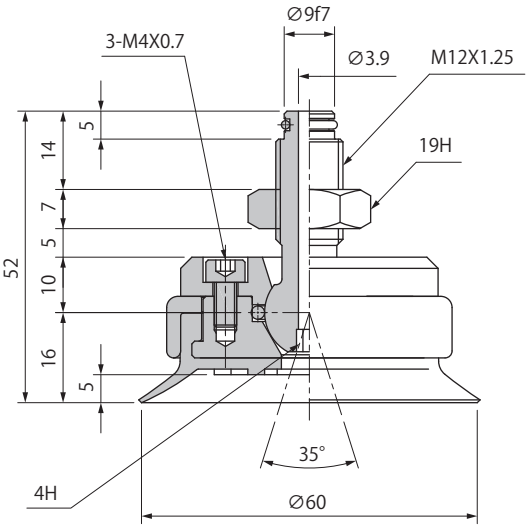

PUGB-80

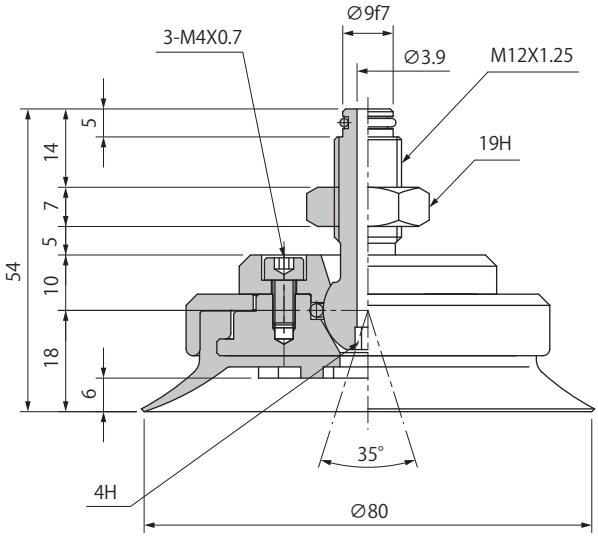

Dimensions

(mm)

PUGB-100

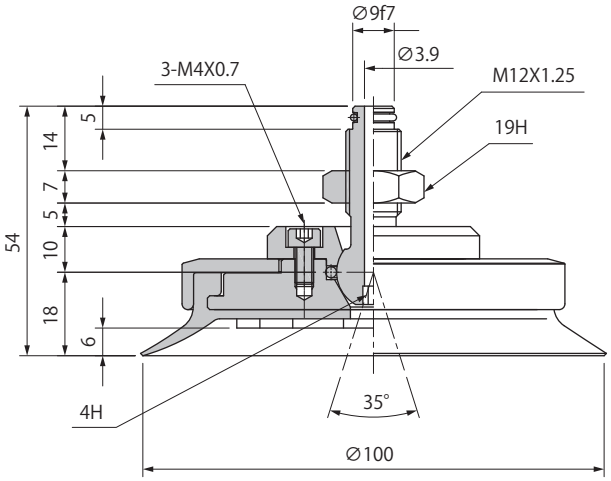

PUGB-120

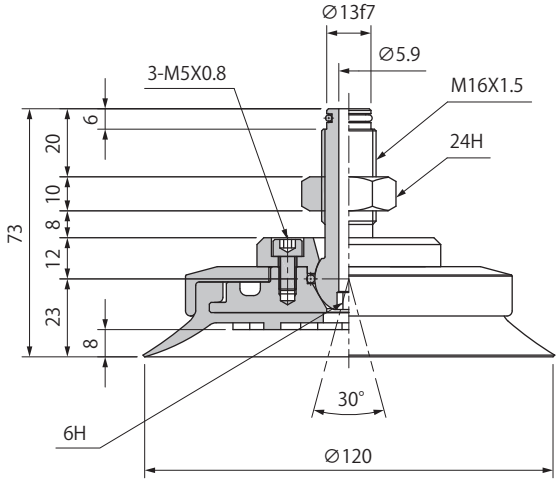

PUGB-150

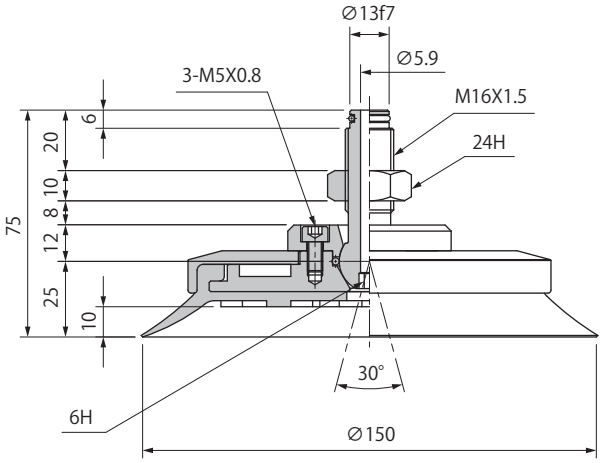

PUGB-200

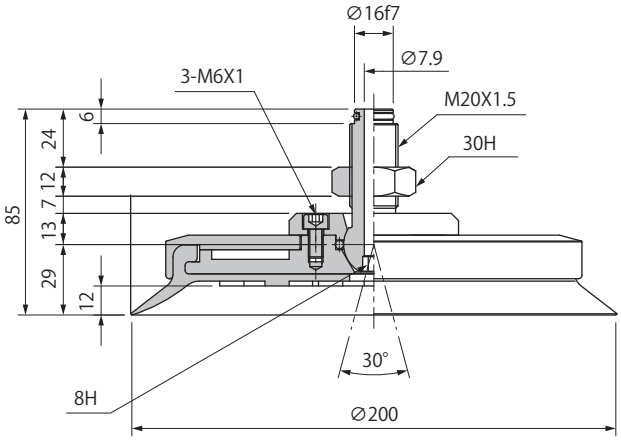

PUTKB•YKB Cup with Fixed Fitting

How to Order

PU T KB – 10 – N

① ② ③

① Vacuum Port

T	Top
Y	Side

② Cup Size (mm)

Symbol	Cup size	Symbol	Cup size
10	ϕ10	50	ϕ50
15	ϕ15	60	ϕ60
20	ϕ20	80	ϕ80
25	ϕ25	100	ϕ100
30	ϕ30	120★	ϕ120
35	ϕ35	150★	ϕ150
40	ϕ40	200★	ϕ200

※★ are made to order.

③ Cup Rubber Material

Symbol	Material
N	NBR(Nitrile rubber)
S	Silicone rubber
U	Urethane rubber
F	Fluorine rubber

※Please consult with us for other material.

Combination Table

ϕ10~200

Top Port
Consisting of fitting and PUGB

Top Port

Model number	PUGB model number	Fitting	Piping specifications	
PUTKB-10- □	PUGB-10- □	PUTKB-10-K	Barb	ϕ6 X 4
PUTKB-15- □	PUGB-15- □			
PUTKB-20- □	PUGB-20- □	PUTKB-20-K		
PUTKB-25- □	PUGB-25- □			
PUTKB-30- □	PUGB-30- □			
PUTKB-35- □	PUGB-35- □			
PUTKB-40- □	PUGB-40- □	PUTKB-40-K		
PUTKB-50- □	PUGB-50- □			
PUTKB-60- □	PUGB-60- □	PUTKB-60-K	Rc1/8 (Female)	
PUTKB-80- □	PUGB-80- □			
PUTKB-100- □	PUGB-100- □			
PUTKB-120- □	PUGB-120- □	PUTKB-120-K	Rc1/4 (Female)	
PUTKB-150- □	PUGB-150- □			
PUTKB-200- □	PUGB-200- □	PUTKB-200-K	Rc3/8 (Female)	

※□ in the table indicates the cup material.

ϕ10~200

Side Port
Consisting of fitting and PUGB

Side Port

Model number	PUGB model number	Fitting	Piping specifications	
PUYKB-10- □	PUGB-10- □	PUYKB-10-K	Barb	ϕ6 X 4
PUYKB-15- □	PUGB-15- □			
PUYKB-20- □	PUGB-20- □	PUYKB-20-K		
PUYKB-25- □	PUGB-25- □			
PUYKB-30- □	PUGB-30- □			
PUYKB-35- □	PUGB-35- □			
PUYKB-40- □	PUGB-40- □	PUYKB-40-K		
PUYKB-50- □	PUGB-50- □			
PUYKB-60- □	PUGB-60- □	PUYKB-60-K	Rc1/8 (Female)	
PUYKB-80- □	PUGB-80- □			
PUYKB-100- □	PUGB-100- □			
PUYKB-120- □	PUGB-120- □	PUYKB-120-K	Rc1/4 (Female)	
PUYKB-150- □	PUGB-150- □			
PUYKB-200- □	PUGB-200- □	PUYKB-200-K		

※□ in the table indicates the cup material.

Dimensions

(mm)

Top Port PUTKB-10 / 15

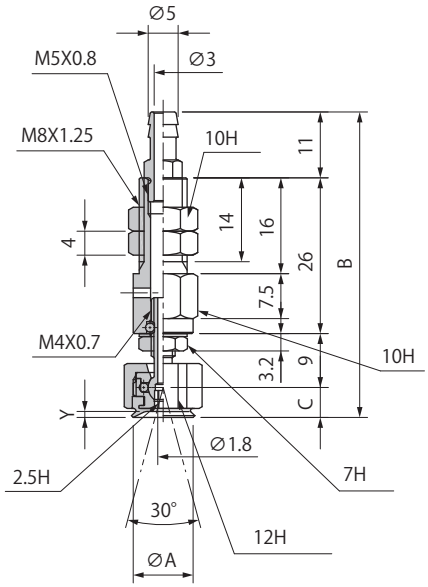

Model number	A	B	C	Y	Weight (g)
PUTKB-10- □	10	51	5	1	20
PUTKB-15- □	15	52	6	1.4	

※□ in the table indicates the cup material.
※ The weight value is when NBR（Nitrile rubber）selected.

Top Port PUTKB-20 / 25 / 30 / 35

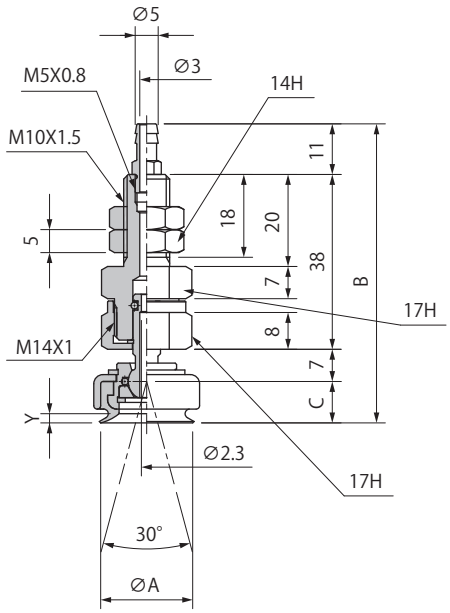

Model number	A	B	C	Y	Weight (g)
PUTKB-20- □	20	65	9	2	66
PUTKB-25- □	25	65.5	9.5	2.5	
PUTKB-30- □	30	66	10	2	71
PUTKB-35- □	35	67	11	3	

※□ in the table indicates the cup material.
※ The weight value is when NBR（Nitrile rubber）selected.

Top Port PUTKB-40 / 50

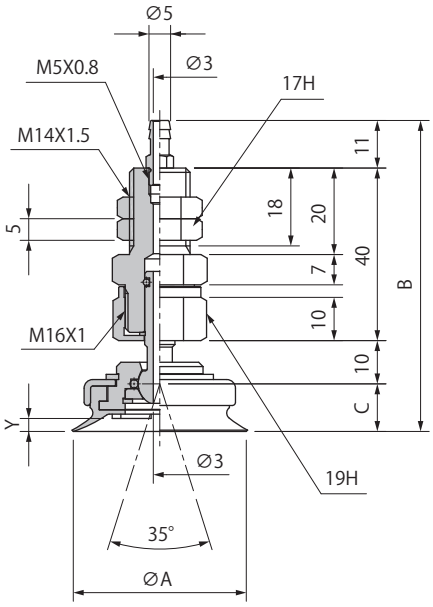

Model number	A	B	C	Y	Weight (g)
PUTKB-40- □	40	72	11	3	118
PUTKB-50- □	50	73	12	4	121

※□ in the table indicates the cup material.
※ The weight value is when NBR（Nitrile rubber）selected.

Top Port PUTKB-60 / 80 / 100

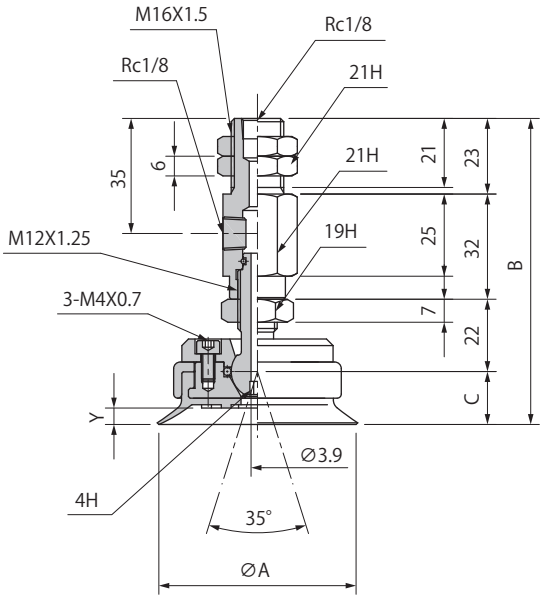

Model number	A	B	C	Y	Weight (g)
PUTKB-60- □	60	93	16	5	352
PUTKB-80- □	80	95	18	6	444
PUTKB-100- □	100				568

※□ in the table indicates the cup material.
※ The weight value is when NBR（Nitrile rubber）selected.

PUTKB•YKB Cup with Fixed Fitting

Dimensions

(mm)

Top Port PUTKB-120 / 150

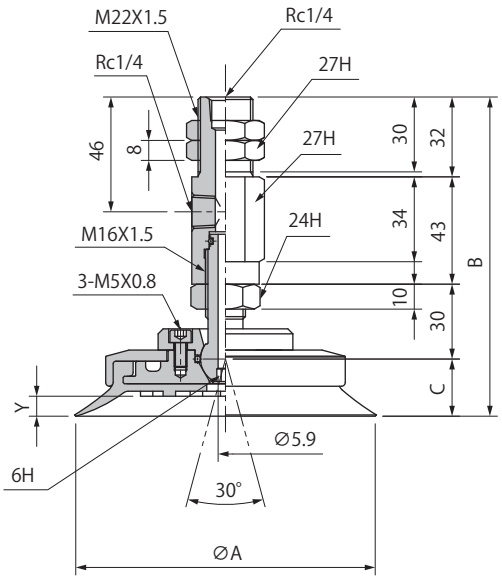

Model number	A	B	C	Y	Weight (g)
PUTKB-120- □	120	128	23	8	963
PUTKB-150- □	150	130	25	10	1170

※□ in the table indicates the cup material.
※ The weight value is when NBR (Nitrile rubber) selected.

Top Port PUTKB-200

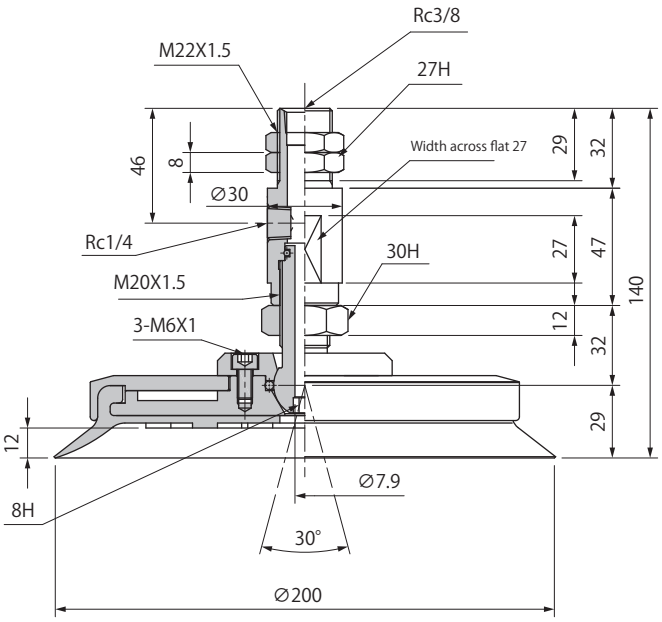

Model number	Weight (g)
PUTKB-200- □	2340

※□ in the table indicates the cup material.
※ The weight value is when NBR (Nitrile rubber) selected.

Side Port PUYKB-10 / 15

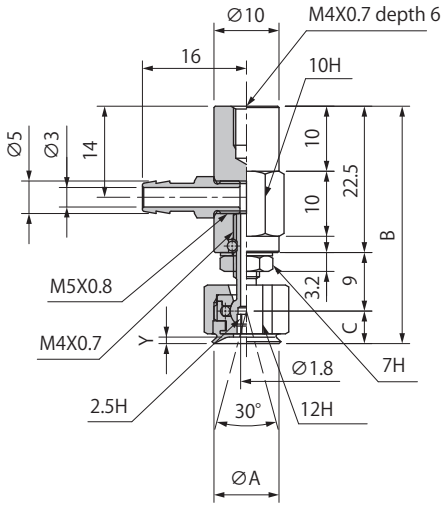

Model number	A	B	C	Y	Weight (g)
PUYKB-10- □	10	36.5	5	1	20
PUYKB-15- □	15	37.5	6	1.4	

※□ in the table indicates the cup material.
※ The weight value is when NBR (Nitrile rubber) selected.

Side Port PUYKB-20 / 25 / 30 / 35

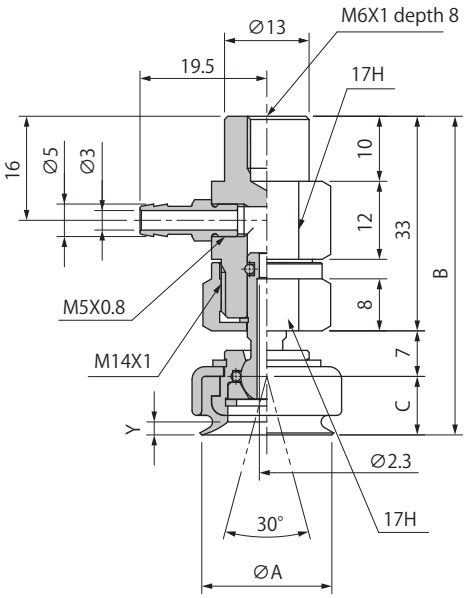

Model number	A	B	C	Y	Weight (g)
PUYKB-20- □	20	49	9	2	67
PUYKB-25- □	25	49.5	9.5	2.5	
PUYKB-30- □	30	50	10	2	73
PUYKB-35- □	35	51	11	3	

※□ in the table indicates the cup material.
※ The weight value is when NBR (Nitrile rubber) selected.

Dimensions

(mm)

Side Port PUYKB-40 / 50

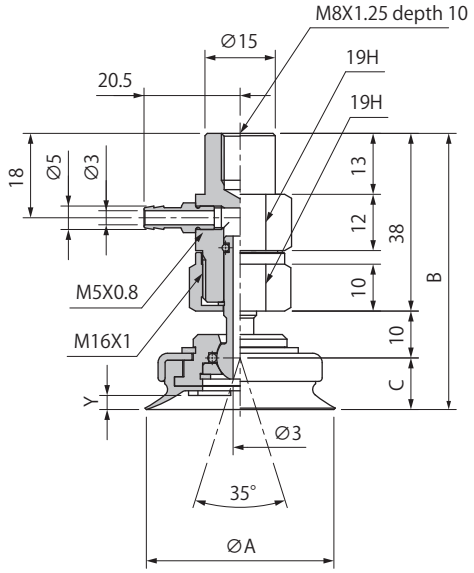

Model number	A	B	C	Y	Weight (g)
PUYKB-40- □	40	59	11	3	116
PUTKB-50- □	50	60	12	4	117

※□ in the table indicates the cup material.
※ The weight value is when NBR（Nitrile rubber）selected.

Side Port PUYKB-60 / 80 / 100

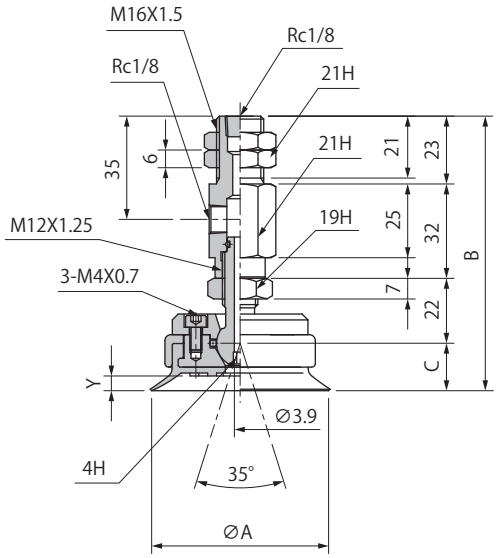

Model number	A	B	C	Y	Weight (g)
PUYKB-60- □	60	93	16	5	352
PUYKB-80- □	80	95	18	6	444
PUYKB-100- □	100				568

※□ in the table indicates the cup material.
※ The weight value is when NBR（Nitrile rubber）selected.

Side Port PUYKB-120 / 150

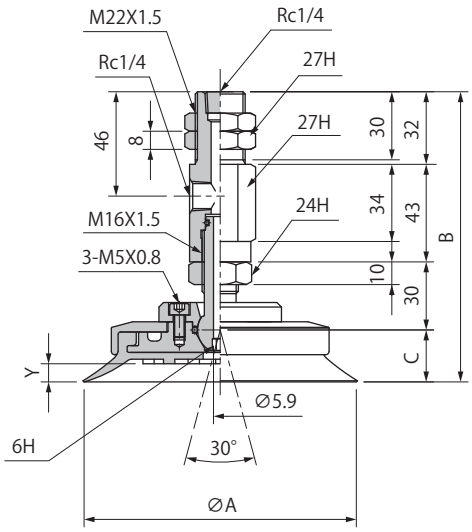

Model number	A	B	C	Y	Weight (g)
PUYKB-120- □	120	128	23	8	963
PUYKB-150- □	150	130	25	10	1170

※□ in the table indicates the cup material.
※ The weight value is when NBR（Nitrile rubber）selected.

Side Port PUYKB-200

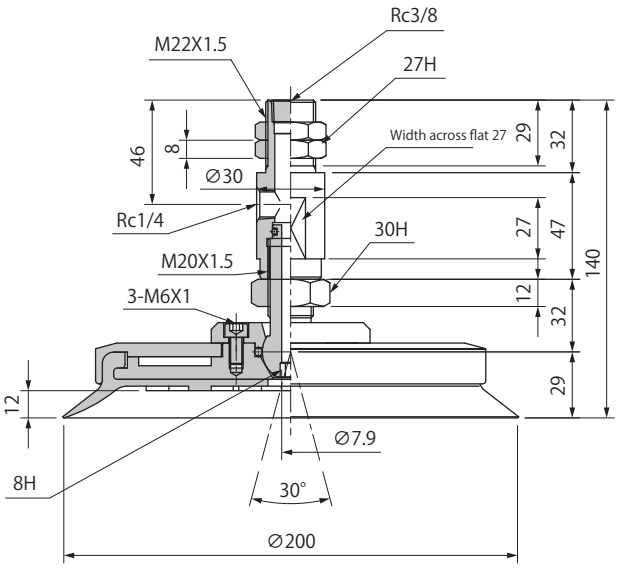

Model number	Weight (g)
PUYKB-200- □	2340

※□ in the table indicates the cup material.
※ The weight value is when NBR（Nitrile rubber）selected.

NAPUTSB•YSB Cup with Spring Fitting

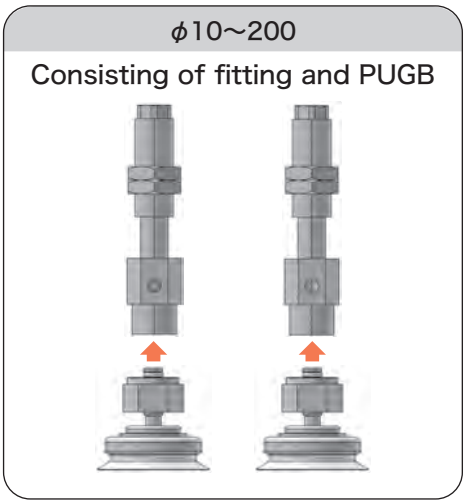

How to Order

NAPU **T** SB – **10-3** – **N** – **T**

① ② ③ ④

① Vacuum port

T	Top
Y	Side

② Cup Size-Stroke (mm)

Symbol	Cup size Stroke	Symbol	Cup size Stroke	Symbol	Cup size Stroke
10-3	ϕ10-3	35-6	ϕ35-6	80-10	ϕ80-10
10-10	ϕ10-10	35-15	ϕ35-15	80-30	ϕ80-30
10-15	ϕ10-15	35-30	ϕ35-30	80-50	ϕ80-50
15-3	ϕ15-3	40-6	ϕ40-6	100-10	ϕ100-10
15-10	ϕ15-10	40-15	ϕ40-15	100-30	ϕ100-30
15-15	ϕ15-15	40-30	ϕ40-30	100-50	ϕ100-50
20-6	ϕ20-6	50-6	ϕ50-6	120-20	ϕ120-20
20-15	ϕ20-15	50-15	ϕ50-15	120-50	ϕ120-50
20-30	ϕ20-30	50-30	ϕ50-30	150-20	ϕ150-20
25-6	ϕ25-6	60-10	ϕ60-10	150-50	ϕ150-50
25-15	ϕ25-15	60-30	ϕ60-30	200-20	ϕ200-20
25-30	ϕ25-30	60-50	ϕ60-50	200-50	ϕ200-50
30-6	ϕ30-6				
30-15	ϕ30-15				
30-30	ϕ30-30				

③ Cup Rubber Material

Symbol	Material
N	NBR(Nitrile rubber)
S	Silicone rubber
U	Urethane rubber
F	Fluorine rubber

※ Please consult with us for other material.

④ Connector

Blank	N/A
T	Barb
O	Push-in

※ϕ 60 or more can not be selected "T" and "O".

Spring Specifications

Cup size	Unit	ϕ10, 15			ϕ20~50			ϕ60~ϕ100			ϕ120-200	
Stroke	mm	3	10	15	6	15	30	10	30	50	20	50
Spring load at 0 stroke	N	0.61		0.64	2.45		2.9	8.82	6.76	8.33	15.6	14.7
Spring load at full stroke	N	0.77	1.17		3.43	4.9	5.88	11.8	15.6	19.6	29.4	

Combination Table

Model number	PUGB model number	Fitting	Piping specifications	
			Without connector・Blank	Barb connector・T / Push-in connector・O
NAPU○SB-10-3-□ (-T/O)	PUGB-10-□	NAPU○SB-10-3-K (-T/O)	M5X0.8 (Female)	ϕ6X4
NAPU○SB-10-10-□ (-T/O)		NAPU○SB-10-10-K (-T/O)		
NAPU○SB-10-15-□ (-T/O)		NAPU○SB-10-15-K (-T/O)		
NAPU○SB-15-3-□ (-T/O)	PUGB-15-□	NAPU○SB-10-3-K (-T/O)		
NAPU○SB-15-10-□ (-T/O)		NAPU○SB-10-10-K (-T/O)		
NAPU○SB-15-15-□ (-T/O)		NAPU○SB-10-15-K (-T/O)		
NAPU○SB-20-6-□ (-T/O)	PUGB-20-□	NAPU○SB-20-6-K (-T/O)		
NAPU○SB-20-15-□ (-T/O)		NAPU○SB-20-15-K (-T/O)		
NAPU○SB-20-30-□ (-T/O)		NAPU○SB-20-30-K (-T/O)		
NAPU○SB-25-6-□ (-T/O)	PUGB-25-□	NAPU○SB-20-6-K (-T/O)		
NAPU○SB-25-15-□ (-T/O)		NAPU○SB-20-15-K (-T/O)		
NAPU○SB-25-30-□ (-T/O)		NAPU○SB-20-30-K (-T/O)		
NAPU○SB-30-6-□ (-T/O)	PUGB-30-□	NAPU○SB-20-6-K (-T/O)		
NAPU○SB-30-15-□ (-T/O)		NAPU○SB-20-15-K (-T/O)		
NAPU○SB-30-30-□ (-T/O)		NAPU○SB-20-30-K (-T/O)		
NAPU○SB-35-6-□ (-T/O)	PUGB-35-□	NAPU○SB-20-6-K (-T/O)		
NAPU○SB-35-15-□ (-T/O)		NAPU○SB-20-15-K (-T/O)		
NAPU○SB-35-30-□ (-T/O)		NAPU○SB-20-30-K (-T/O)		
NAPU○SB-40-6-□ (-T/O)	PUGB-40-□	NAPU○SB-40-6-K (-T/O)		
NAPU○SB-40-15-□ (-T/O)		NAPU○SB-40-15-K (-T/O)		
NAPU○SB-40-30-□ (-T/O)		NAPU○SB-40-30-K (-T/O)		
NAPU○SB-50-6-□ (-T/O)	PUGB-50-□	NAPU○SB-40-6-K (-T/O)		
NAPU○SB-50-15-□ (-T/O)		NAPU○SB-40-15-K (-T/O)		
NAPU○SB-50-30-□ (-T/O)		NAPU○SB-40-30-K (-T/O)		
NAPU○SB-60-10-□	PUGB-60-□	NAPU○SB-60-10-K	Rc1/8 (Female)	-
NAPU○SB-60-30-□		NAPU○SB-60-30-K		
NAPU○SB-60-50-□		NAPU○SB-60-50-K		
NAPU○SB-80-10-□	PUGB-80-□	NAPU○SB-60-10-K		
NAPU○SB-80-30-□		NAPU○SB-60-30-K		
NAPU○SB-80-50-□		NAPU○SB-60-50-K		
NAPU○SB-100-10-□	PUGB-100-□	NAPU○SB-60-10-K		
NAPU○SB-100-30-□		NAPU○SB-60-30-K		
NAPU○SB-100-50-□		NAPU○SB-60-50-K		
NAPU○SB-120-20-□	PUGB-120-□	NAPU○SB-120-20-K	Rc1/4 (Female)	-
NAPU○SB-120-50-□		NAPU○SB-120-50-K		
NAPU○SB-150-20-□	PUGB-150-□	NAPU○SB-120-20-K		
NAPU○SB-150-50-□		NAPU○SB-120-50-K		
NAPU○SB-200-20-□	PUGB-200-□	NAPU○SB-200-20-K		
NAPU○SB-200-50-□		NAPU○SB-200-50-K		

※□ in the table indicates the cup material.
※○ in the table indicates the vacuum port (T or Y).

02 Suction Cup
PA
PB
PC
PCD
PD
PF
PFO
PH
PJ
CORE
PK2
PK2B
PK2L
PL
PN
PN-B
PP
PQ
PR
PU
PW
RA
SM
TN

NAPUTSB•YSB Cup with Spring Fitting

Dimensions

(mm)

NAPUT/YSB-10

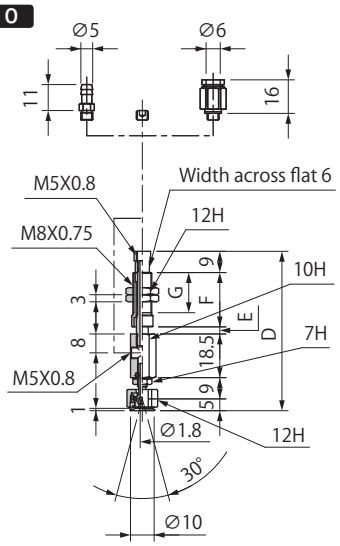

Model number	D	E	F	G	Weight (g)
NAPUT/YSB-10-3-□ (-T/O)	67.5	3	23	17	25
NAPUT/YSB-10-10-□ (-T/O)	74.5	10			25.5
NAPUT/YSB-10-15-□ (-T/O)	87	15	30.5	24.5	28

※□ in the table indicates the cup material.
※ The weight value is when NBR（Nitrile rubber）/ without connector selected.

NAPUT/YSB-15

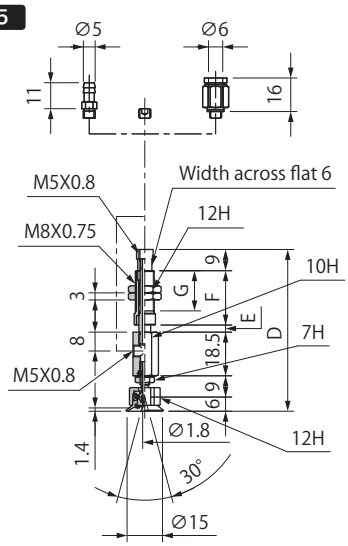

Model number	D	E	F	G	Weight (g)
NAPUT/YSB-15-3-□ (-T/O)	68.5	3	23	17	25
NAPUT/YSB-15-10-□ (-T/O)	75.5	10			25.5
NAPUT/YSB-15-15-□ (-T/O)	88	15	30.5	24.5	28

※□ in the table indicates the cup material.
※ The weight value is when NBR（Nitrile rubber）/ without connector selected.

NAPUT/YSB-20

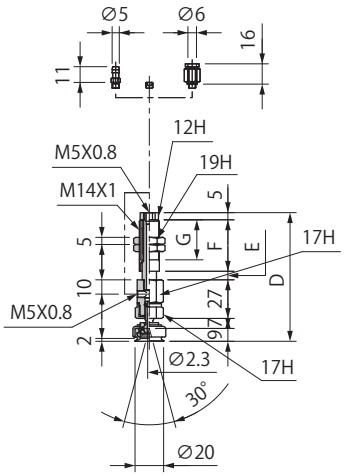

Model number	D	E	F	G	Weight (g)
NAPUT/YSB-20-6-□ (-T/O)	90	6	36	28	88.5
NAPUT/YSB-20-15-□ (-T/O)	99	15			93.5
NAPUT/YSB-20-30-□ (-T/O)	136	30	58	50	118.5

※□ in the table indicates the cup material.
※ The weight value is when NBR（Nitrile rubber）/ without connector selected.

NAPUT/YSB-25

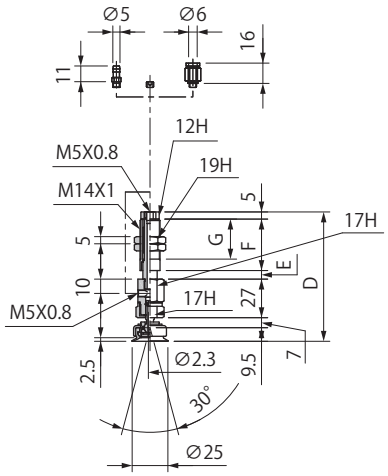

Model number	D	E	F	G	Weight (g)
NAPUT/YSB-25-6-□ (-T/O)	90.5	6	36	28	88.5
NAPUT/YSB-25-15-□ (-T/O)	99.5	15			93.5
NAPUT/YSB-25-30-□ (-T/O)	136.5	30	58	50	118.5

※□ in the table indicates the cup material.
※ The weight value is when NBR（Nitrile rubber）/ without connector selected.

Common Specifications

Connector Weight(g)

Symbol	Tube O.D ϕ 4	Tube O.D ϕ 6
T	0.5	1.5
O	3.0	4.0

Dimensions

(mm)

NAPUT/YSB-30

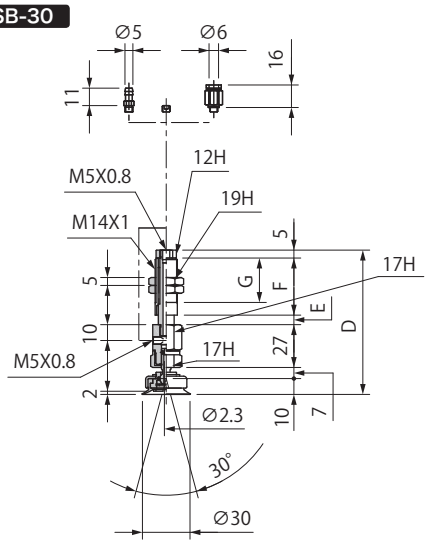

Model number	D	E	F	G	Weight (g)
NAPUT/YSB-30-6-□ (-T/O)	91	6	36	28	93.5
NAPUT/YSB-30-15-□ (-T/O)	100	15			98.5
NAPUT/YSB-30-30-□ (-T/O)	137	30	58	50	123.5

※□ in the table indicates the cup material.
※ The weight value is when NBR（Nitrile rubber）/ without connector selected.

NAPUT/YSB-35

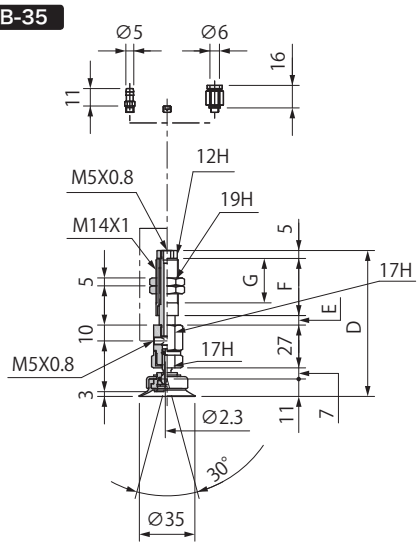

Model number	D	E	F	G	Weight (g)
NAPUT/YSB-35-6-□ (-T/O)	92	6	36	28	94
NAPUT/YSB-35-15-□ (-T/O)	101	15			99
NAPUT/YSB-35-30-□ (-T/O)	138	30	58	50	124

※□ in the table indicates the cup material.
※ The weight value is when NBR（Nitrile rubber）/ without connector selected.

NAPUT/YSB-40

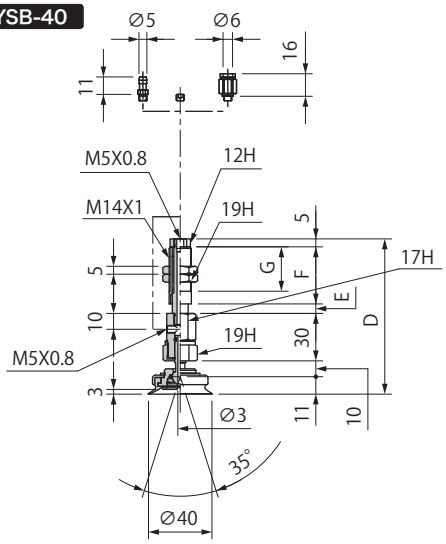

Model number	D	E	F	G	Weight (g)
NAPUT/YSB-40-6-□ (-T/O)	98	6	36	28	123
NAPUT/YSB-40-15-□ (-T/O)	107	15			128
NAPUT/YSB-40-30-□ (-T/O)	144	30	58	50	153

※□ in the table indicates the cup material.
※ The weight value is when NBR（Nitrile rubber）/ without connector selected.

NAPUT/YSB-50

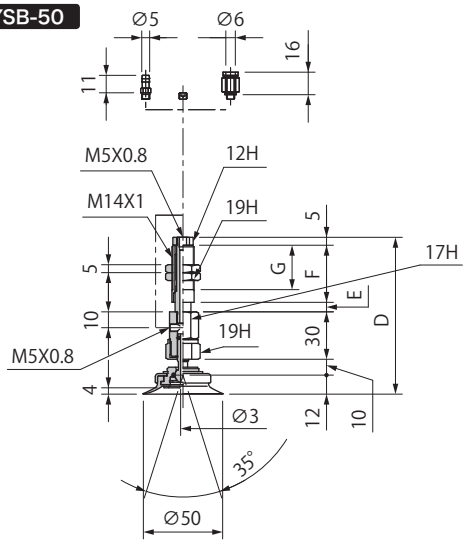

Model number	D	E	F	G	Weight (g)
NAPUT/YSB-50-6-□ (-T/O)	99	6	36	28	124
NAPUT/YSB-50-15-□ (-T/O)	108	15			129
NAPUT/YSB-50-30-□ (-T/O)	145	30	58	50	154

※□ in the table indicates the cup material.
※ The weight value is when NBR（Nitrile rubber）/ without connector selected.

Common Specifications

Connector Weight(g)

Symbol	Tube O.D ϕ 4	Tube O.D ϕ 6
T	0.5	1.5
O	3.0	4.0

NAPUTSB•YSB Cup with Spring Fitting

Dimensions

(mm)

NAPUT/YSB-60

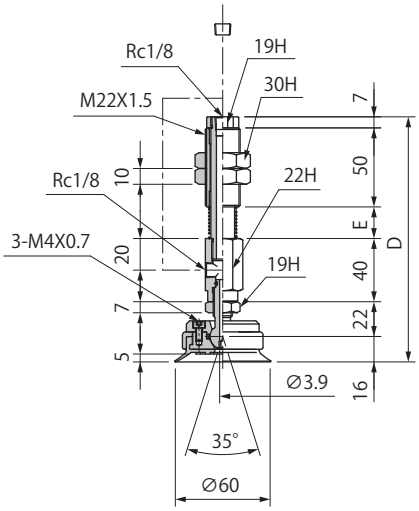

Model number	D	E	Weight (g)
NAPUT/YSB-60-10-□	155	20	487
NAPUT/YSB-60-30-□	185	50	521
NAPUT/YSB-60-50-□	210	75	548

※□ in the table indicates the cup material.
※ The weight value is when NBR (Nitrile rubber) selected.

NAPUT/YSB-80

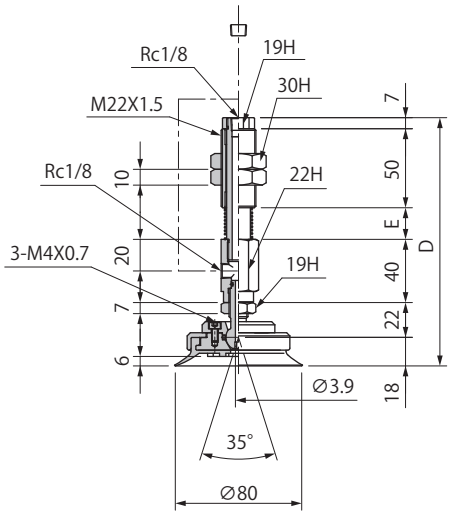

Model number	D	E	Weight (g)
NAPUT/YSB-80-10-□	157	20	559
NAPUT/YSB-80-30-□	187	50	593
NAPUT/YSB-80-50-□	212	75	620

※□ in the table indicates the cup material.
※ The weight value is when NBR (Nitrile rubber) selected.

NAPUT/YSB-100

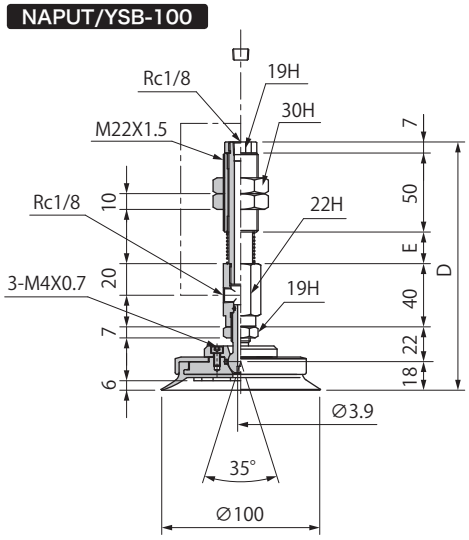

Model number	D	E	Weight (g)
NAPUT/YSB-100-10-□	157	20	695
NAPUT/YSB-100-30-□	187	50	729
NAPUT/YSB-100-50-□	212	75	756

※□ in the table indicates the cup material.
※ The weight value is when NBR (Nitrile rubber) selected.

Dimensions

(mm)

NAPUT/YSB-120

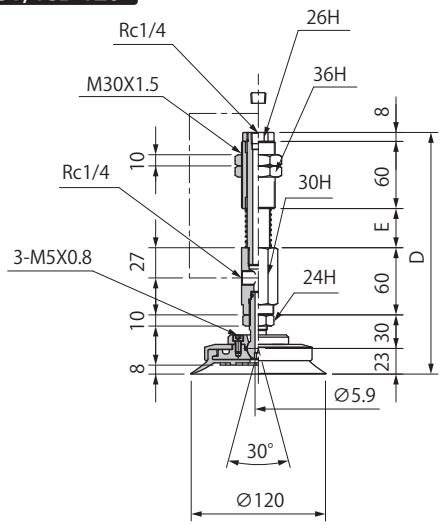

Model number	D	E	Weight (g)
NAPUT/YSB-120-20-□	216	35	1414
NAPUT/YSB-120-50-□	256	75	1495

※□ in the table indicates the cup material.
※ The weight value is when NBR（Nitrile rubber）selected.

NAPUT/YSB-150

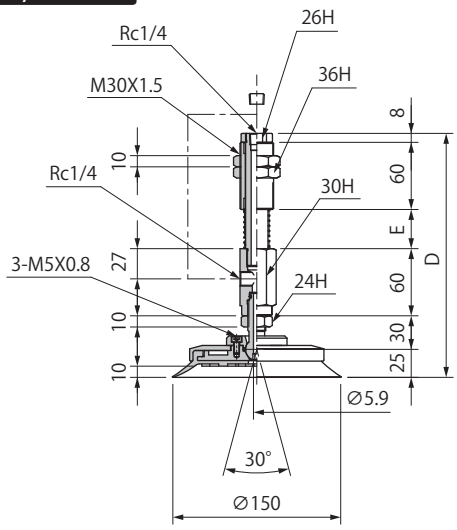

Model number	D	E	Weight (g)
NAPUT/YSB-150-20-□	218	35	1640
NAPUT/YSB-150-50-□	258	75	1721

※□ in the table indicates the cup material.
※ The weight value is when NBR（Nitrile rubber）selected.

NAPUT/YSB-200

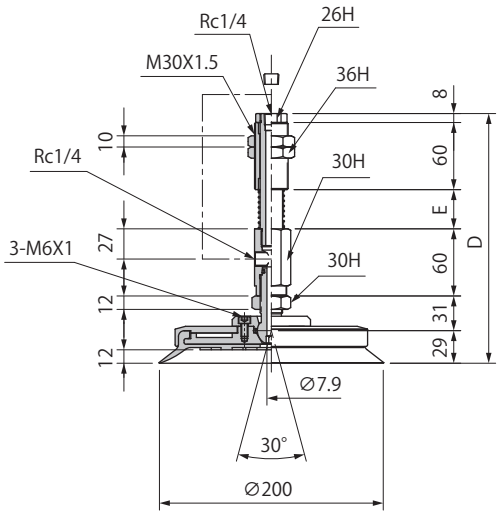

Model number	D	E	Weight (g)
NAPUT/YSB-200-20-□	223	35	2780
NAPUT/YSB-200-50-□	263	75	2861

※□ in the table indicates the cup material.
※ The weight value is when NBR（Nitrile rubber）selected.

NAPUTSBR•YSBR Cup with Spring Fitting with Horizontal Level Retention Function

ϕ60~200

Consisting of fitting and PUGB

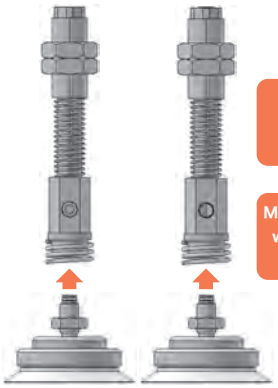

Because the spring is built-in fitting, It is always held horizontal level between fitting and cup

Most suitable for handling the workpiece with oblique surface and must be keep horiaontal lebel during handling.

How to Order

NAPU **T** SBR – **60-10** – **N**

① ② ③

① Vacuum port

T	Top
Y	Side

② Cup Size-Stroke (mm)

Symbol	Cup size Stroke	Symbol	Cup size Stroke
60-10	ϕ60-10	120-20	ϕ120-20
60-30	ϕ60-30	120-50	ϕ120-50
60-50	ϕ60-50	150-20	ϕ150-20
80-10	ϕ80-10	150-50	ϕ150-50
80-30	ϕ80-30	200-20	ϕ200-20
80-50	ϕ80-50	200-50	ϕ200-50
100-10	ϕ100-10		
100-30	ϕ100-30		
100-50	ϕ100-50		

③ Cup Rubber Material

Symbol	Material
N	NBR(Nitrile rubber)
S	Silicone rubber
U	Urethane rubber
F	Fluorine rubber

※ Please consult with us for other material.

Spring Specifications

Cup size	Unit	ϕ60~100			ϕ120~200	
Stroke	mm	10	30	50	20	50
Spring load at 0 stroke	N	8.82	6.76	8.33	15.6	14.7
Spring load at full stroke	N	11.8	15.6	19.6	29.4	

Combination Table

Model number	PUGB model number	Fitting	Piping specifications
NAPU○SBR-60-10-□	PUGB-60-□	NAPU○SBR-60-10-K	Rc1/8 (Female)
NAPU○SBR-60-30-□		NAPU○SBR-60-30-K	
NAPU○SBR-60-50-□		NAPU○SBR-60-50-K	
NAPU○SBR-80-10-□	PUGB-80-□	NAPU○SBR-60-10-K	
NAPU○SBR-80-30-□		NAPU○SBR-60-30-K	
NAPU○SBR-80-50-□		NAPU○SBR-60-50-K	
NAPU○SBR-100-10-□	PUGB-100-□	NAPU○SBR-60-10-K	
NAPU○SBR-100-30-□		NAPU○SBR-60-30-K	
NAPU○SBR-100-50-□		NAPU○SBR-60-50-K	
NAPU○SBR-120-20-□	PUGB-120-□	NAPU○SBR-120-20-K	Rc1/4 (Female)
NAPU○SBR-120-50-□		NAPU○SBR-120-50-K	
NAPU○SBR-150-20-□	PUGB-150-□	NAPU○SBR-120-20-K	
NAPU○SBR-150-50-□		NAPU○SBR-120-50-K	
NAPU○SBR-200-20-□	PUGB-200-□	NAPU○SBR-200-20-K	
NAPU○SBR-200-50-□		NAPU○SBR-200-50-K	

※□ in the table indicates the cup material.
※○ in the table indicates the vacuum port (T or Y).

NAPUTSBR•YSBR Cup with Spring Fitting with Horizontal Level Retention Function

Dimensions

(mm)

NAPUT/YSBR-60

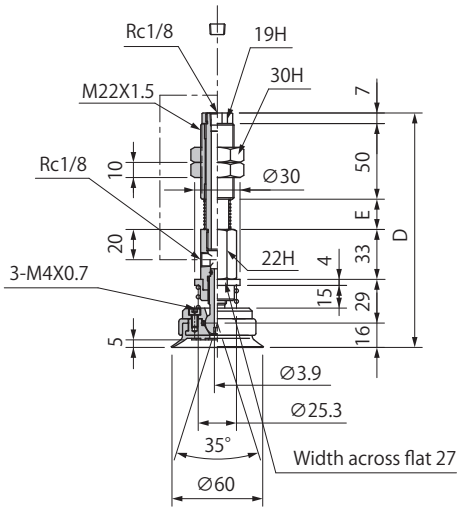

Model number	D	E	Weight (g)
NAPUT/YSBR-60-10-□	155	20	507
NAPUT/YSBR-60-30-□	185	50	541
NAPUT/YSBR-60-50-□	210	75	568

※□ in the table indicates the cup material.
※ The weight value is when NBR (Nitrile rubber) selected.

NAPUT/YSBR-80

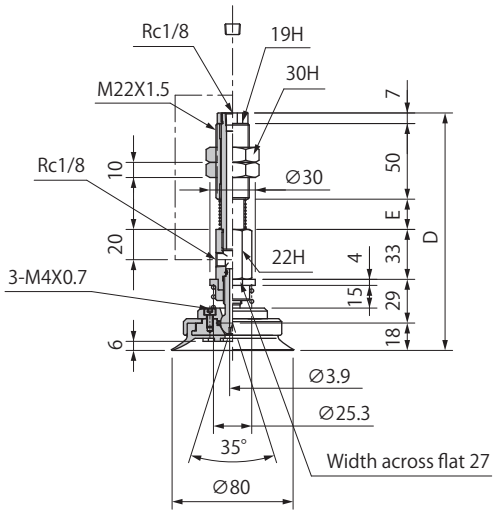

Model number	D	E	Weight (g)
NAPUT/YSBR-80-10-□	157	20	579
NAPUT/YSBR-80-30-□	187	50	613
NAPUT/YSBR-80-50-□	212	75	640

※□ in the table indicates the cup material.
※ The weight value is when NBR (Nitrile rubber) selected.

NAPUT/YSBR-100

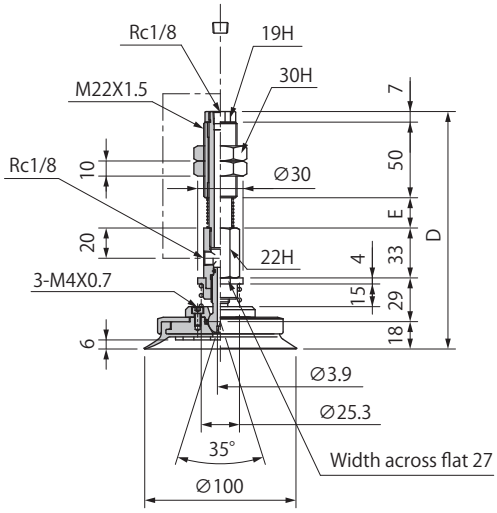

Model number	D	E	Weight (g)
NAPUT/YSB-100-10-□	157	20	715
NAPUT/YSB-100-30-□	187	50	749
NAPUT/YSB-100-50-□	212	75	776

※□ in the table indicates the cup material.
※ The weight value is when NBR (Nitrile rubber) selected.

Dimensions

(mm)

NAPUT/YSBR-120

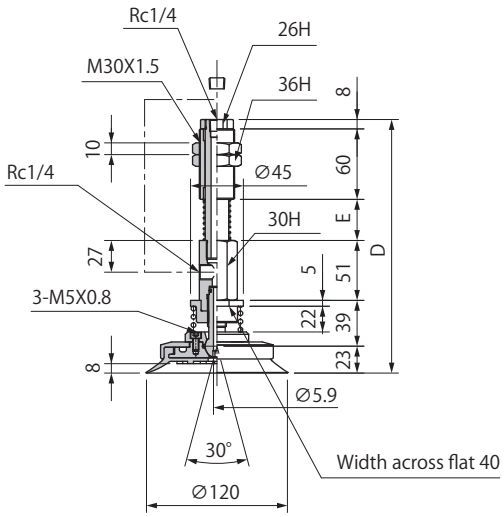

Model number	D	E	Weight (g)
NAPUT/YSBR-120-20-□	216	35	1495
NAPUT/YSBR-120-50-□	256	75	1575

※□ in the table indicates the cup material.
※ The weight value is when NBR（Nitrile rubber）selected.

NAPUT/YSBR-150

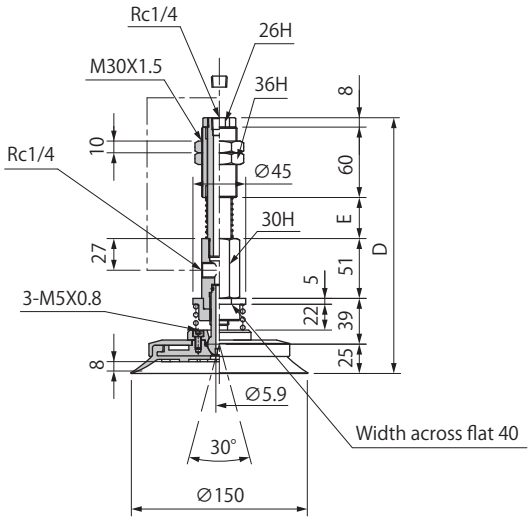

Model number	D	E	Weight (g)
NAPUT/YSBR-150-20-□	218	35	1720
NAPUT/YSBR-150-50-□	258	75	1801

※□ in the table indicates the cup material.
※ The weight value is when NBR（Nitrile rubber）selected.

NAPUT/YSBR-200

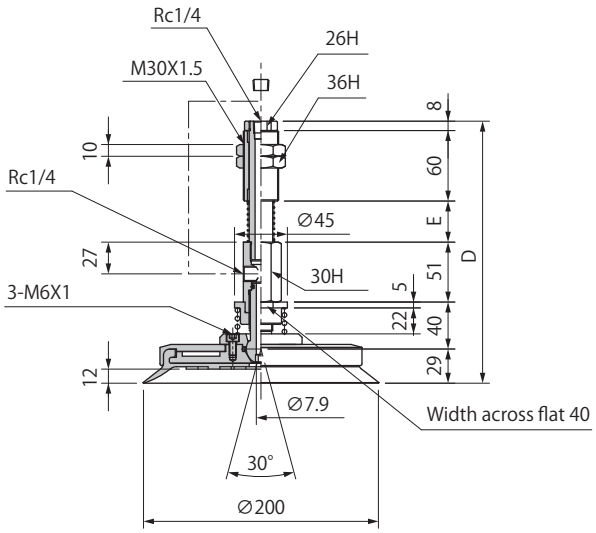

Model number	D	E	Weight (g)
NAPUT/YSBR-200-20-□	223	35	2860
NAPUT/YSBR-200-50-□	263	75	2941

※□ in the table indicates the cup material.
※ The weight value is when NBR（Nitrile rubber）selected.

PW Series

Oval Cup

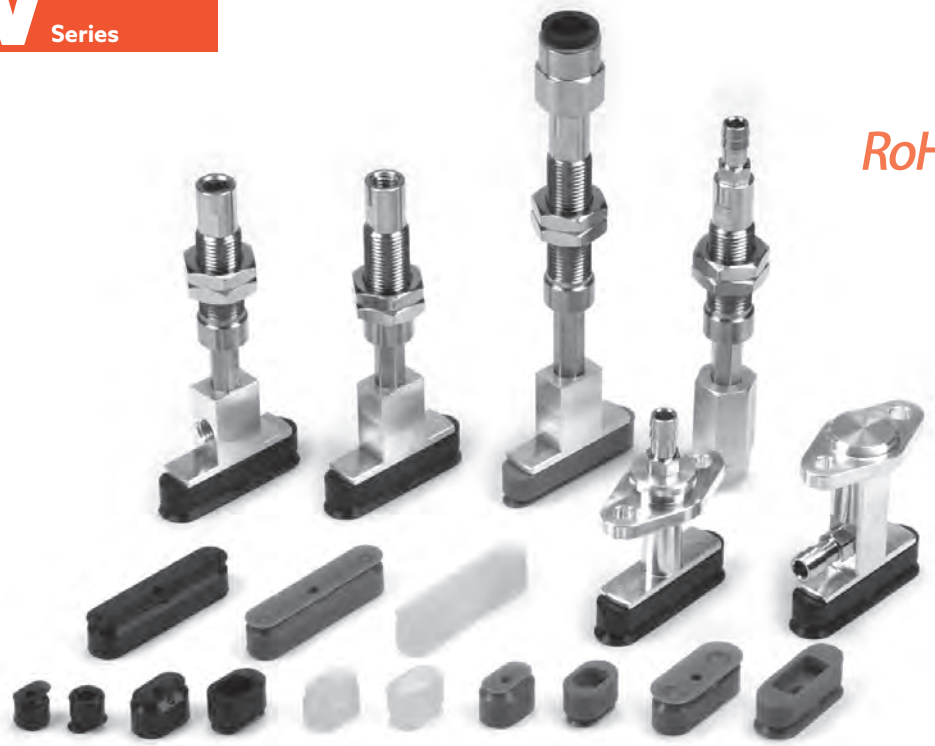

RoHS

Suction cup with long and round shape
Where gripping space is limited and when lifting force is desired!

Syringe

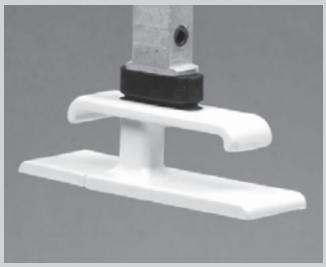

Hook

Ballpoint pen

Wide range of cup sizes.

3.5×7	4×10	4×20	4×30	5×10	5×20
5×30	6×10	6×20	6×30	8×20	8×30

Various fittings for many kinds of applications.

Fixed fitting

Spring fitting

02 Suction Cup
PA
PB
PC
PCD
PD
PF
PFO
PH
PJ
CORE
PK2
PK2B
PK2L
PL
PN
PN-B
PP
PQ
PR
PU
PW
RA
SM
TN

Suction Cup

PWG	Cup size (mm) 3.5X7 ~ 8X30		P.485

Fitting

Type	Applicable cup size (mm)	Stroke (mm)	Vacuum port	Piping・Connector	Page
Cup with fixed fitting PWTK	3.5X7 ~ 8X30	N/A	Top	Barb	P.489
Cup with fixed fitting PWYK	3.5X7 ~ 8X30	N/A	Side	Barb	P.489
Cup with non-rotation spring fitting NAPWTH	4X10 ~ 8X30	3, 10, 15	Top	Female screw Push-in Barb	P.493
Cup with non-rotation spring fitting NAPWYH	4X10 ~ 8X30	3, 10, 15	Side	Female screw Push-in Barb	P.493

Suction Cup Selection Guide ••→ P.163

PWG Oval Cup

How to Order

PWG – 3.5X7 – N

① ②

① Cup Size
(Short diameter X long diameter) mm

3.5X7	5X30
4X10	6X10
4X20	6X20
4X30	6X30
5X10	8X20
5X20	8X30

② Cup Rubber Material

Symbol	Material
N	NBR(Nitrile rubber)
S	Silicone rubber
U	Urethane rubber

※ Please consult with us for other material.

Cup Rubber Material Standard Specifications

Symbol	Material	Hardness (A/s)	Ambient temperature (℃)	Color
N	NBR (Nitrile rubber)	55	-26～120	Black
S	Silicone rubber	55	-60～250	Translucent white
U	Urethane rubber	55	-20～75	Blue

Applicable Rubber Material Table

Material	Color	Symbol	Oval type											
			3.5X7	4X10	4X20	4X30	5X10	5X20	5X30	6X10	6X20	6X30	8X20	8X30
NBR (Nitrile rubber)	Black	N	●	●	●	●	●	●	●	●	●	●	●	●
Silicone rubber	Translucent white	S	●	●	●	●	●	●	●	●	●	●	●	●
Urethane rubber	Blue	U	●	●	●	●	●	●	●	●	●	●	●	●

●: In stock ○Made to order ×: None
※Please consult with us for other material.

Dimensions

(mm)

PWG-3.5X7

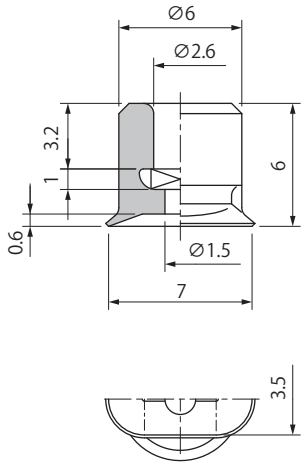

PWG-4X10

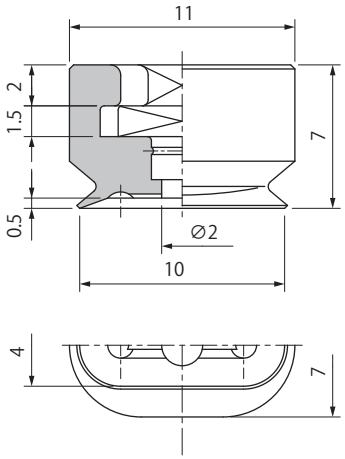

PWG-4X20

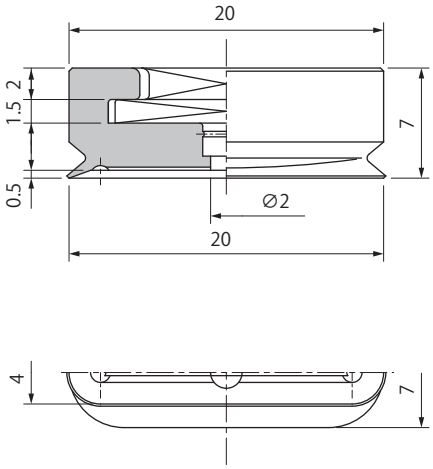

PWG-4X30

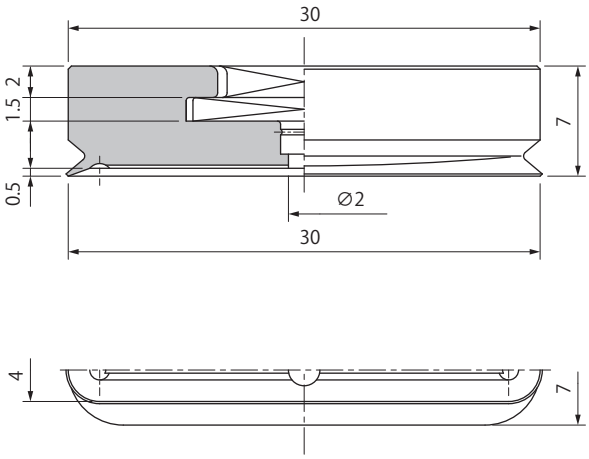

Weight

(g)

Model ＼ Material	N	S	U
PWG-3.5X7	0.2	0.2	0.2
PWG-4X10	0.4	0.4	0.4
PWG-4X20	0.7	0.7	0.7
PWG-4X30	1.2	1.2	1.3

Symbol	Material
N	NBR(Nitrile rubber)
S	Silicone rubber
U	Urethane rubber

02 Suction Cup
PA
PB
PC
PCD
PD
PF
PFO
PH
PJ
CORE
PK2
PK2B
PK2L
PL
PN
PN-B
PP
PQ
PR
PU
PW
RA
SM
TN

PWG Oval Cup

Dimensions

(mm)

PWG-5X10

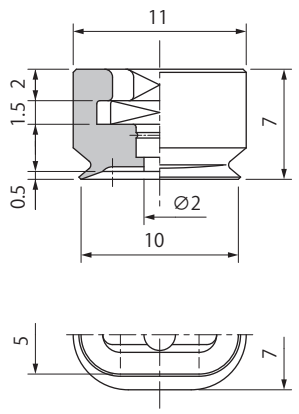

PWG-5X20

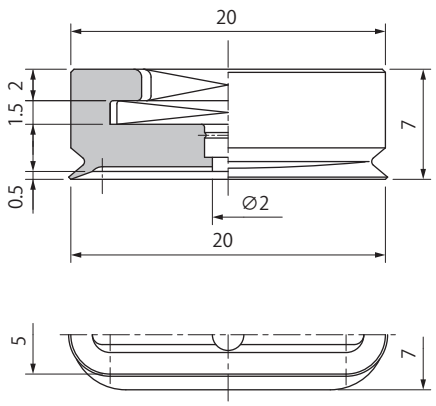

PWG-5X30

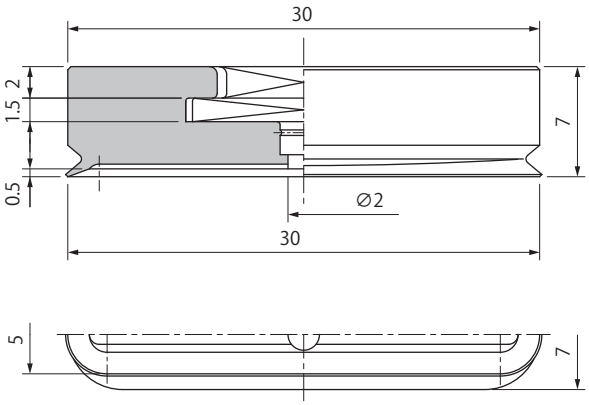

PWG-6X10

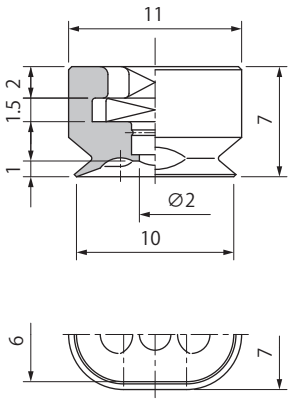

Weight

(g)

Model ＼ Material	N	S	U
PWG-5X10	0.4	0.4	0.4
PWG-5X20	0.7	0.7	0.7
PWG-5X30	1.2	1.2	1.3
PWG-6X10	0.4	0.4	0.4

Symbol	Material
N	NBR(Nitrile rubber)
S	Silicone rubber
U	Urethane rubber

Dimensions

(mm)

PWG-6X20

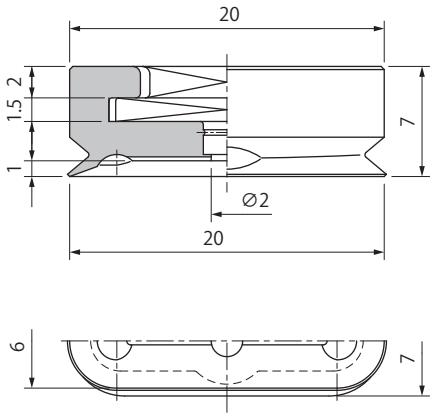

PWG-6X30

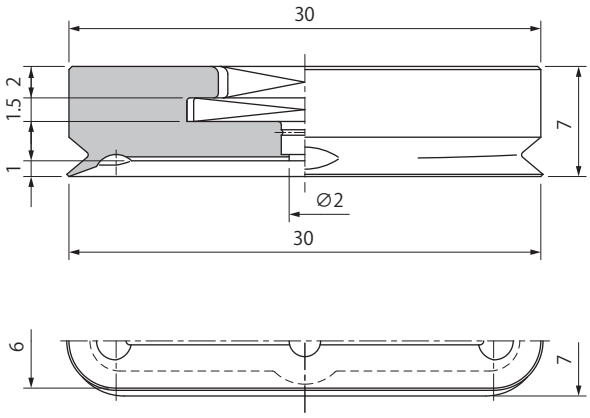

PWG-8X20

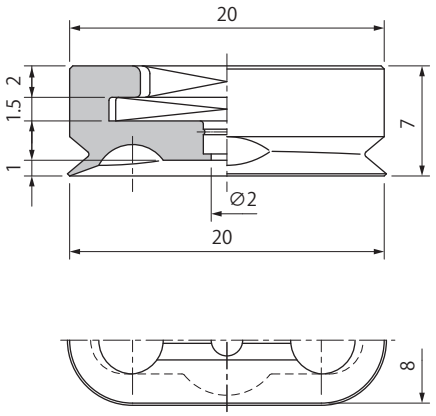

PWG-8X30

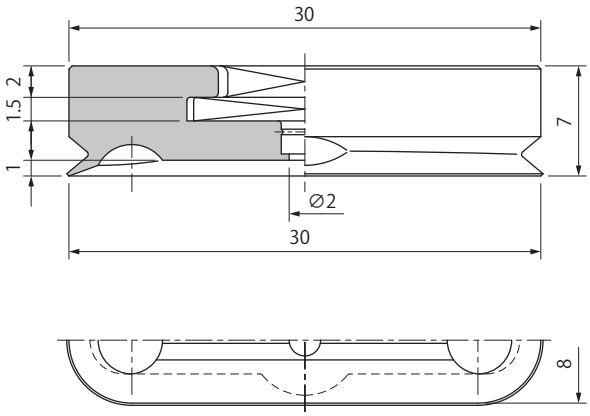

Weight

(g)

Model ＼ Material	N	S	U
PWG-6X20	0.7	0.7	0.7
PWG-6X30	1.1	1.1	1.2
PWG-8X20	0.7	0.7	0.7
PWG-8X30	1.1	1.1	1.2

Symbol	Material
N	NBR(Nitrile rubber)
S	Silicone rubber
U	Urethane rubber

PWTK·YK Cup with Fixed Fitting

Consisting of fitting and suction cup.

3.5X7~8X30

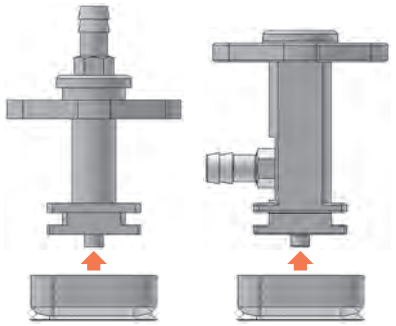

Attach the cup directly to the fitting

How to Order

PW T K – 3.5X7 – N

① ② ③

① Vacuum Port

T	Top
Y	Side

② Cup Size
(Short diameter X long diameter) mm

3.5X7	5X30
4X10	6X10
4X20	6X20
4X30	6X30
5X10	8X20
5X20	8X30

③ Cup Rubber Material

Symbol	Material
N	NBR (Nitrile rubber)
S	Silicone rubber
U	Urethane rubber

※ Please consult with us for other material.

Combination Table

Top Port

Model number	Cup	Fitting	Piping specifications	
PWTK-3.5X7- □	PWG-3.5X7- □	PWTK-3.5X7-K	Barb	ϕ6 X 4
PWTK-4X10- □	PWG-4X10- □	PWTK-4X10-K		
PWTK-4X20- □	PWG-4X20- □	PWTK-4X20-K		
PWTK-4X30- □	PWG-4X30- □	PWTK-4X30-K		
PWTK-5X10- □	PWG-5X10- □	PWTK-4X10-K		
PWTK-5X20- □	PWG-5X20- □	PWTK-4X20-K		
PWTK-5X30- □	PWG-5X30- □	PWTK-4X30-K		
PWTK-6X10- □	PWG-6X10- □	PWTK-4X10-K		
PWTK-6X20- □	PWG-6X20- □	PWTK-4X20-K		
PWTK-6X30- □	PWG-6X30- □	PWTK-4X30-K		
PWTK-8X20- □	PWG-8X20- □	PWTK-4X20-K		
PWTK-8X30- □	PWG-8X30- □	PWTK-4X30-K		

※□ in the table indicates the cup material.

Side Port

Model number	Cup	Fitting	Piping specifications	
PWYK-3.5X7- □	PWG-3.5X7- □	PWYK-3.5X7-K	Barb	ϕ6 X 4
PWYK-4X10- □	PWG-4X10- □	PWYK-4X10-K		
PWYK-4X20- □	PWG-4X20- □	PWYK-4X20-K		
PWYK-4X30- □	PWG-4X30- □	PWYK-4X30-K		
PWYK-5X10- □	PWG-5X10- □	PWYK-4X10-K		
PWYK-5X20- □	PWG-5X20- □	PWYK-4X20-K		
PWYK-5X30- □	PWG-5X30- □	PWYK-4X30-K		
PWYK-6X10- □	PWG-6X10- □	PWYK-4X10-K		
PWYK-6X20- □	PWG-6X20- □	PWYK-4X20-K		
PWYK-6X30- □	PWG-6X30- □	PWYK-4X30-K		
PWYK-8X20- □	PWG-8X20- □	PWYK-4X20-K		
PWYK-8X30- □	PWG-8X30- □	PWYK-4X30-K		

※□ in the table indicates the cup material.

PWTK•YK Cup with Fixed Fitting

Dimensions

(mm)

Top Port PWTK-3.5X7

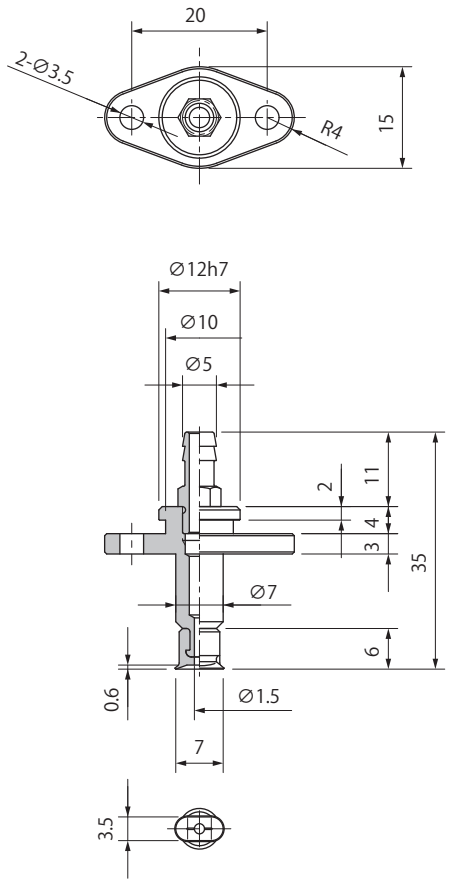

Top Port PWTK-4X10～8X30

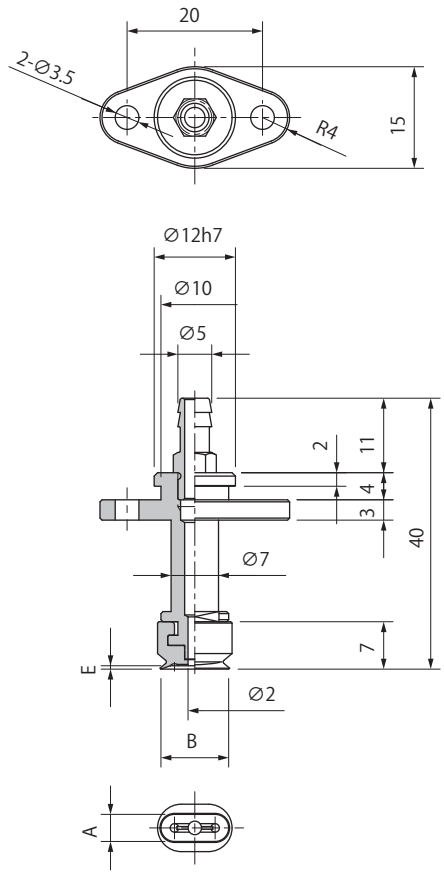

Model number	Weight (g)
PWTK-3.5X7- □	6

※□ in the table indicates the cup material.
※ The weight value is when NBR（Nitrile rubber）selected.

Model number	A	B	E	Weight (g)
PWTK-4X10- □	4	10	0.5	7
PWTK-4X20- □		20		
PWTK-4X30- □		30		8
PWTK-5X10- □	5	10		7
PWTK-5X20- □		20		
PWTK-5X30- □		30		8
PWTK-6X10- □	6	10	1	7
PWTK-6X20- □		20		
PWTK-6X30- □		30		8
PWTK-8X20- □	8	20		7
PWTK-8X30- □		30		8

※□ in the table indicates the cup material.
※ The weight value is when NBR（Nitrile rubber）selected.

Dimensions

(mm)

Side Port PWYK-3.5X7

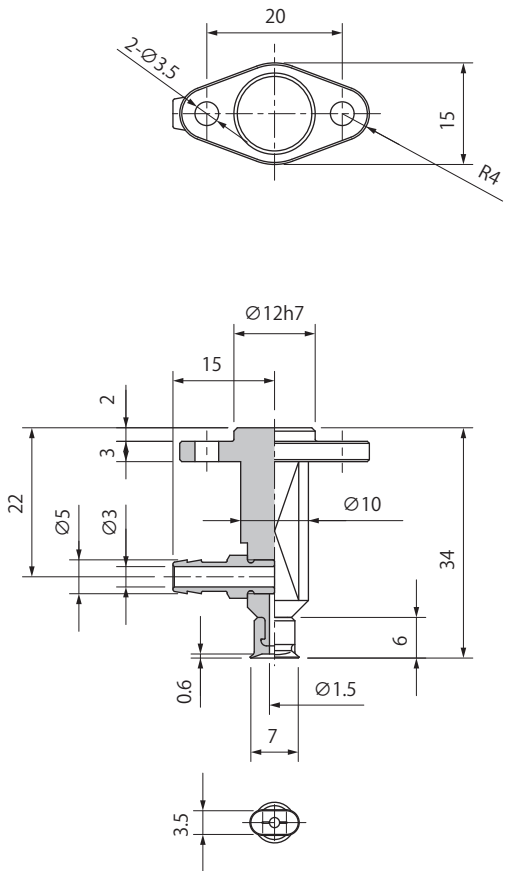

Model number	Weight (g)
PWYK-3.5X7- □	8

※□ in the table indicates the cup material.
※ The weight value is when NBR（Nitrile rubber）selected.

Side Port PWYK-4X10～8X30

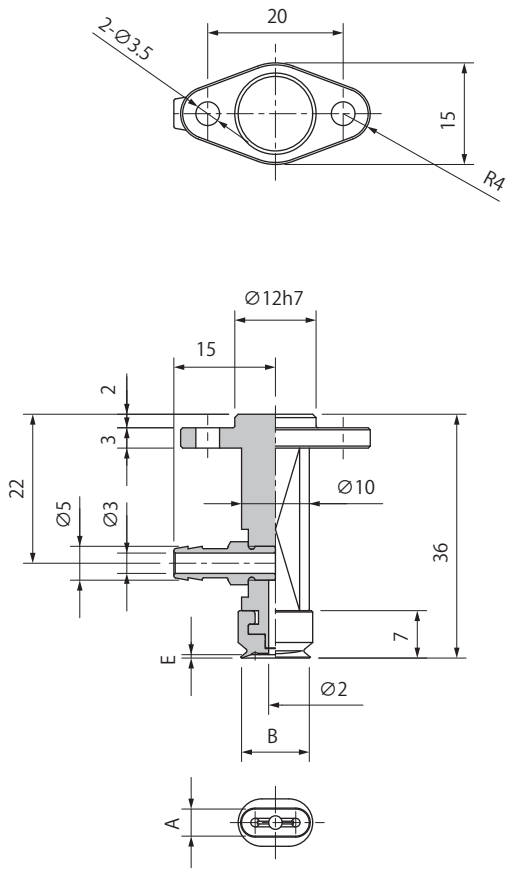

Model number	A	B	E	Weight (g)
PWYK-4X10- □	4	10	0.5	9
PWYK-4X20- □		20		
PWYK-4X30- □		30		10
PWYK-5X10- □	5	10		9
PWYK-5X20- □		20		
PWYK-5X30- □		30		10
PWYK-6X10- □	6	10	1	9
PWYK-6X20- □		20		
PWYK-6X30- □		30		10
PWYK-8X20- □	8	20		9
PWYK-8X30- □		30		10

※□ in the table indicates the cup material.
※ The weight value is when NBR（Nitrile rubber）selected.

NAPWTH•YH Cup with Non-rotation Spring Fitting

Consisting of fitting and suction cup.

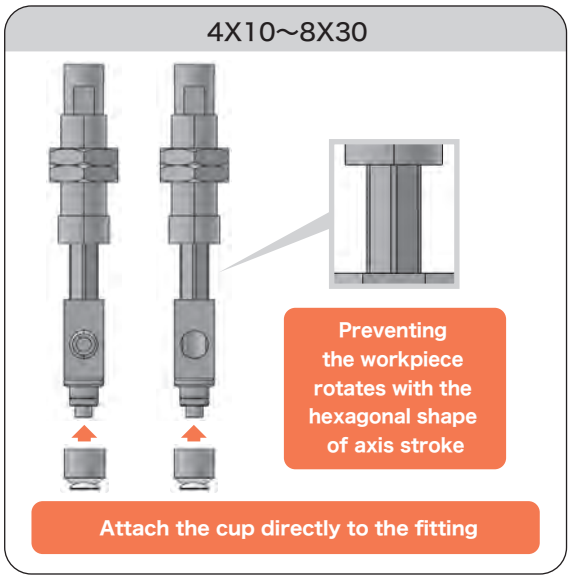

How to Order

NAPW **T** H – **4X10-3** – **N** – **T**

① ② ③ ④

① Vacuum Port

T	Top
Y	Side

② Cup Size (short diameter X long diameter) mm

4X10-3	5X20-3	6X30-3
4X10-10	5X20-10	6X30-10
4X10-15	5X20-15	6X30-15
4X20-3	5X30-3	8X20-3
4X20-10	5X30-10	8X20-10
4X20-15	5X30-15	8X20-15
4X30-3	6X10-3	8X30-3
4X30-10	6X10-10	8X30-10
4X30-15	6X10-15	8X30-15
5X10-3	6X20-3	
5X10-10	6X20-10	
5X10-15	6X20-15	

③ Cup Rubber Material

Symbol	Material
N	NBR(Nitrile rubber)
S	Silicone rubber
U	Urethane rubber

※ Please consult with us for other material.

④ Connector

Blank	N/A
T	Barb
O	Push-in

Spring Specifications

Cup size	Unit	4X10~8X30		
Stroke	mm	3	10	15
Spring load at 0 stroke	N	0.61		0.64
Spring load at full stroke	N	0.77	1.17	

Combination Table

Model number	Cup	Setting screw	Fitting	Piping specifications	
				Without connector・Blank	Barb connector・T / Push-in connector・O
NAPW○H-4X10-3-□ (-T/O)	PWG-4X10-□	Attach the cup directly to the fitting	NAPW○H-4X10-3-K (-T/O)	M5X0.8 (Female)	ϕ 6 X 4
NAPW○H-4X10-10-□ (-T/O)			NAPW○H-4X10-10-K (-T/O)		
NAPW○H-4X10-15-□ (-T/O)			NAPW○H-4X10-15-K (-T/O)		
NAPW○H-4X20-3-□ (-T/O)	PWG-4X20-□		NAPW○H-4X20-3-K (-T/O)		
NAPW○H-4X20-10-□ (-T/O)			NAPW○H-4X20-10-K (-T/O)		
NAPW○H-4X20-15-□ (-T/O)			NAPW○H-4X20-15-K (-T/O)		
NAPW○H-4X30-3-□ (-T/O)	PWG-4X30-□		NAPW○H-4X30-3-K (-T/O)		
NAPW○H-4X30-10-□ (-T/O)			NAPW○H-4X30-10-K (-T/O)		
NAPW○H-4X30-15-□ (-T/O)			NAPW○H-4X30-15-K (-T/O)		
NAPW○H-5X10-3-□ (-T/O)	PWG-5X10-□		NAPW○H-4X10-3-K (-T/O)		
NAPW○H-5X10-10-□ (-T/O)			NAPW○H-4X10-10-K (-T/O)		
NAPW○H-5X10-15-□ (-T/O)			NAPW○H-4X10-15-K (-T/O)		
NAPW○H-5X20-3-□ (-T/O)	PWG-5X20-□		NAPW○H-4X20-3-K (-T/O)		
NAPW○H-5X20-10-□ (-T/O)			NAPW○H-4X20-10-K (-T/O)		
NAPW○H-5X20-15-□ (-T/O)			NAPW○H-4X20-15-K (-T/O)		
NAPW○H-5X30-3-□ (-T/O)	PWG-5X30-□		NAPW○H-4X30-3-K (-T/O)		
NAPW○H-5X30-10-□ (-T/O)			NAPW○H-4X30-10-K (-T/O)		
NAPW○H-5X30-15-□ (-T/O)			NAPW○H-4X30-15-K (-T/O)		
NAPW○H-6X10-3-□ (-T/O)	PWG-6X10-□		NAPW○H-4X10-3-K (-T/O)		
NAPW○H-6X10-10-□ (-T/O)			NAPW○H-4X10-10-K (-T/O)		
NAPW○H-6X10-15-□ (-T/O)			NAPW○H-4X10-15-K (-T/O)		
NAPW○H-6X20-3-□ (-T/O)	PWG-6X20-□		NAPW○H-4X20-3-K (-T/O)		
NAPW○H-6X20-10-□ (-T/O)			NAPW○H-4X20-10-K (-T/O)		
NAPW○H-6X20-15-□ (-T/O)			NAPW○H-4X20-15-K (-T/O)		
NAPW○H-6X30-3-□ (-T/O)	PWG-6X30-□		NAPW○H-4X30-3-K (-T/O)		
NAPW○H-6X30-10-□ (-T/O)			NAPW○H-4X30-10-K (-T/O)		
NAPW○H-6X30-15-□ (-T/O)			NAPW○H-4X30-15-K (-T/O)		
NAPW○H-8X20-3-□ (-T/O)	PWG-8X20-□		NAPW○H-4X20-3-K (-T/O)		
NAPW○H-8X20-10-□ (-T/O)			NAPW○H-4X20-10-K (-T/O)		
NAPW○H-8X20-15-□ (-T/O)			NAPW○H-4X20-15-K (-T/O)		
NAPW○H-8X30-3-□ (-T/O)	PWG-8X30-□		NAPW○H-4X30-3-K (-T/O)		
NAPW○H-8X30-10-□ (-T/O)			NAPW○H-4X30-10-K (-T/O)		
NAPW○H-8X30-15-□ (-T/O)			NAPW○H-4X30-15-K (-T/O)		

※□ in the table indicates the cup material.
※○ in the table indicates the vacuum port (T or Y).

NAPWTH•YH Cup with Non-rotation Spring Fitting

Dimensions

(mm)

NAPWT/YH-4X10～4X30

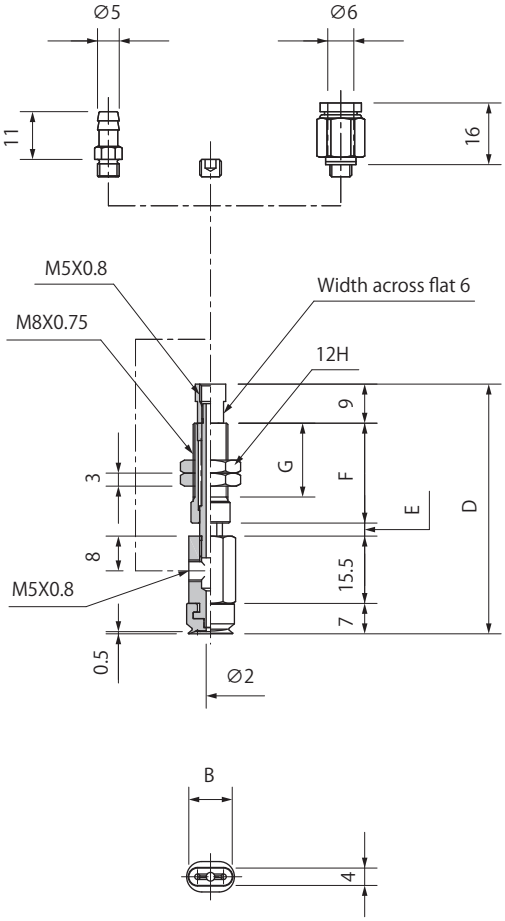

Model number	B	D	E	F	G	Weight (g)
NAPWT/YH-4X10-3-□ (-T/O)	10	57.5	3	23	17	19.5
NAPWT/YH-4X10-10-□ (-T/O)		64.5	10			20
NAPWT/YH-4X10-15-□ (-T/O)		77	15	30.5	24.5	23
NAPWT/YH-4X20-3-□ (-T/O)	20	57.5	3	23	17	20
NAPWT/YH-4X20-10-□ (-T/O)		64.5	10			20.5
NAPWT/YH-4X20-15-□ (-T/O)		77	15	30.5	24.5	23.5
NAPWT/YH-4X30-3-□ (-T/O)	30	57.5	3	23	17	20.5
NAPWT/YH-4X30-10-□ (-T/O)		64.5	10			21
NAPWT/YH-4X30-15-□ (-T/O)		77	15	30.5	24.5	24

※□ in the table indicates the cup material.
※ The weight value is when NBR（Nitrile rubber）/ without connector selected.

NAPWT/YH-5X10～5X30

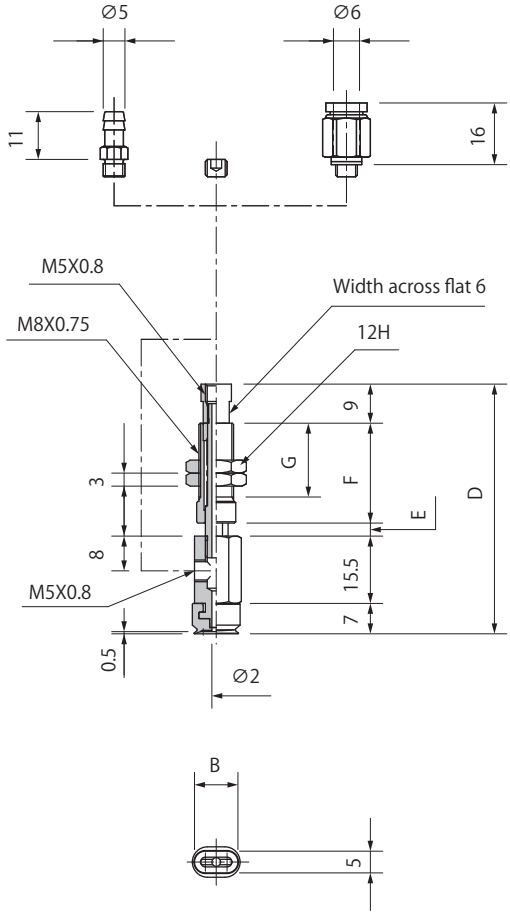

Model number	B	D	E	F	G	Weight (g)
NAPWT/YH-5X10-3-□ (-T/O)	10	57.5	3	23	17	19.5
NAPWT/YH-5X10-10-□ (-T/O)		64.5	10			20
NAPWT/YH-5X10-15-□ (-T/O)		77	15	30.5	24.5	23
NAPWT/YH-5X20-3-□ (-T/O)	20	57.5	3	23	17	20
NAPWT/YH-5X20-10-□ (-T/O)		64.5	10			20.5
NAPWT/YH-5X20-15-□ (-T/O)		77	15	30.5	24.5	23.5
NAPWT/YH-5X30-3-□ (-T/O)	30	57.5	3	23	17	20.5
NAPWT/YH-5X30-10-□ (-T/O)		64.5	10			21
NAPWT/YH-5X30-15-□ (-T/O)		77	15	30.5	24.5	24

※□ in the table indicates the cup material.
※ The weight value is when NBR（Nitrile rubber）/ without connector selected.

Common Specifications

Connector Weight(g)

Symbol	Tube O.D ϕ 6
T	1.5
O	4.0

Dimensions

(mm)

NAPWT/YH-6X10～6X30

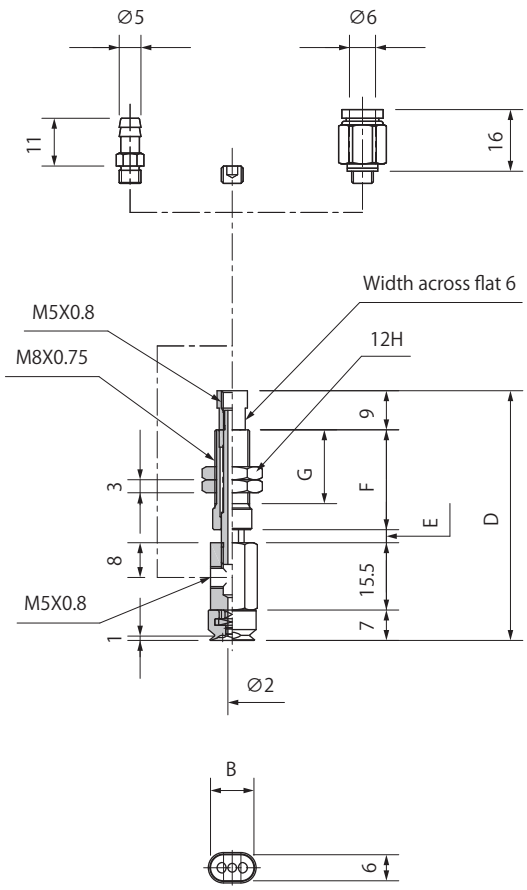

NAPWT/YH-8X20～8X30

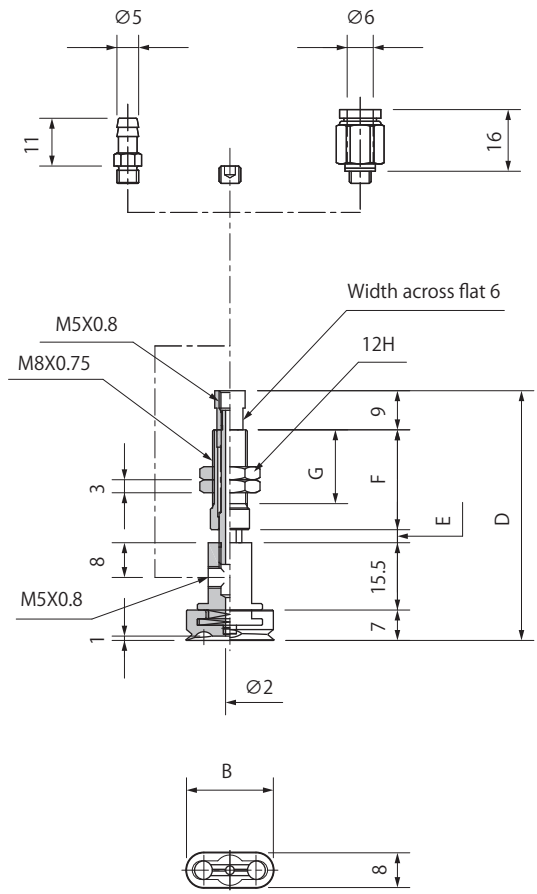

Model number	B	D	E	F	G	Weight (g)
NAPWT/YH-6X10-3-□ (-T/O)	10	57.5	3	23	17	19.5
NAPWT/YH-6X10-10-□ (-T/O)		64.5	10			20
NAPWT/YH-6X10-15-□ (-T/O)		77	15	30.5	24.5	23
NAPWT/YH-6X20-3-□ (-T/O)	20	57.5	3	23	17	20
NAPWT/YH-6X20-10-□ (-T/O)		64.5	10			20.5
NAPWT/YH-6X20-15-□ (-T/O)		77	15	30.5	24.5	23.5
NAPWT/YH-6X30-3-□ (-T/O)	30	57.5	3	23	17	20.5
NAPWT/YH-6X30-10-□ (-T/O)		64.5	10			21
NAPWT/YH-6X30-15-□ (-T/O)		77	15	30.5	24.5	24

※□ in the table indicates the cup material.
※ The weight value is when NBR（Nitrile rubber）/ without connector selected.

Model number	B	D	E	F	G	Weight (g)
NAPWT/YH-8X20-3-□ (-T/O)	20	57.5	3	23	17	20
NAPWT/YH-8X20-10-□ (-T/O)		64.5	10			20.5
NAPWT/YH-8X20-15-□ (-T/O)		77	15	30.5	24.5	23.5
NAPWT/YH-8X30-3-□ (-T/O)	30	57.5	3	23	17	20.5
NAPWT/YH-8X30-10-□ (-T/O)		64.5	10			21
NAPWT/YH-8X30-15-□ (-T/O)		77	15	30.5	24.5	24

※□ in the table indicates the cup material.
※ The weight value is when NBR（Nitrile rubber）/ without connector selected.

Common Specifications

Connector Weight(g)

Symbol	Tube O.D ϕ 6
T	1.5
O	4.0

RA Series

Mark Free Cup

RoHS

Mark free by special treatment at the molecular level!

By using a special treatment on the rubber (suction cup) to improve its surface, adhesion of foreign matters on the suction cup is greatly reduced as no particles of the suction pads will be transferred to the workpieces.

Comparison

Work piece: glass

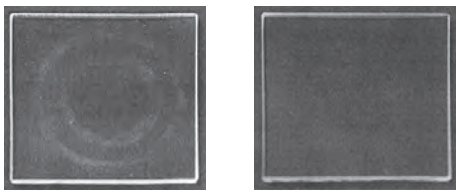

NBR RA

Principle

By using special treatment, the intermolecular bond of the rubber becomes stronger. By strengthening the intermolecular bond, we have succeeded in reducing adhesion of suction-pad particles on the workpieces.

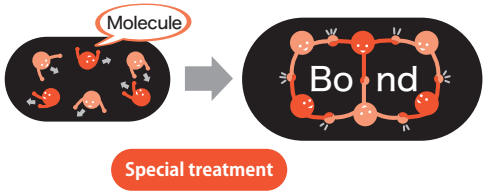

Note: Please note that, depending on the workpieces, usage conditions and the environment, the effectiveness may vary and that, in certain cases, the use of these suction cups may have no effect.

Optimum for conveying glass sheets and other workpieces that need to be free from marks.

For various shapes cups.

If this suction cup material is used for fluorine rubber and conductive fluorine rubber, suction cups of any series can be used(exclude a few model).

Symbol	Material	Hardness (A/s)	Ambient temperature (℃)	Color	Volume resistivity Note1.2
F-RA	Mark free fluorine rubber	70	-10～230	Black with white dot	-
FE-RA	Mark free conductive fluorine rubber	70	0～200	Black	10^4～10^7 Ω·cm

Note1) Volume resistivity shows conductivity, resistance value is per cm^3.
Note2) It is the measured value of in our designated test piece.

How to Order

PFG – 30 – F – RA

① ② ③

①Applicable Series

PAG
Flat type／Thin lip

5B	ϕ5	15B	ϕ15	30	ϕ30
10A	ϕ10	20A	ϕ20	30B	ϕ30
10B	ϕ10	20B	ϕ20	40	ϕ40
15A	ϕ15	25	ϕ25	50	ϕ50

PBG
2 bellows type／Thick lip

10A	ϕ10	30	ϕ30
15A	ϕ15	40	ϕ40
20	ϕ20	50	ϕ50

PFG
Flat type／Standard

1.5A	ϕ1.5	3.5A	ϕ3.5	6A	ϕ6	15	ϕ15	30	ϕ30
2A	ϕ2	3.5×7A	3.5×7	8A	ϕ8	20B	ϕ20	35	ϕ35
2×4A	2×4	3.5×7	3.5×7	10A	ϕ10	20	ϕ20	40	ϕ40
2×4	2.2×4.2	5A	ϕ5	15A	ϕ15	25	ϕ25	50	ϕ50

PJG
2 bellows type／Thin lip

4	ϕ4	15	ϕ15	35	ϕ35
6	ϕ6	20	ϕ20	40	ϕ40
8	ϕ8	25	ϕ25	50	ϕ50
10	ϕ10	30	ϕ30		

PQG
Flat type／Non Rotation

6	ϕ6
8	ϕ8
10	ϕ10

PUG
Flat type／Swivel Cup

10	ϕ10	25	ϕ25	40	ϕ40
15	ϕ15	30	ϕ30	50	ϕ50
20	ϕ20	35	ϕ35	60	ϕ60

②Cup Size (mm)

③Cup Rubber Material

Symbol	Material
F	Fluorine rubber
FE	Conductive fluorine rubber

※Please consult with us for other series and cup size.
※Refer to the page of applicable suction cup series for fitting and setting screw.

SM Series

Metal Detectable Suction Cup

RoHS

New material that reacts with a metal detector!

- Suction cups made of silicone rubber containing metallic components, If cup rubber is mixed because of breakage or dropping, it reacts with a metal detector. ※1
- Detectability with X-ray detectors is improved. ※1

Rubber material symbol	Material	Hardness (A/s)	Ambient temperature(℃)	Color
SM	Metal detectable silicone	55	-60~250	Gray ※2

※1) May fail in detection, depending on the set conditions of the detector and types of foods being manufactured. Check in the actual use conditions in advance.

※2) Subject to color unevenness due to material characteristics. However, it has no influence upon the performances.

Can be applied to the various shapes cups

- Standard flat, 2 bellows, 3 bellows, multiple bellows, Thin type, etc.

Applicable series PB, PC, PF, PJ, PL, PN Less than ϕ50mm

Most suitable for avoiding mixing of foreign matters in food industries and medical industries.

Reliable and safe material

Material that passed FDA-compatible Food Sanitation Law tests is used.※1

※1)Falls under the category of the "rubber products to be used repeatedly" specified in FDA: 21CFR§177.2600.

Testing methods of rubber-made instruments (excluding baby's bottles) or container packages in 3 (1) of the standard according to materials of D instruments or container packages or their raw materials of standard 3 instruments and container packages for foods, additives, etc., based on the provision of Article 10, paragraph 1 of the Food Sanitation Law

(Conforms to notice 595 of the Ministry of Health, Labour and Welfare as of December 28, 2012.)

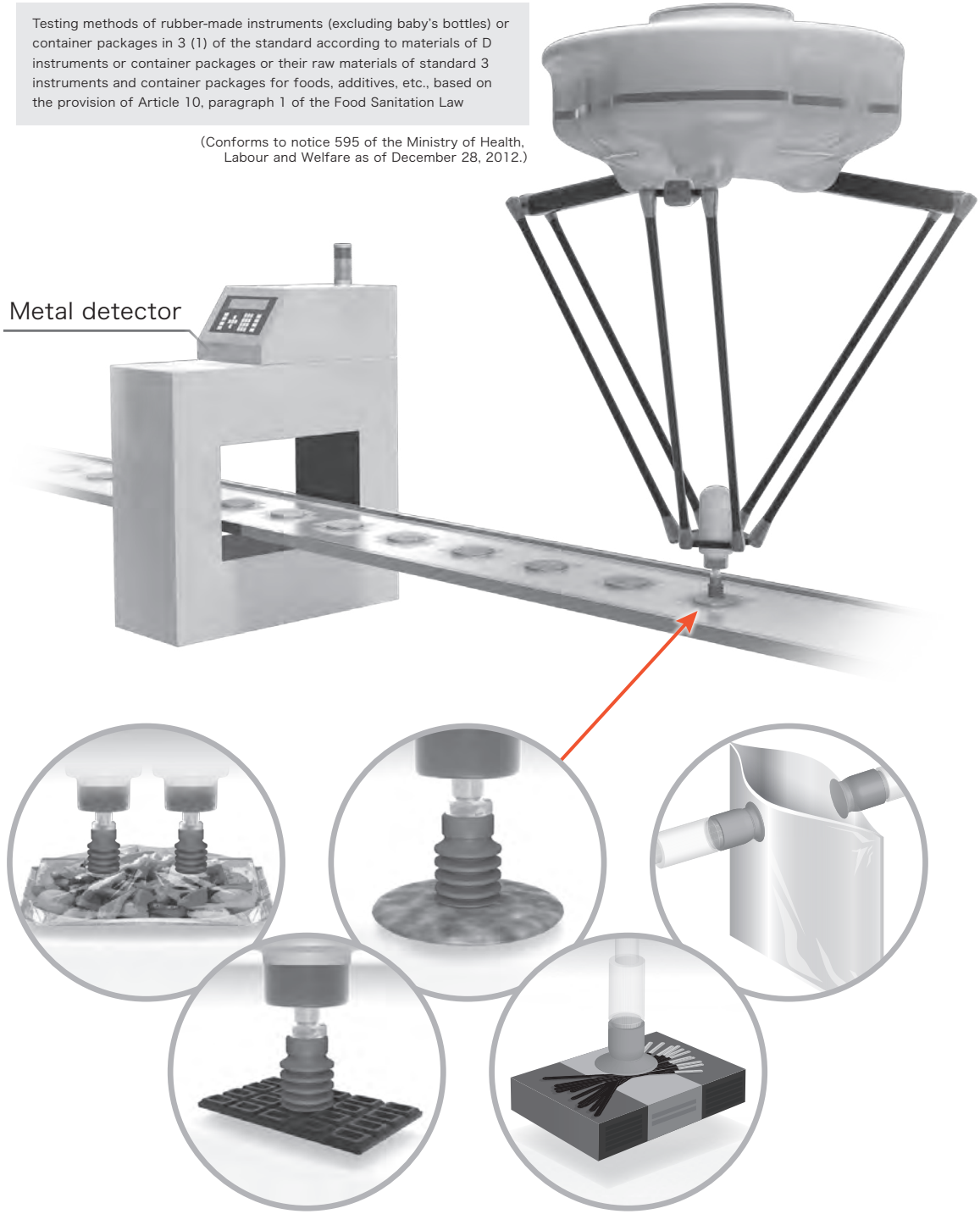

Contact us for samples for detection tests.

How to Order

PFG ① – **30** ② – **SM**

①Applicable Series ②Cup Size (mm)

PBG
2 bellows type／Thick lip

10A	ϕ10	30	ϕ30
15A	ϕ15	40	ϕ40
20	ϕ20	50	ϕ50

PCG
3 bellows type

5	ϕ5	15	ϕ15	30	ϕ30
7	ϕ7	18	ϕ18	40	ϕ40
10	ϕ10	20	ϕ20		

PFG
Flat type／Standard

1.5A	ϕ1.5	3.5A	ϕ3.5	6A	ϕ6	15	ϕ15	30	ϕ30
2A	ϕ2	3.5×7A	3.5×7	8A	ϕ8	20B	ϕ20	35	ϕ35
2×4A	2×4	3.5×7	3.5×7	10A	ϕ10	20	ϕ20	40	ϕ40
2×4	2.2×4.2	5A	ϕ5	15A	ϕ15	25	ϕ25	50	ϕ50

PJG
2 bellows type／Thin lip

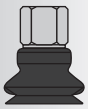

4	ϕ4	15	ϕ15	35	ϕ35
6	ϕ6	20	ϕ20	40	ϕ40
8	ϕ8	25	ϕ25	50	ϕ50
10	ϕ10	30	ϕ30		

PLG
Multiple Bellows

20	ϕ20	50	ϕ50
30	ϕ30		
40	ϕ40		

PNG
Thin type

101	ϕ31	106	ϕ25	110	ϕ23	116	ϕ18	123	ϕ15	131	ϕ25
102	ϕ25	107	ϕ49	111	ϕ25	117	ϕ17.6	125	ϕ24	132	ϕ15
103	ϕ25	108	ϕ40	112	ϕ27	121	ϕ31	130A	ϕ20	133	ϕ25
104	ϕ24.8	109	ϕ17	114	ϕ17	122	ϕ34	130B	ϕ20	134	ϕ35

PNG
Thin type／2 bellows

132B	ϕ18
133B	ϕ25
134B	ϕ35

※Please consult with us for other series and cup size.
※Refer to the page of applicable suction cup series for fitting and setting screw.

Sensitivity Comparison Data

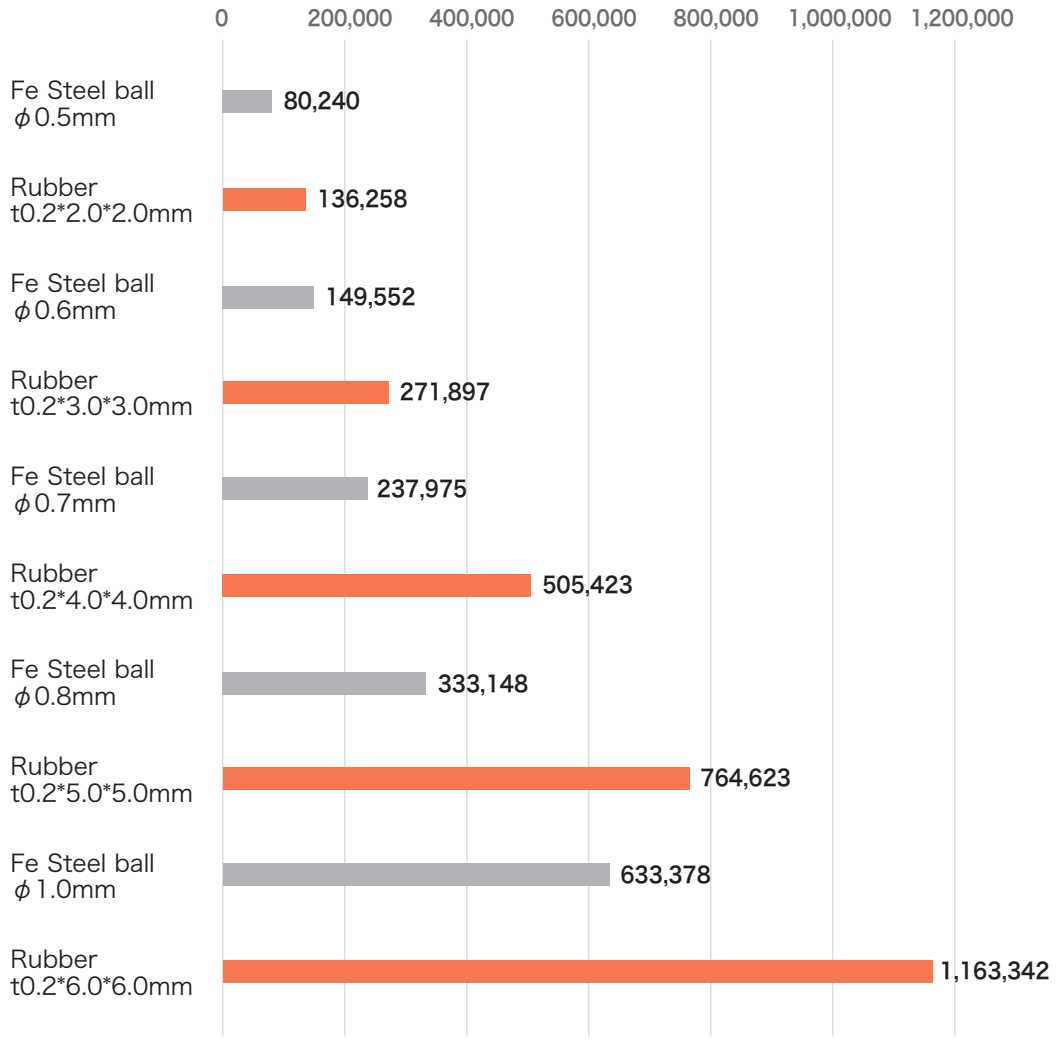

Test methods

- Sensitivities of 0.2 mm thick "SM" rubber sheet test piece and steel ball are shown in a graph.
- The maximum output values are read without taking the phase angles of detection sensitivity into consideration.
- Output values are physical quantities AD converted from the reception coil side and have no unit.
- Without work: 17,494
- Measuring instrument : AD-4971-3510 made by A & D Company Limited, detection sensitivity – Fe : ϕ0.3 mm, SUS: ϕ0.8 mm

Setting Screw

RoHS

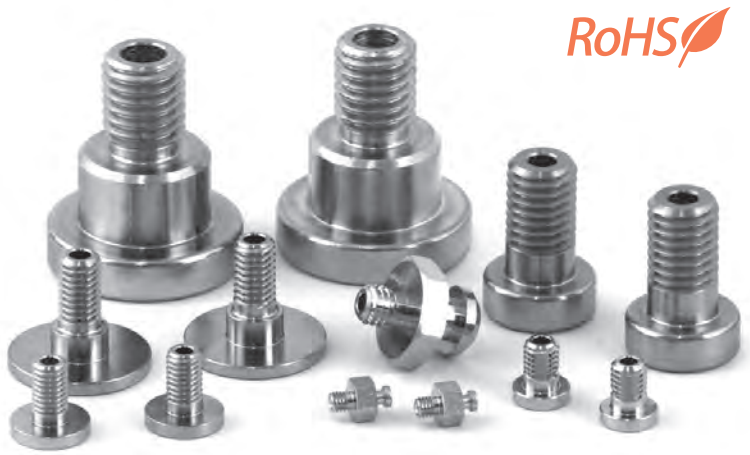

02 Suction Cup
PA
PB
PC
PCD
PD
PF
PFO
PH
PJ
CORE
PK2
PK2B
PK2L
PL
PN
PN-B
PP
PQ
PR
PU
PW
RA
SM
TN

Dimensions

(mm)

Model	TN-PA-30-M6	Weight	8.6g

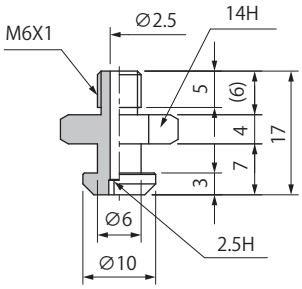

Applicable cup model
PAG-30B- □

※□ in the table indicates the cup material.

Model	TN-PC-10-M5	Weight	3.9g

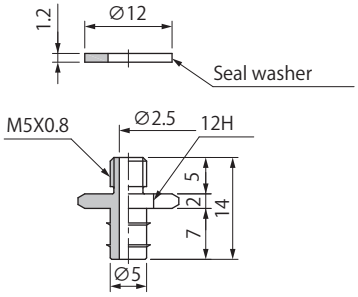

Applicable cup model
PCG-10- □
PCG-15- □
PCG-18- □
PCG-20- □

※□ in the table indicates the cup material.

Model	TN-PC-30-M6	Weight	8.7g

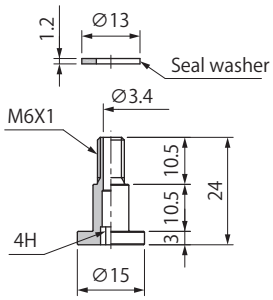

Applicable cup model
PCG-30- □
PCG-40- □
PCG-60- □

※□ in the table indicates the cup material.

Model	TN-PC-30-M8	Weight	12.3g

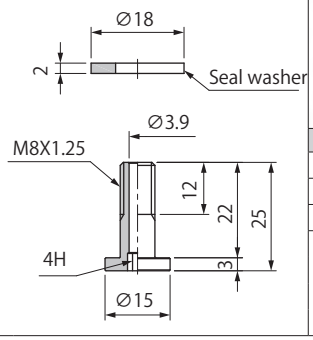

Applicable cup model
PCG-30- □
PCG-40- □
PCG-60- □

※□ in the table indicates the cup material.

Model	TN-PC-90-M12	Weight	47.4g

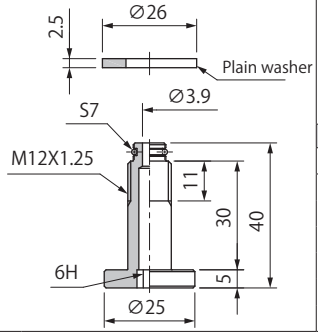

Applicable cup model
PCG-90- □

※□ in the table indicates the cup material.

Model	TN-PF-10-M5	Weight	1.0g

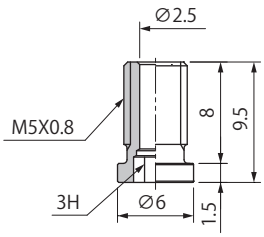

Applicable cup model
PFG-10-□
PK2-10-T

※□ in the table indicates the cup material.

Dimensions

(mm)

Model	TN-PF-15-M5	Weight	1.4g

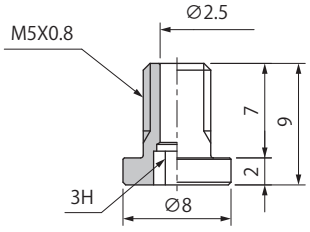

Applicable cup model
PFG-15- □
PJG-10/15- □
PK2–15/20-T
PRG-12.5X23- □

※□ in the table indicates the cup material.

Model	TN-PF-20-M5	Weight	2.3g

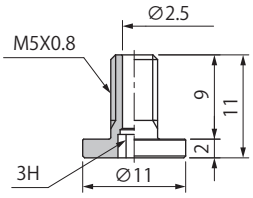

Applicable cup model
PBG-20- □
PDG-20- □
PFG-20- □
PFOG-20- □
PJG-20/25- □
PNG-121- □
PRG-32X32 □

※□ in the table indicates the cup material.

Model	TN-PF-25-M6	Weight	3.3g

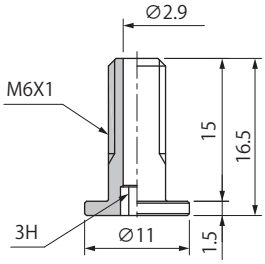

Applicable cup model
PBG-30/40- □
PDG-20/30/40- □
PFG-20B/25/30/35/40- □
PFOG-/25/30/35/40- □
PHG-30/45- □
PJG-30/35/40- □
PK2-25-T

※□ in the table indicates the cup material.

Model	TN-PF-50-M6	Weight	7.8g

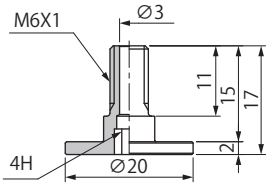

Applicable cup model
PBG-50- □
PDG-50- □
PFG-50- □
PJG-50- □

※□ in the table indicates the cup material.

Model	TN-PF-50-M8	Weight	8.9g

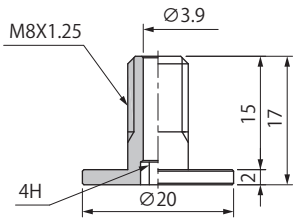

Applicable cup model
PBG-50- □
PDG-50- □
PFG-50- □
PJG-50- □

※□ in the table indicates the cup material.

Model	TN-PH-65-M10	Weight	30.3g

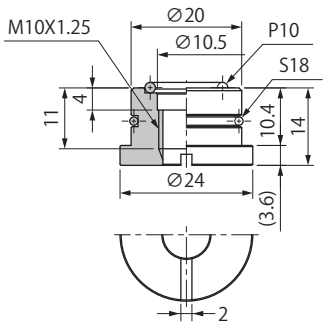

Applicable cup model
PHG-65- □
PHG-90- □

※□ in the table indicates the cup material.

Model	TN-PK-100-M10	Weight	34.7g

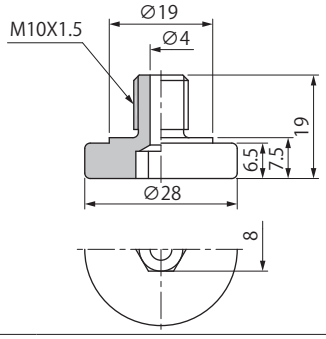

Applicable cup model
PK2-60-T
PK2-80-T
PK2-100-T
PK2-120-T
PK2-150-T

Model	TN-PK2-30-M6	Weight	13.1g

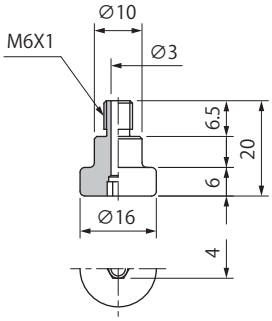

Applicable cup model
PK2-30-T
PK2-50-T

※□ in the table indicates the cup material.

TN Setting Screw

Dimensions

(mm)

Model	TN-PK-100-M10F	Weight	45.9g

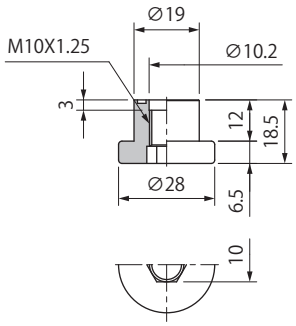

Applicable cup model
PK2-60-T
PK2-80-T
PK2-100-T
PK2-120-T
PK2-150-T

Model	TN-PK-100-M12	Weight	55.9g

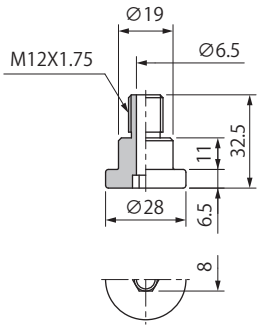

Applicable cup model
PK2-60-T
PK2-80-T
PK2-100-T
PK2-120-T
PK2-150-T

Model	TN-PK-6710	Weight	50.6g

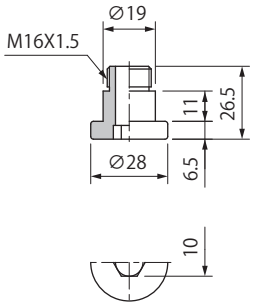

Applicable cup model
PK2-60-T
PK2-80-T
PK2-100-T
PK2-120-T
PK2-150-T

Model	TN-PK2-30-M10	Weight	14.4 g

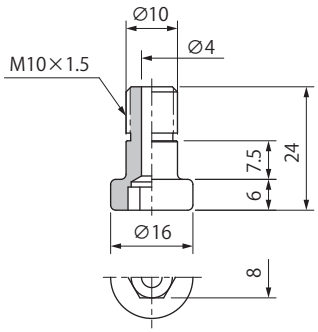

Applicable cup model
PK2-30-T
PK2-50-T

Model	TN-PK2-40-M6	Weight	14.2 g

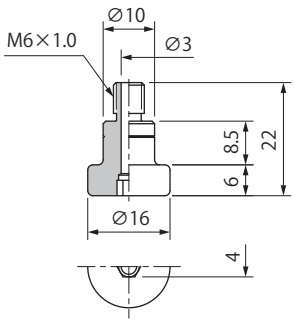

Applicable cup model
PK2-40-T

Model	TN-PK2-40-M10	Weight	15.3 g

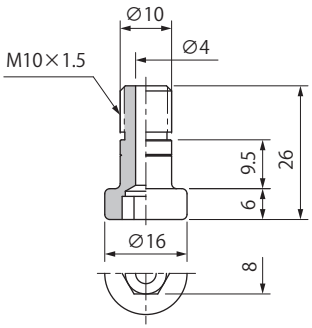

Applicable cup model
PK2-40-T

Model	TN-PK2L-M6	Weight	4.5g

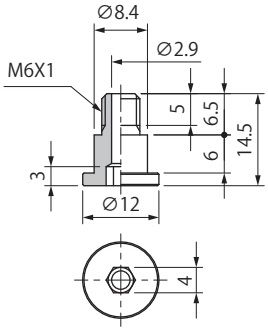

Applicable cup model
PK2L-60X20-T
PK2L-80X30-T

Model	TN-PK2L-M8	Weight	5.7g

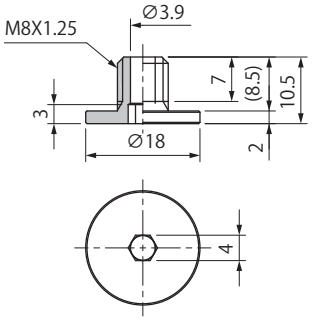

Applicable cup model
TN-PK2L-100×40-T

Dimensions

(mm)

Model	TN-PN-101-M6	Weight	26.0g

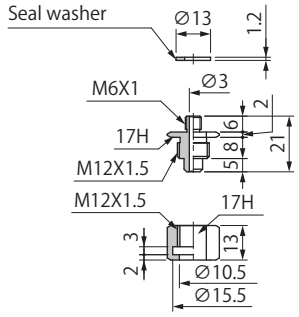

Applicable cup model
PNG-101- □

※□ in the table indicates the cup material.

Model	TN-PN-102-M6	Weight	25.8g

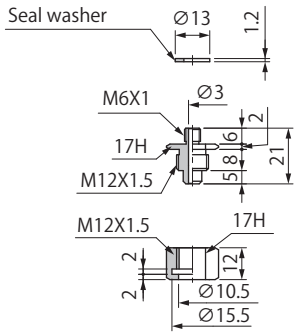

Applicable cup model
PNG-102- □

※□ in the table indicates the cup material.

Model	TN-PN-103-M6	Weight	7.8g

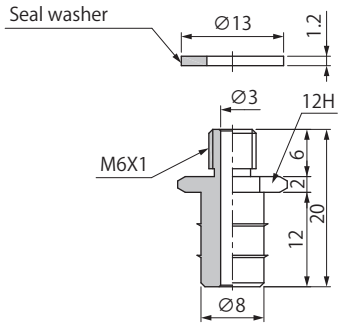

Applicable cup model
PNG-103- □

※□ in the table indicates the cup material.

Model	TN-PN-104-M6	Weight	5.6g

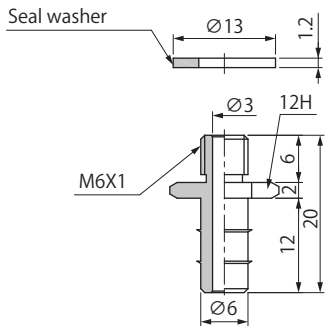

Applicable cup model
PNG-104- □
PNG-106- □
PNG-110- □
PNG-111- □

※□ in the table indicates the cup material.

Model	TN-PN-107-M10	Weight	43.9g

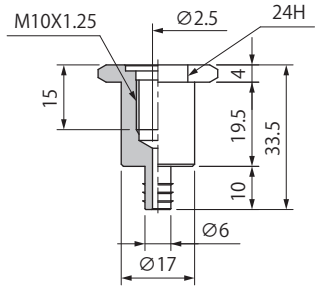

Applicable cup model
PNG-107- □

※□ in the table indicates the cup material.

Model	TN-PN-108-M10	Weight	45.5g

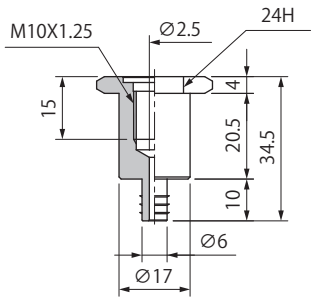

Applicable cup model
PNG-108- □

※□ in the table indicates the cup material.

Model	TN-PN-109-M5	Weight	3.2g

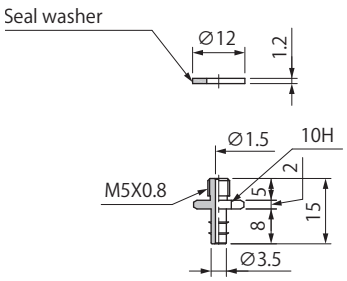

Applicable cup model
PNG-109- □

※□ in the table indicates the cup material.

Model	TN-PN-112-M6	Weight	6.6g

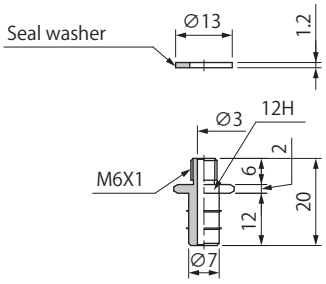

Applicable cup model
PNG-112- □

※□ in the table indicates the cup material.

Dimensions

(mm)

Model	TN-PN-114-M5	Weight	3.0g

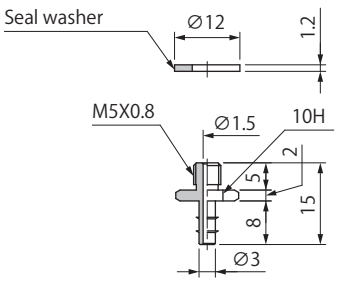

Applicable cup model
PNG-114- □

※□ in the table indicates the cup material.

Model	TN-PN-116-M5	Weight	3.7g

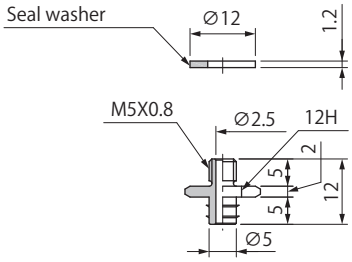

Applicable cup model
PNG-116- □
PNG-117- □
PNG-125- □

※□ in the table indicates the cup material.

Model	TN-PN-122-M6	Weight	25.0g

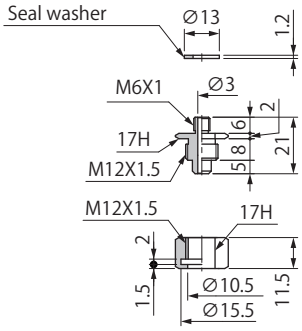

Applicable cup model
PNG-122- □

※□ in the table indicates the cup material.

Model	TN-PN-123-M5	Weight	7.1g

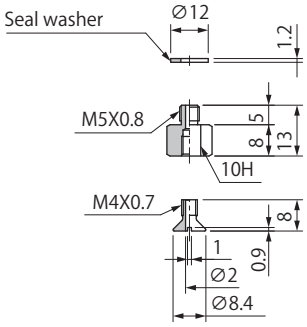

Applicable cup model
PNG-123- □

※□ in the table indicates the cup material.

Model	TN-PN-130-M5	Weight	6.7g

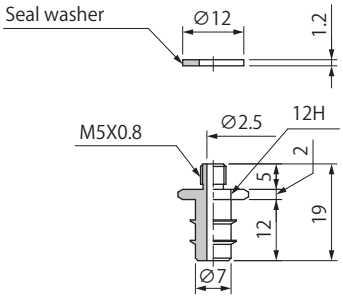

Applicable cup model
PNG-130A- □
PNG-130B- □
PNG-131- □
PNG-133- □
PNG-134- □

※□ in the table indicates the cup material.

Model	TN-PR-15-M5	Weight	5.7g

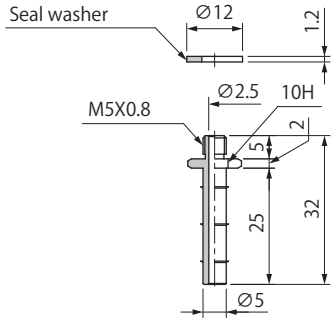

Applicable cup model
PRG-9.5X25- □
PRG-15X30- □

※□ in the table indicates the cup material.

Model	TN-PS-10-M5	Weight	0.8g

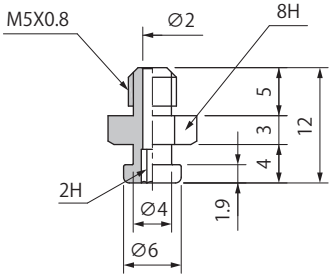

Applicable cup model
PAG-10A/15A/20A- □
PAG-10B/15B/20B- □
PBG-10A/15A- □
PCG-5/7- □
PFG-5A/6A/8A/10A/15A- □
PJG-6/8- □
PNG-132- □

※□ in the table indicates the cup material.

Model	TN-PS-10-M5F	Weight	1.1g

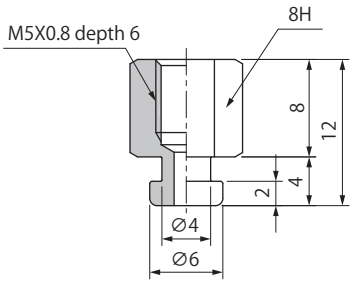

Applicable cup model
PAG-10A/15A/20A- □
PAG-10B/15B/20B- □
PBG-10A/15A- □
PCG-5/7- □
PFG-5A/6A/8A/10A/15A- □
PJG-6/8- □
PNG-132- □

※□ in the table indicates the cup material.

Dimensions

(mm)

Model	TN-PS-2A-M3	Weight	1.2g

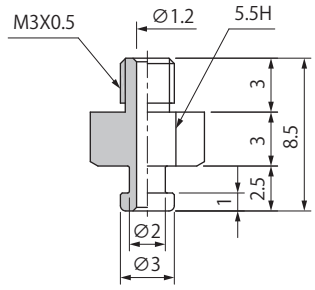

Applicable cup model
PAG-5B- □
PCG-3- □
PFG-1.5A- □
PFG-2A- □
PFG-3.5A- □
PJG-2/4- □

※□ in the table indicates the cup material.

Model	TN-PS-2A-M3F	Weight	0.8g

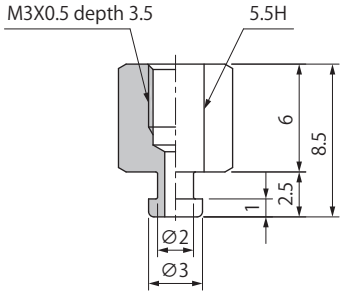

Applicable cup model
PAG-5B- □
PCG-3- □
PFG-1.5A- □
PFG-2A- □
PFG-3.5A- □
PJG-2/4- □

※□ in the table indicates the cup material.

Model	TN-PS-2A-M5	Weight	0.5g

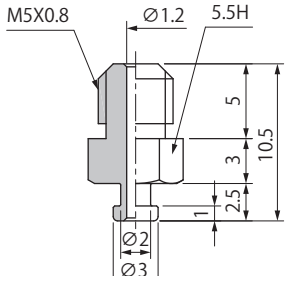

Applicable cup model
PAG-5B- □
PCG-3- □
PFG-1.5A- □
PFG-2A- □
PFG-3.5A- □
PJG-2/4- □

※□ in the table indicates the cup material.

Model	TN-PS-2X4A-M3	Weight	0.9g

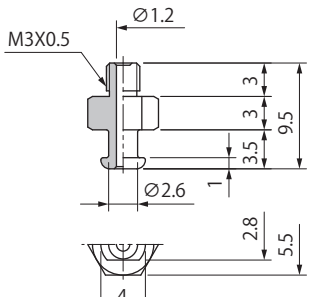

Applicable cup model
PFG-2X4A- □
PFG-3.5X7A- □

※□ in the table indicates the cup material.

Model	TN-PS-2X4A-M3F	Weight	1.3g

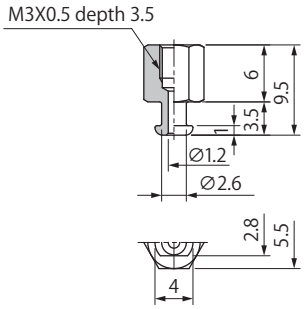

Applicable cup model
PFG-2X4A- □
PFG-3.5X7A- □

※□ in the table indicates the cup material.

Fitting • Setting Screw • Cup with Fitting Application List

Fixed Type • Top port

Fitting model	Applicable cup with fitting	Setting screw model	Tightening torque (N・m)
PATK-25-K	PATK-25- □	Screw the fitting directly into the male screw in the cup	2.6
	PATK-30- □		2.6
	PATK-30B- □	TN-PA-30-M6	2.6
	PATK-40- □	Screw the fitting directly into the male screw in the cup	2.6
	PATK-50- □		2.6
PCTK-90-K	PCTK-90- □	TN-PC-90-M12	–
PFTK-1.5A-K	PFTK-1.5A- □	Attach the cup directly to the fitting	–
	PFTK-2A- □		–
	PFTK-3.5A- □		–
	PJTK-2- □		–
	PJTK-4- □		–
PFTK-2X4-K	PFTK-2X4- □	The cup is integrated to the fitting with adhesive	–
PFTK-3.5X7-K	PFTK-3.5X7- □		–
PFTK-5A-K	PCTK-5- □	Attach the cup directly to the fitting	–
	PCTK-7- □		–
	PFTK-5A- □		–
	PFTK-6A- □		–
	PFTK-8A- □		–
	PJTK-6- □		–
	PJTK-8- □		–
	PNTK-132- □		–
PFTK-10A-K	PATK-10A- □	Attach the cup directly to the fitting	–
	PATK-10B- □		–
	PATK-15A- □		–
	PATK-15B- □		–
	PATK-20A- □		–
	PATK-20B- □		–
	PBTK-10A- □		–
	PBTK-15A- □		–
	PFTK-10A- □		–
PFTK-15-K	PBTK-20- □	TN-PF-20-M5	–
	PCTK-10- □	TN-PC-10-M5	1.5
	PCTK-15- □		1.5
	PCTK-18- □		1.5
	PCTK-20- □		1.5
	PDTK-20	TN-PF-20-M5	1.5
	PFTK-15- □	TN-PF-15-M5	–
	PFTK-20- □	TN-PF-20-M5	–
	PFOTK-20- □		–
	PJTK-10- □	TN-PF-15-M5	–
	PJTK-15- □		–
	PJTK-20- □	TN-PF-20-M5	–
	PJTK-25- □		–
	PNTK-109- □	TN-PN-109-M5	1.5
	PNTK-114- □	TN-PN-114-M5	1.5
	PNTK-116- □	TN-PN-116-M5	1.5
	PNTK-117- □		1.5
	PNTK-121- □	TN-PF-20-M5	–
	PNTK-123- □	TN-PN-123-M5	–
	PNTK-125- □	TN-PN-116-M5	1.5
	PNTK-130A- □	TN-PN-130-M5	1.5
	PNTK-130B- □		1.5
	PNTK-131- □		1.5
	PNTK-133- □		1.5
	PNTK-134- □		1.5
	PRTK-9.5X25- □	TN-PR-15-M5	1.5
	PRTK-12.5X23- □	TN-PF-15-M5	–
	PRTK-15X30- □	TN-PR-15-M5	1.5
	PRTK-32X32- □	TN-PF-20-M5	–
PFTK-25-K	PBTK-30- □	TN-PF-25-M6	–
	PBTK-40- □		–
	PDTK-30		2.6
	PDTK-40		2.6
	PFTK-25- □		–
	PFTK-30- □		–
	PFTK-35- □		–
	PFTK-40- □		–
	PFOTK-25- □		–
	PFOTK-30- □		–
	PFOTK-35- □		–
	PFOTK-40- □		–
	PHTK-30- □		–
	PHTK-45- □		–
	PJTK-30- □		–
	PJTK-35- □		–
	PJTK-40- □		–
	PNTK-101- □	TN-PN-101-M6	2.6
	PNTK-102- □	TN-PN-102-M6	2.6
	PNTK-103- □	TN-PN-103-M6	2.6
	PNTK-104- □	TN-PN-104-M6	2.6
	PNTK-106- □		2.6
	PNTK-110- □		2.6
	PNTK-111- □		2.6
	PNTK-112- □	TN-PN-112-M6	2.6
	PNTK-122- □	TN-PN-122-M6	2.6

Fitting model	Applicable cup with fitting	Setting screw model	Tightening torque (N・m)
PFTK-50-K	PBTK-50- □	TN-PF-50-M8	–
	PCTK-30- □	TN-PC-30-M8	–
	PCTK-40- □		–
	PCTK-60- □		–
	PDTK-50	TN-PF-50-M8	4.7
	PFTK-50- □		–
	PJTK-50- □		–
PFTK-60-K	PBTK-75- □	Screw the fitting directly into the female screw in the cup	–
	PDTK-60	Screw the fitting directly into the holder	12.5
	PDTK-70		12.5
	PDTK-80		12.5
	PDTK-100		12.5
	PFTK-60- □	Screw the fitting directly into the female screw in the cup	–
	PFTK-80- □		–
	PFTK-95- □		–
	PHTK-65- □	TN-PH-65-M10	–
	PHTK-90- □		–
	PJTK-60- □	Screw the fitting directly into the female screw in the cup	–
	PJTK-70- □		–
	PJTK-80- □		–
	PNTK-107- □	TN-PN-107-M10	12.5
	PNTK-108- □	TN-PN-108-M10	12.5
PUTKB-10-K	PUTKB-10- □	Screw the fitting directly to PUGB	–
	PUTKB-15- □		–
PUTKB-20-K	PUTKB-20- □		–
	PUTKB-25- □		–
	PUTKB-30- □		–
	PUTKB-35- □		–
PUTKB-40-K	PUTKB-40- □		–
	PUTKB-50- □		–
PUTKB-60-K	PUTKB-60- □		–
	PUTKB-80- □		–
	PUTKB-100- □		–
PUTKB-120-K	PUTKB-120- □		–
	PUTKB-150- □		–
PUTKB-200-K	PUTKB-200- □		–
PWTK-3.5X7-K	PWTK-3.5X7- □	Attach the cup directly to the fitting	–
PWTK-4X10-K	PWTK-4X10- □		–
	PWTK-5X10- □		–
	PWTK-6X10- □		–
PWTK-4X20-K	PWTK-4X20- □		–
	PWTK-5X20- □		–
	PWTK-6X20- □		–
	PWTK-8X20- □		–
PWTK-4X30-K	PWTK-4X30- □		–
	PWTK-5X30- □		–
	PWTK-6X30- □		–
	PWTK-8X30- □		–

※ The recommended torque is only for metal-to-metal tightening.
No recommended torque models shown as「–」.
※ (-T/O) indicates the connector. T：Barb, O：Push-in
※ □ in the table indicates the cup material.
※ PDTK needs holder for assembly. Refer to P.268 for detailed specifications.

Fixed Type • Side Port

Fitting model	Applicable cup with fitting	Setting screw model	Tightening torque (N・m)
PAYK-25-K	PAYK-25- □	Screw the fitting directly into the male screw in the cup	2.6
	PAYK-30- □		2.6
	PAYK-30B- □	TN-PA-30-M6	2.6
	PAYK-40- □	Screw the fitting directly into the male screw in the cup	2.6
	PAYK-50- □		2.6
PCYK-90-K	PCYK-90- □	TN-PC-90-M12	–
PFYK-1.5A-K	PFYK-1.5A- □	Attach the cup directly to the fitting	–
	PFYK-2A- □		–
	PFYK-3.5A- □		–
	PJYK-2- □		–
	PJYK-4- □		–
PFYK-2X4-K	PFYK-2X4- □	The cup is integrated to the fitting with adhesive	–
PFYK-3.5X7-K	PFYK-3.5X7- □		–
PFYK-5A-K	PAYK-10A- □	Attach the cup directly to the fitting	–
	PAYK-10B- □		–
	PAYK-15A- □		–
	PAYK-15B- □		–
	PAYK-20A- □		–
	PAYK-20B- □		–
	PBYK-10A- □		–
	PBYK-15A- □		–
	PCYK-5- □		–
	PCYK-7- □		–
	PFYK-5A- □		–
	PFYK-6A- □		–
	PFYK-8A- □		–
	PFYK-10A- □		–
	PJYK-6- □		–
	PJYK-8- □		–
	PNYK-132- □		–
PFYK-15-K	PBYK-20- □	TN-PF-20-M5	–
	PCYK-10- □	TN-PC-10-M5	1.5
	PCYK-15- □		1.5
	PCYK-18- □		1.5
	PCYK-20- □		1.5
	PDYK-20	TN-PF-20-M5	1.5
	PFYK-15- □	TN-PF-15-M5	–
	PFYK-20- □	TN-PF-20-M5	–
	PFOYK-20- □		–
	PJYK-10- □	TN-PF-15-M5	–
	PJYK-15- □		–
	PJYK-20- □	TN-PF-20-M5	–
	PJYK-25- □		–
	PNYK-109- □	TN-PN-109-M5	1.5
	PNYK-114- □	TN-PN-114-M5	1.5
	PNYK-116- □	TN-PN-116-M5	1.5
	PNYK-117- □		1.5
	PNYK-121- □	TN-PF-20-M5	–
	PNYK-123- □	TN-PN-123-M5	–
	PNYK-125- □	TN-PN-116-M5	1.5
	PNYK-130A- □	TN-PN-130-M5	1.5
	PNYK-130B- □		1.5
	PNYK-131- □		1.5
	PNYK-133- □		1.5
	PNYK-134- □		1.5
	PRYK-9.5X25- □	TN-PR-15-M5	1.5
	PRYK-12.5X23- □	TN-PF-15-M5	–
	PRYK-15X30- □	TN-PR-15-M5	1.5
	PRYK-32X32- □	TN-PF-20-M5	–

Fitting model	Applicable cup with fitting	Setting screw model	Tightening torque (N・m)
PFYK-25-K	PBYK-30- □	TN-PF-25-M6	–
	PBYK-40- □		–
	PDYK-30		2.6
	PDYK-40		2.6
	PFYK-25- □		–
	PFYK-30- □		–
	PFYK-35- □		–
	PFYK-40- □		–
	PFOYK-25- □		–
	PFOYK-30- □		–
	PFOYK-35- □		–
	PFOYK-40- □		–
	PHYK-30- □		–
	PHYK-45- □		–
	PJYK-30- □		–
	PJYK-35- □		–
	PJYK-40- □		–
	PNYK-101- □	TN-PN-101-M6	2.6
	PNYK-102- □	TN-PN-102-M6	2.6
	PNYK-103- □	TN-PN-103-M6	2.6
	PNYK-104- □	TN-PN-104-M6	2.6
	PNYK-106- □		2.6
	PNYK-110- □		2.6
	PNYK-111- □		2.6
	PNYK-112- □	TN-PN-112-M6	2.6
	PNYK-122- □	TN-PN-122-M6	2.6
PFYK-50-K	PBYK-50- □	TN-PF-50-M8	–
	PCYK-30- □	TN-PC-30-M8	–
	PCYK-40- □		–
	PCYK-60- □		–
	PDYK-50	TN-PF-50-M8	4.7
	PFYK-50- □		–
	PJYK-50- □		–
PFYK-60-K	PBYK-75- □	Screw the fitting directly into the female screw in the cup	–
	PDYK-60	Screw the fitting directly into the holder	–
	PDYK-70		–
	PDYK-80		–
	PDYK-100		–
	PFYK-60- □	Screw the fitting directly into the female screw in the cup	–
	PFYK-80- □		–
	PFYK-95- □		–
	PHYK-65- □	TN-PH-65-M10	–
	PHYK-90- □		–
	PJYK-60- □	Screw the fitting directly into the female screw in the cup	–
	PJYK-70- □		–
	PJYK-80- □		–
	PNYK-107- □	TN-PF-107-M10	12.5
	PNYK-108- □	TN-PF-108-M10	12.5
PFYK-120-K	PBYK-110- □	Mounting by bolts(4 pieces) those are attached to the fitting	–
	PBYK-150- □		–
	PFYK-120- □		–
	PFYK-150- □		–
	PFYK-200- □		–
PUYKB-10-K	PUYKB-10- □	Screw the fitting directly to PUGB	–
	PUYKB-15- □		–
PUYKB-20-K	PUYKB-20- □		–
	PUYKB-25- □		–
	PUYKB-30- □		–
	PUYKB-35- □		–
PUYKB-40-K	PUYKB-40- □		–
	PUYKB-50- □		–
PUYKB-60-K	PUYKB-60- □		–
	PUYKB-80- □		–
	PUYKB-100- □		–
PUYKB-120-K	PUYKB-120- □		–
	PUYKB-150- □		–
PUYKB-200-K	PUYKB-200- □		–
PWYK-3.5X7-K	PWYK-3.5X7- □	Attach the cup directly to the fitting	–
PWYK-4X10-K	PWYK-4X10- □		–
	PWYK-5X10- □		–
	PWYK-6X10- □		–
PWYK-4X20-K	PWYK-4X20- □		–
	PWYK-5X20- □		–
	PWYK-6X20- □		–
	PWYK-8X20- □		–
PWYK-4X30-K	PWYK-4X30- □		–
	PWYK-5X30- □		–
	PWYK-6X30- □		–
	PWYK-8X30- □		–

※ The recommended torque is only for metal-to-metal tightening.
No recommended torque models shown as「–」.
※ (-T/O) indicates the connector. T：Barb, O：Push-in
※ □ in the table indicates the cup material.
※ PDYK needs holder for assembly. Refer to P.268 for detailed specifications.

Fitting • Setting Screw • Cup with Fitting Application List

Spring Type • Top Port

Fitting model	Applicable cup with fitting	Setting screw model	Tightening torque (N・m)
NAPATS-25-6-K(-T/O)	NAPATS-25-6- □ (-T/O)	Screw the fitting directly into the male screw in the cup	2.6
	NAPATS-30-6- □ (-T/O)		2.6
	NAPATS-30B-6- □ (-T/O)	TN-PA-30-M6	2.6
	NAPATS-40-6- □ (-T/O)	Screw the fitting directly into the male screw in the cup	2.6
	NAPATS-50-6- □ (-T/O)		2.6
NAPATS-25-15-K(-T/O)	NAPATS-25-15- □ (-T/O)	Screw the fitting directly into the male screw in the cup	2.6
	NAPATS-30-15- □ (-T/O)		2.6
	NAPATS-30B-15- □ (-T/O)	TN-PA-30-M6	2.6
	NAPATS-40-15- □ (-T/O)	Screw the fitting directly into the male screw in the cup	2.6
	NAPATS-50-15- □ (-T/O)		2.6
NAPATS-25-30-K(-T/O)	NAPATS-25-30- □ (-T/O)	Screw the fitting directly into the male screw in the cup	2.6
	NAPATS-30-30- □ (-T/O)		2.6
	NAPATS-30B-30- □ (-T/O)	TN-PA-30-M6	2.6
	NAPATS-40-30- □ (-T/O)	Screw the fitting directly into the male screw in the cup	2.6
	NAPATS-50-30- □ (-T/O)		2.6
NAPBTS-20-6-K(T/O)	NAPBTS-20-6- □ (T/O)	TN-PF-20-M5	–
	NAPFOTS-20-6- □ (T/O)		–
	NAPJTS-20-6- □ (T/O)		–
	NAPJTS-25-6- □ (T/O)		–
	NAPNTS-121-6- □ (T/O)		–
NAPBTS-20-15-K(T/O)	NAPBTS-20-15- □ (T/O)	TN-PF-20-M5	–
	NAPFOTS-20-15- □ (T/O)		–
	NAPJTS-20-15- □ (T/O)		–
	NAPJTS-25-15- □ (T/O)		–
	NAPNTS-121-15- □ (T/O)		–
NAPBTS-20-30-K(T/O)	NAPBTS-20-30- □ (T/O)	TN-PF-20-M5	–
	NAPFOTS-20-30- □ (T/O)		–
	NAPJTS-20-30- □ (T/O)		–
	NAPJTS-25-30- □ (T/O)		–
	NAPNTS-121-30- □ (T/O)		–
NAPCTS-10-3-K(-T/O)	NAPCTS-10-3- □ (-T/O)	TN-PC-10-M5	1.5
	NAPCTS-15-3- □ (-T/O)		1.5
	NAPCTS-18-3- □ (-T/O)		1.5
	NAPCTS-20-3- □ (-T/O)		1.5
	NAPJTS-10-3- □ (-T/O)	TN-PF-15-M5	–
	NAPJTS-15-3- □ (-T/O)		–
	NAPNTS-109-3- □ (-T/O)	TN-PN-109-M5	1.5
	NAPNTS-114-3- □ (-T/O)	TN-PN-114-M5	1.5
	NAPNTS-116-3- □ (-T/O)	TN-PN-116-M5	1.5
	NAPNTS-117-3- □ (-T/O)		1.5
	NAPNTS-123-3- □ (-T/O)	TN-PN-123-M5	–
	NAPNTS-125-3- □ (-T/O)	TN-PN-116-M5	1.5
	NAPNTS-130A-3- □ (-T/O)	TN-PN-130-M5	1.5
	NAPNTS-130B-3- □ (-T/O)		1.5
	NAPNTS-131-3- □ (-T/O)		1.5
	NAPNTS-133-3- □ (-T/O)		1.5
	NAPNTS-134-3- □ (-T/O)		1.5
NAPCTS-10-10-K(-T/O)	NAPCTS-10-10- □ (-T/O)	TN-PC-10-M5	1.5
	NAPCTS-15-10- □ (-T/O)		1.5
	NAPCTS-18-10- □ (-T/O)		1.5
	NAPCTS-20-10- □ (-T/O)		1.5
	NAPJTS-10-10- □ (-T/O)	TN-PF-15-M5	–
	NAPJTS-15-10- □ (-T/O)		–
	NAPNTS-109-10- □ (-T/O)	TN-PN-109-M5	1.5
	NAPNTS-114-10- □ (-T/O)	TN-PN-114-M5	1.5
	NAPNTS-116-10- □ (-T/O)	TN-PN-116-M5	1.5
	NAPNTS-117-10- □ (-T/O)		1.5
	NAPNTS-123-10- □ (-T/O)	TN-PN-123-M5	–
	NAPNTS-125-10- □ (-T/O)	TN-PN-116-M5	1.5
	NAPNTS-130A-10- □ (-T/O)	TN-PN-130-M5	1.5
	NAPNTS-130B-10- □ (-T/O)		1.5
	NAPNTS-131-10- □ (-T/O)		1.5
	NAPNTS-133-10- □ (-T/O)		1.5
	NAPNTS-134-10- □ (-T/O)		1.5
NAPCTS-10-15-K(-T/O)	NAPCTS-10-15- □ (-T/O)	TN-PC-10-M5	1.5
	NAPCTS-15-15- □ (-T/O)		1.5
	NAPCTS-18-15- □ (-T/O)		1.5
	NAPCTS-20-15- □ (-T/O)		1.5
	NAPJTS-10-15- □ (-T/O)	TN-PF-15-M5	–
	NAPJTS-15-15- □ (-T/O)		–
	NAPNTS-109-15- □ (-T/O)	TN-PN-109-M5	1.5
	NAPNTS-114-15- □ (-T/O)	TN-PN-114-M5	1.5
	NAPNTS-116-15- □ (-T/O)	TN-PN-116-M5	1.5
	NAPNTS-117-15- □ (-T/O)		1.5
	NAPNTS-123-15- □ (-T/O)	TN-PN-123-M5	–
	NAPNTS-125-15- □ (-T/O)	TN-PN-116-M5	1.5
	NAPNTS-130A-15- □ (-T/O)	TN-PN-130-M5	1.5
	NAPNTS-130B-15- □ (-T/O)		1.5
	NAPNTS-131-15- □ (-T/O)		1.5
	NAPNTS-133-15- □ (-T/O)		1.5
	NAPNTS-134-15- □ (-T/O)		1.5
NAPFTS-1.5A-3-K(-T/O)	NAPFTS-1.5A-3- □ (-T/O)	Attach the cup directly to the fitting	–
	NAPFTS-2A-3- □ (-T/O)		–
	NAPFTS-3.5A-3- □ (-T/O)		–
	NAPJTS-2-3- □ (-T/O)		–
	NAPJTS-4-3- □ (-T/O)		–
NAPFTS-1.5A-6-K(-T/O)	NAPFTS-1.5A-6- □ (-T/O)	Attach the cup directly to the fitting	–
	NAPFTS-2A-6- □ (-T/O)		–
	NAPFTS-3.5A-6- □ (-T/O)		–
	NAPJTS-2-6- □ (-T/O)		–
	NAPJTS-4-6- □ (-T/O)		–

Fitting model	Applicable cup with fitting	Setting screw model	Tightening torque (N・m)
NAPFTS-5A-3-K(-T/O)	NAPCTS-5-3- □ (-T/O)	Attach the cup directly to the fitting	–
	NAPCTS-7-3- □ (-T/O)		–
	NAPFTS-5A-3- □ (-T/O)		–
	NAPFTS-6A-3- □ (-T/O)		–
	NAPFTS-8A-3- □ (-T/O)		–
	NAPJTS-6-3- □ (-T/O)		–
	NAPJTS-8-3- □ (-T/O)		–
NAPFTS-5A-6-K(-T/O)	NAPCTS-5-6- □ (-T/O)	Attach the cup directly to the fitting	–
	NAPCTS-7-6- □ (-T/O)		–
	NAPFTS-5A-6- □ (-T/O)		–
	NAPFTS-6A-6- □ (-T/O)		–
	NAPFTS-8A-6- □ (-T/O)		–
	NAPJTS-6-6- □ (-T/O)		–
	NAPJTS-8-6- □ (-T/O)		–
NAPFTS-10A-3-K(-T/O)	NAPATS-10A-3- □ (-T/O)	Attach the cup directly to the fitting	–
	NAPATS-10B-3- □ (-T/O)		–
	NAPATS-15A-3- □ (-T/O)		–
	NAPATS-15B-3- □ (-T/O)		–
	NAPATS-20A-3- □ (-T/O)		–
	NAPATS-20B-3- □ (-T/O)		–
	NAPBTS-10A-3- □ (-T/O)		–
	NAPBTS-15A-3- □ (-T/O)		–
	NAPFTS-10A-3- □ (-T/O)		–
	NAPFTS-15A-3- □ (-T/O)		–
	NAPNTS-132-3- □ (-T/O)		–
NAPFTS-10A-10-K(-T/O)	NAPATS-10A-10- □ (-T/O)	Attach the cup directly to the fitting	–
	NAPATS-10B-10- □ (-T/O)		–
	NAPATS-15A-10- □ (-T/O)		–
	NAPATS-15B-10- □ (-T/O)		–
	NAPATS-20A-10- □ (-T/O)		–
	NAPATS-20B-10- □ (-T/O)		–
	NAPBTS-10A-10- □ (-T/O)		–
	NAPBTS-15A-10- □ (-T/O)		–
	NAPFTS-10A-10- □ (-T/O)		–
	NAPFTS-15A-10- □ (-T/O)		–
	NAPNTS-132-10- □ (-T/O)		–
NAPFTS-10A-15-K(-T/O)	NAPATS-10A-15- □ (-T/O)	Attach the cup directly to the fitting	–
	NAPATS-10B-15- □ (-T/O)		–
	NAPATS-15A-15- □ (-T/O)		–
	NAPATS-15B-15- □ (-T/O)		–
	NAPATS-20A-15- □ (-T/O)		–
	NAPATS-20B-15- □ (-T/O)		–
	NAPBTS-10A-15- □ (-T/O)		–
	NAPBTS-15A-15- □ (-T/O)		–
	NAPFTS-10A-15- □ (-T/O)		–
	NAPFTS-15A-15- □ (-T/O)		–
	NAPNTS-132-15- □ (-T/O)		–
NAPFTS-20B-6-K(-T/O)	NAPBTS-30-6- □ (-T/O)	TN-PF-25-M6	–
	NAPBTS-40-6- □ (-T/O)		–
	NAPBTS-50-6- □ (-T/O)	TN-PF-50-M6	–
	NAPCTS-30-6- □ (-T/O)	TN-PC-30-M6	–
	NAPCTS-40-6- □ (-T/O)		–
	NAPCTS-60-6- □ (-T/O)		–
	NAPDTS-20-6-(T/O)	TN-PF-25-M6	2.6
	NAPDTS-30-6-(T/O)		2.6
	NAPDTS-40-6-(T/O)		2.6
	NAPDTS-50-6-(T/O)	TN-PF-50-M6	2.6
	NAPFTS-20B-6- □ (-T/O)	TN-PF-25-M6	–
	NAPFTS-25-6- □ (-T/O)		–
	NAPFTS-30-6- □ (-T/O)		–
	NAPFTS-35-6- □ (-T/O)		–
	NAPFTS-40-6- □ (-T/O)		–
	NAPFTS-50-6- □ (-T/O)	TN-PF-50-M6	–
	NAPFOTS-25-6- □ (-T/O)	TN-PF-25-M6	–
	NAPFOTS-30-6- □ (-T/O)		–
	NAPFOTS-35-6- □ (-T/O)		–
	NAPFOTS-40-6- □ (-T/O)		–
	NAPHTS-30-6- □ (-T/O)		–
	NAPHTS-45-6- □ (-T/O)		–
	NAPJTS-30-6- □ (-T/O)		–
	NAPJTS-35-6- □ (-T/O)		–
	NAPJTS-40-6- □ (-T/O)		–
	NAPJTS-50-6- □ (-T/O)	TN-PF-50-M6	–
	NAPNTS-101-6- □ (-T/O)	TN-PN-101-M6	2.6
	NAPNTS-102-6- □ (-T/O)	TN-PN-102-M6	2.6
	NAPNTS-103-6- □ (-T/O)	TN-PN-103-M6	2.6
	NAPNTS-104-6- □ (-T/O)	TN-PN-104-M6	2.6
	NAPNTS-106-6- □ (-T/O)		2.6
	NAPNTS-110-6- □ (-T/O)		2.6
	NAPNTS-111-6- □ (-T/O)		2.6
	NAPNTS-112-6- □ (-T/O)	TN-PN-112-M6	2.6
	NAPNTS-122-6- □ (-T/O)	TN-PN-122-M6	2.6

※ The recommended torque is only for metal-to-metal tightening.
No recommended torque models shown as「–」.
※ (-T/O) indicates the connector. T：Barb, O：Push-in
※ □ in the table indicates the cup material.
※ NAPDTS needs holder for assembly. Refer to P.272 for detailed specifications.

Fitting model	Applicable cup with fitting	Setting screw model	Tightening torque (N・m)
NAPFTS-20B-15-K(-T/O)	NAPBTS-30-15- □ (-T/O)	TN-PF-25-M6	–
	NAPBTS-40-15- □ (-T/O)		–
	NAPBTS-50-15- □ (-T/O)	TN-PF-50-M6	–
	NAPCTS-30-15- □ (-T/O)	TN-PC-30-M6	–
	NAPCTS-40-15- □ (-T/O)		–
	NAPCTS-60-15- □ (-T/O)		–
	NAPDTS-20-15-(T/O)	TN-PF-25-M6	2.6
	NAPDTS-30-15-(T/O)		2.6
	NAPDTS-40-15-(T/O)		2.6
	NAPDTS-50-15-(T/O)	TN-PF-50-M6	2.6
	NAPFTS-20B-15- □ (-T/O)	TN-PF-25-M6	–
	NAPFTS-25-15- □ (-T/O)		–
	NAPFTS-30-15- □ (-T/O)		–
	NAPFTS-35-15- □ (-T/O)		–
	NAPFTS-40-15- □ (-T/O)		–
	NAPFTS-50-15- □ (-T/O)	TN-PF-50-M6	–
	NAPFOTS-25-15- □ (-T/O)	TN-PF-25-M6	–
	NAPFOTS-30-15- □ (-T/O)		–
	NAPFOTS-35-15- □ (-T/O)		–
	NAPFOTS-40-15- □ (-T/O)		–
	NAPHTS-30-15- □ (-T/O)		–
	NAPHTS-45-15- □ (-T/O)		–
	NAPJTS-30-15- □ (-T/O)		–
	NAPJTS-35-15- □ (-T/O)		–
	NAPJTS-40-15- □ (-T/O)		–
	NAPJTS-50-15- □ (-T/O)	TN-PF-50-M6	–
	NAPNTS-101-15- □ (-T/O)	TN-PN-101-M6	2.6
	NAPNTS-102-15- □ (-T/O)	TN-PN-102-M6	2.6
	NAPNTS-103-15- □ (-T/O)	TN-PN-103-M6	2.6
	NAPNTS-104-15- □ (-T/O)	TN-PN-104-M6	2.6
	NAPNTS-106-15- □ (-T/O)		2.6
	NAPNTS-110-15- □ (-T/O)		2.6
	NAPNTS-111-15- □ (-T/O)		2.6
	NAPNTS-112-15- □ (-T/O)	TN-PN-112-M6	2.6
	NAPNTS-122-15- □ (-T/O)	TN-PN-122-M6	2.6
NAPFTS-20B-30-K(-T/O)	NAPBTS-30-30- □ (-T/O)	TN-PF-25-M6	–
	NAPBTS-40-30- □ (-T/O)		–
	NAPBTS-50-30- □ (-T/O)	TN-PF-50-M6	–
	NAPCTS-30-30- □ (-T/O)	TN-PC-30-M6	–
	NAPCTS-40-30- □ (-T/O)		–
	NAPCTS-60-30- □ (-T/O)		–
	NAPDTS-20-30-(T/O)	TN-PF-25-M6	2.6
	NAPDTS-30-30-(T/O)		2.6
	NAPDTS-40-30-(T/O)		2.6
	NAPDTS-50-30-(T/O)	TN-PF-50-M6	2.6
	NAPFTS-20B-30- □ (-T/O)	TN-PF-25-M6	–
	NAPFTS-25-30- □ (-T/O)		–
	NAPFTS-30-30- □ (-T/O)		–
	NAPFTS-35-30- □ (-T/O)		–
	NAPFTS-40-30- □ (-T/O)		–
	NAPFTS-50-30- □ (-T/O)	TN-PF-50-M6	–
	NAPFOTS-25-30- □ (-T/O)	TN-PF-25-M6	–
	NAPFOTS-30-30- □ (-T/O)		–
	NAPFOTS-35-30- □ (-T/O)		–
	NAPFOTS-40-30- □ (-T/O)		–
	NAPHTS-30-30- □ (-T/O)		–
	NAPHTS-45-30- □ (-T/O)		–
	NAPJTS-30-30- □ (-T/O)		–
	NAPJTS-35-30- □ (-T/O)		–
	NAPJTS-40-30- □ (-T/O)		–
	NAPJTS-50-30- □ (-T/O)	TN-PF-50-M6	–
	NAPNTS-101-30- □ (-T/O)	TN-PN-101-M6	2.6
	NAPNTS-102-30- □ (-T/O)	TN-PN-102-M6	2.6
	NAPNTS-103-30- □ (-T/O)	TN-PN-103-M6	2.6
	NAPNTS-104-30- □ (-T/O)	TN-PN-104-M6	2.6
	NAPNTS-106-30- □ (-T/O)		2.6
	NAPNTS-110-30- □ (-T/O)		2.6
	NAPNTS-111-30- □ (-T/O)		2.6
	NAPNTS-112-30- □ (-T/O)	TN-PN-112-M6	2.6
	NAPNTS-122-30- □ (-T/O)	TN-PN-122-M6	2.6
NAPFTS-60-10-K	NAPBTS-75-10- □	Screw the fitting directly into the female screw in the cup	–
	NAPDTS-60-10	Screw the fitting directly into the holder	–
	NAPDTS-70-10		–
	NAPDTS-80-10		–
	NAPDTS-100-10		–
	NAPFTS-60-10- □	Screw the fitting directly into the female screw in the cup	–
	NAPFTS-80-10- □		–
	NAPFTS-95-10- □		–
	NAPHTS-65-10- □	TN-PH-65-M10	–
	NAPHTS-90-10- □		–
	NAPJTS-60-10- □	Screw the fitting directly into the female screw in the cup	–
	NAPJTS-70-10- □		–
	NAPJTS-80-10- □		–
	NAPNTS-107-10- □	TN-PN-107-M10	12.5
	NAPNTS-108-10- □	TN-PN-108-M10	12.5

※ The recommended torque is only for metal-to-metal tightening.
No recommended torque models shown as 「–」.
※ (-T/O) indicates the connector. T：Barb, O：Push-in
※ □ in the table indicates the cup material.
※ NAPDTS needs holder for assembly. Refer to P.272 for detailed specifications.

Fitting model	Applicable cup with fitting	Setting screw model	Tightening torque (N・m)
NAPFTS-60-30-K	NAPBTS-75-30- □	Screw the fitting directly into the female screw in the cup	–
	NAPDTS-60-30	Screw the fitting directly into the holder	–
	NAPDTS-70-30		–
	NAPDTS-80-30		–
	NAPDTS-100-30		–
	NAPFTS-60-30- □	Screw the fitting directly into the female screw in the cup	–
	NAPFTS-80-30- □		–
	NAPFTS-95-30- □		–
	NAPHTS-65-30- □	TN-PH-65-M10	–
	NAPHTS-90-30- □		–
	NAPJTS-60-30- □	Screw the fitting directly into the female screw in the cup	–
	NAPJTS-70-30- □		–
	NAPJTS-80-30- □		–
	NAPNTS-107-30- □	TN-PN-107-M10	12.5
	NAPNTS-108-30- □	TN-PN-108-M10	12.5
NAPFTS-60-50-K	NAPBTS-75-50- □	Screw the fitting directly into the female screw in the cup	–
	NAPDTS-60-50	Screw the fitting directly into the holder	–
	NAPDTS-70-50		–
	NAPDTS-80-50		–
	NAPDTS-100-50		–
	NAPFTS-60-50- □	Screw the fitting directly into the female screw in the cup	–
	NAPFTS-80-50- □		–
	NAPFTS-95-50- □		–
	NAPHTS-65-50- □	TN-PH-65-M10	–
	NAPHTS-90-50- □		–
	NAPJTS-60-50- □	Screw the fitting directly into the female screw in the cup	–
	NAPJTS-70-50- □		–
	NAPJTS-80-50- □		–
	NAPNTS-107-50- □	TN-PN-107-M10	12.5
	NAPNTS-108-50- □	TN-PN-108-M10	12.5
NAPFTS-120-20-K	NAPBTS-110-20- □	Mounting by bolts(4 pieces) those are attached to the fitting	–
	NAPBTS-150-20- □		–
	NAPFTS-120-20- □		–
	NAPFTS-150-20- □		–
	NAPFTS-200-20- □		–
NAPFTS-120-50-K	NAPBTS-110-50- □	Mounting by bolts(4 pieces) those are attached to the fitting	–
	NAPBTS-150-50- □		–
	NAPFTS-120-50- □		–
	NAPFTS-150-50- □		–
	NAPFTS-200-50- □		–
NAPUTSB-10-3-K(-T/O)	NAPUTSB-10-3- □ (-T/O)	Screw the fitting directly to PUGB	–
	NAPUTSB-15-3- □ (-T/O)		–
NAPUTSB-10-10-K(-T/O)	NAPUTSB-10-10- □ (-T/O)		–
	NAPUTSB-15-10- □ (-T/O)		–
NAPUTSB-10-15-K(-T/O)	NAPUTSB-10-15- □ (-T/O)		–
	NAPUTSB-15-15- □ (-T/O)		–
NAPUTSB-20-6-K(-T/O)	NAPUTSB-20-6- □ (-T/O)		–
	NAPUTSB-25-6- □ (-T/O)		–
	NAPUTSB-30-6- □ (-T/O)		–
	NAPUTSB-35-6- □ (-T/O)		–
NAPUTSB-20-15-K(-T/O)	NAPUTSB-20-15- □ (-T/O)		–
	NAPUTSB-25-15- □ (-T/O)		–
	NAPUTSB-30-15- □ (-T/O)		–
	NAPUTSB-35-15- □ (-T/O)		–
NAPUTSB-20-30-K(-T/O)	NAPUTSB-20-30- □ (-T/O)		–
	NAPUTSB-25-30- □ (-T/O)		–
	NAPUTSB-30-30- □ (-T/O)		–
	NAPUTSB-35-30- □ (-T/O)		–
NAPUTSB-40-6-K(-T/O)	NAPUTSB-40-6- □ (-T/O)		–
	NAPUTSB-50-6- □ (-T/O)		–
NAPUTSB-40-15-K(-T/O)	NAPUTSB-40-15- □ (-T/O)		–
	NAPUTSB-50-15- □ (-T/O)		–
NAPUTSB-40-30-K(-T/O)	NAPUTSB-40-30- □ (-T/O)		–
	NAPUTSB-50-30- □ (-T/O)		–
NAPUTSB-60-10-K	NAPCTS-90-10- □	TN-PC-90-M12	–
	NAPUTSB-60-10- □	Screw the fitting directly to PUGB	–
	NAPUTSB-80-10- □		–
	NAPUTSB-100-10- □		–
NAPUTSB-60-30-K	NAPCTS-90-30- □	TN-PC-90-M12	–
	NAPUTSB-60-30- □	Screw the fitting directly to PUGB	–
	NAPUTSB-80-30- □		–
	NAPUTSB-100-30- □		–
NAPUTSB-60-50-K	NAPCTS-90-50- □	TN-PC-90-M12	–
	NAPUTSB-60-50- □	Screw the fitting directly to PUGB	–
	NAPUTSB-80-50- □		–
	NAPUTSB-100-50- □		–
NAPUTSB-120-20-K	NAPUTSB-120-20- □		–
	NAPUTSB-150-20- □		–
NAPUTSB-120-50-K	NAPUTSB-120-50- □		–
	NAPUTSB-150-50- □		–
NAPUTSB-200-20-K	NAPUTSB-200-20- □		–
NAPUTSB-200-50-K	NAPUTSB-200-50- □		–
NAPUTSBR-60-10-K	NAPUTSBR-60-10- □		–
	NAPUTSBR-80-10- □		–
	NAPUTSBR-100-10- □		–
NAPUTSBR-60-30-K	NAPUTSBR-60-30- □		–
	NAPUTSBR-80-30- □		–
	NAPUTSBR-100-30- □		–
NAPUTSBR-60-50-K	NAPUTSBR-60-50- □		–
	NAPUTSBR-80-50- □		–
	NAPUTSBR-100-50- □		–
NAPUTSBR-120-20-K	NAPUTSBR-120-20- □		–
	NAPUTSBR-150-20- □		–
NAPUTSBR-120-50-K	NAPUTSBR-120-50- □		–
	NAPUTSBR-150-50- □		–
NAPUTSBR-200-20-K	NAPUTSBR-200-20- □		–
NAPUTSBR-200-50-K	NAPUTSBR-200-50- □		–

Fitting • Setting Screw • Cup with Fitting Application List

Spring Type • Side Port

Fitting model	Applicable cup with fitting	Setting screw model	Tightening torque (N・m)
NAPAYS-25-6-K(-T/O)	NAPAYS-25-6- □ (-T/O)	Screw the fitting directly into the male screw in the cup	2.6
	NAPAYS-30-6- □ (-T/O)		2.6
	NAPAYS-30B-6- □ (-T/O)	TN-PA-30-M6	2.6
	NAPAYS-40-6- □ (-T/O)	Screw the fitting directly into the male screw in the cup	2.6
	NAPAYS-50-6- □ (-T/O)		2.6
NAPAYS-25-15-K(-T/O)	NAPAYS-25-15- □ (-T/O)	Screw the fitting directly into the male screw in the cup	2.6
	NAPAYS-30-15- □ (-T/O)		2.6
	NAPAYS-30B-15- □ (-T/O)	TN-PA-30-M6	2.6
	NAPAYS-40-15- □ (-T/O)	Screw the fitting directly into the male screw in the cup	2.6
	NAPAYS-50-15- □ (-T/O)		2.6
NAPAYS-25-30-K(-T/O)	NAPAYS-25-30- □ (-T/O)	Screw the fitting directly into the male screw in the cup	2.6
	NAPAYS-30-30- □ (-T/O)		2.6
	NAPAYS-30B-30- □ (-T/O)	TN-PA-30-M6	2.6
	NAPAYS-40-30- □ (-T/O)	Screw the fitting directly into the male screw in the cup	2.6
	NAPAYS-50-30- □ (-T/O)		2.6
NAPBYS-20-6-K(T/O)	NAPBYS-20-6- □ (T/O)	TN-PF-20-M5	–
	NAPFOYS-20-6- □ (T/O)		–
	NAPJYS-20-6- □ (T/O)		–
	NAPJYS-25-6- □ (T/O)		–
	NAPNYS-121-6- □ (T/O)		–
NAPBYS-20-15-K(T/O)	NAPBYS-20-15- □ (T/O)	TN-PF-20-M5	–
	NAPFOYS-20-15- □ (T/O)		–
	NAPJYS-20-15- □ (T/O)		–
	NAPJYS-25-15- □ (T/O)		–
	NAPNYS-121-15- □ (T/O)		–
NAPBYS-20-30-K(T/O)	NAPBYS-20-30- □ (T/O)	TN-PF-20-M5	–
	NAPFOYS-20-30- □ (T/O)		–
	NAPJYS-20-30- □ (T/O)		–
	NAPJYS-25-30- □ (T/O)		–
	NAPNYS-121-30- □ (T/O)		–
NAPCYS-10-3-K(-T/O)	NAPCYS-10-3- □ (-T/O)	TN-PC-10-M5	1.5
	NAPCYS-15-3- □ (-T/O)		1.5
	NAPCYS-18-3- □ (-T/O)		1.5
	NAPCYS-20-3- □ (-T/O)		1.5
	NAPJYS-10-3- □ (-T/O)	TN-PF-15-M5	–
	NAPJYS-15-3- □ (-T/O)		–
	NAPNYS-109-3- □ (-T/O)	TN-PN-109-M5	1.5
	NAPNYS-114-3- □ (-T/O)	TN-PN-114-M5	1.5
	NAPNYS-116-3- □ (-T/O)	TN-PN-116-M5	1.5
	NAPNYS-117-3- □ (-T/O)		1.5
	NAPNYS-123-3- □ (-T/O)	TN-PN-123-M5	–
	NAPNYS-125-3- □ (-T/O)	TN-PN-116-M5	1.5
	NAPNYS-130A-3- □ (-T/O)	TN-PN-130-M5	1.5
	NAPNYS-130B-3- □ (-T/O)		1.5
	NAPNYS-131-3- □ (-T/O)		1.5
	NAPNYS-133-3- □ (-T/O)		1.5
	NAPNYS-134-3- □ (-T/O)		1.5
NAPCYS-10-10-K(-T/O)	NAPCYS-10-10- □ (-T/O)	TN-PC-10-M5	1.5
	NAPCYS-15-10- □ (-T/O)		1.5
	NAPCYS-18-10- □ (-T/O)		1.5
	NAPCYS-20-10- □ (-T/O)		1.5
	NAPJYS-10-10- □ (-T/O)	TN-PF-15-M5	–
	NAPJYS-15-10- □ (-T/O)		–
	NAPNYS-109-10- □ (-T/O)	TN-PN-109-M5	1.5
	NAPNYS-114-10- □ (-T/O)	TN-PN-114-M5	1.5
	NAPNYS-116-10- □ (-T/O)	TN-PN-116-M5	1.5
	NAPNYS-117-10- □ (-T/O)		1.5
	NAPNYS-123-10- □ (-T/O)	TN-PN-123-M5	–
	NAPNYS-125-10- □ (-T/O)	TN-PN-116-M5	1.5
	NAPNYS-130A-10- □ (-T/O)	TN-PN-130-M5	1.5
	NAPNYS-130B-10- □ (-T/O)		1.5
	NAPNYS-131-10- □ (-T/O)		1.5
	NAPNYS-133-10- □ (-T/O)		1.5
	NAPNYS-134-10- □ (-T/O)		1.5
NAPCYS-10-15-K(-T/O)	NAPCYS-10-15- □ (-T/O)	TN-PC-10-M5	1.5
	NAPCYS-15-15- □ (-T/O)		1.5
	NAPCYS-18-15- □ (-T/O)		1.5
	NAPCYS-20-15- □ (-T/O)		1.5
	NAPJYS-10-15- □ (-T/O)	TN-PF-15-M5	–
	NAPJYS-15-15- □ (-T/O)		–
	NAPNYS-109-15- □ (-T/O)	TN-PN-109-M5	1.5
	NAPNYS-114-15- □ (-T/O)	TN-PN-114-M5	1.5
	NAPNYS-116-15- □ (-T/O)	TN-PN-116-M5	1.5
	NAPNYS-117-15- □ (-T/O)		1.5
	NAPNYS-123-15- □ (-T/O)	TN-PN-123-M5	–
	NAPNYS-125-15- □ (-T/O)	TN-PN-116-M5	1.5
	NAPNYS-130A-15- □ (-T/O)	TN-PN-130-M5	1.5
	NAPNYS-130B-15- □ (-T/O)		1.5
	NAPNYS-131-15- □ (-T/O)		1.5
	NAPNYS-133-15- □ (-T/O)		1.5
	NAPNYS-134-15- □ (-T/O)		1.5
NAPFYS-1.5A-3-K(-T/O)	NAPFYS-1.5A-3- □ (-T/O)	Attach the cup directly to the fitting	–
	NAPFYS-2A-3- □ (-T/O)		–
	NAPFYS-3.5A-3- □ (-T/O)		–
	NAPJYS-2-3- □ (-T/O)		–
	NAPJYS-4-3- □ (-T/O)		–
NAPFYS-1.5A-6-K(-T/O)	NAPFYS-1.5A-6- □ (-T/O)	Attach the cup directly to the fitting	–
	NAPFYS-2A-6- □ (-T/O)		–
	NAPFYS-3.5A-6- □ (-T/O)		–
	NAPJYS-2-6- □ (-T/O)		–
	NAPJYS-4-6- □ (-T/O)		–

Fitting model	Applicable cup with fitting	Setting screw model	Tightening torque (N・m)
NAPFYS-5A-3-K(-T/O)	NAPCYS-5-3- □ (-T/O)	Attach the cup directly to the fitting	–
	NAPCYS-7-3- □ (-T/O)		–
	NAPFYS-5A-3- □ (-T/O)		–
	NAPFYS-6A-3- □ (-T/O)		–
	NAPFYS-8A-3- □ (-T/O)		–
	NAPJYS-6-3- □ (-T/O)		–
	NAPJYS-8-3- □ (-T/O)		–
NAPFYS-5A-6-K(-T/O)	NAPCYS-5-6- □ (-T/O)	Attach the cup directly to the fitting	–
	NAPCYS-7-6- □ (-T/O)		–
	NAPFYS-5A-6- □ (-T/O)		–
	NAPFYS-6A-6- □ (-T/O)		–
	NAPFYS-8A-6- □ (-T/O)		–
	NAPJYS-6-6- □ (-T/O)		–
	NAPJYS-8-6- □ (-T/O)		–
NAPFYS-10A-3-K(-T/O)	NAPAYS-10A-3- □ (-T/O)	Attach the cup directly to the fitting	–
	NAPAYS-10B-3- □ (-T/O)		–
	NAPAYS-15A-3- □ (-T/O)		–
	NAPAYS-15B-3- □ (-T/O)		–
	NAPAYS-20A-3- □ (-T/O)		–
	NAPAYS-20B-3- □ (-T/O)		–
	NAPBYS-10A-3- □ (-T/O)		–
	NAPBYS-15A-3- □ (-T/O)		–
	NAPFYS-10A-3- □ (-T/O)		–
	NAPFYS-15A-3- □ (-T/O)		–
	NAPNYS-132-3- □ (-T/O)		–
NAPFYS-10A-10-K(-T/O)	NAPAYS-10A-10- □ (-T/O)	Attach the cup directly to the fitting	–
	NAPAYS-10B-10- □ (-T/O)		–
	NAPAYS-15A-10- □ (-T/O)		–
	NAPAYS-15B-10- □ (-T/O)		–
	NAPAYS-20A-10- □ (-T/O)		–
	NAPAYS-20B-10- □ (-T/O)		–
	NAPBYS-10A-10- □ (-T/O)		–
	NAPBYS-15A-10- □ (-T/O)		–
	NAPFYS-10A-10- □ (-T/O)		–
	NAPFYS-15A-10- □ (-T/O)		–
	NAPNYS-132-10- □ (-T/O)		–
NAPFYS-10A-15-K(-T/O)	NAPAYS-10A-15- □ (-T/O)	Attach the cup directly to the fitting	–
	NAPAYS-10B-15- □ (-T/O)		–
	NAPAYS-15A-15- □ (-T/O)		–
	NAPAYS-15B-15- □ (-T/O)		–
	NAPAYS-20A-15- □ (-T/O)		–
	NAPAYS-20B-15- □ (-T/O)		–
	NAPBYS-10A-15- □ (-T/O)		–
	NAPBYS-15A-15- □ (-T/O)		–
	NAPFYS-10A-15- □ (-T/O)		–
	NAPFYS-15A-15- □ (-T/O)		–
	NAPNYS-132-15- □ (-T/O)		–
NAPFYS-20B-6-K(-T/O)	NAPBYS-30-6- □ (-T/O)	TN-PF-25-M6	–
	NAPBYS-40-6- □ (-T/O)		–
	NAPBYS-50-6- □ (-T/O)	TN-PF-50-M6	–
	NAPCYS-30-6- □ (-T/O)	TN-PC-30-M6	–
	NAPCYS-40-6- □ (-T/O)		–
	NAPCYS-60-6- □ (-T/O)		–
	NAPDYS-20-6-(T/O)	TN-PF-25-M6	2.6
	NAPDYS-30-6-(T/O)		2.6
	NAPDYS-40-6-(T/O)		2.6
	NAPDYS-50-6-(T/O)	TN-PF-50-M6	2.6
	NAPFYS-20B-6- □ (-T/O)	TN-PF-25-M6	–
	NAPFYS-25-6- □ (-T/O)		–
	NAPFYS-30-6- □ (-T/O)		–
	NAPFYS-35-6- □ (-T/O)		–
	NAPFYS-40-6- □ (-T/O)		–
	NAPFYS-50-6- □ (-T/O)	TN-PF-50-M6	–
	NAPFOYS-25-6- □ (-T/O)	TN-PF-25-M6	–
	NAPFOYS-30-6- □ (-T/O)		–
	NAPFOYS-35-6- □ (-T/O)		–
	NAPFOYS-40-6- □ (-T/O)		–
	NAPHYS-30-6- □ (-T/O)		–
	NAPHYS-45-6- □ (-T/O)		–
	NAPJYS-30-6- □ (-T/O)		–
	NAPJYS-35-6- □ (-T/O)		–
	NAPJYS-40-6- □ (-T/O)		–
	NAPJYS-50-6- □ (-T/O)	TN-PF-50-M6	–
	NAPNYS-101-6- □ (-T/O)	TN-PN-101-M6	2.6
	NAPNYS-102-6- □ (-T/O)	TN-PN-102-M6	2.6
	NAPNYS-103-6- □ (-T/O)	TN-PN-103-M6	2.6
	NAPNYS-104-6- □ (-T/O)	TN-PN-104-M6	2.6
	NAPNYS-106-6- □ (-T/O)		2.6
	NAPNYS-110-6- □ (-T/O)		2.6
	NAPNYS-111-6- □ (-T/O)		2.6
	NAPNYS-112-6- □ (-T/O)	TN-PN-112-M6	2.6
	NAPNYS-122-6- □ (-T/O)	TN-PN-122-M6	2.6

※ The recommended torque is only for metal-to-metal tightening.
No recommended torque models shown as「–」.
※ (-T/O) indicates the connector. T：Barb, O：Push-in
※ □ in the table indicates the cup material.
※ NAPDYS needs holder for assembly. Refer to P.272 for detailed specifications.

Fitting model	Applicable cup with fitting	Setting screw model	Tightening torque (N・m)
NAPFYS-20B-15-K(-T/O)	NAPBYS-30-15- □ (-T/O)	TN-PF-25-M6	–
	NAPBYS-40-15- □ (-T/O)		–
	NAPBYS-50-15- □ (-T/O)	TN-PF-50-M6	–
	NAPCYS-30-15- □ (-T/O)	TN-PC-30-M6	–
	NAPCYS-40-15- □ (-T/O)		–
	NAPCYS-60-15- □ (-T/O)		–
	NAPDYS-20-15-(T/O)	TN-PF-25-M6	2.6
	NAPDYS-30-15-(T/O)		2.6
	NAPDYS-40-15-(T/O)		2.6
	NAPDYS-50-15-(T/O)	TN-PF-50-M6	2.6
	NAPFYS-20B-15- □ (-T/O)	TN-PF-25-M6	–
	NAPFYS-25-15- □ (-T/O)		–
	NAPFYS-30-15- □ (-T/O)		–
	NAPFYS-35-15- □ (-T/O)		–
	NAPFYS-40-15- □ (-T/O)		–
	NAPFYS-50-15- □ (-T/O)	TN-PF-50-M6	–
	NAPFOYS-25-15- □ (-T/O)	TN-PF-25-M6	–
	NAPFOYS-30-15- □ (-T/O)		–
	NAPFOYS-35-15- □ (-T/O)		–
	NAPFOYS-40-15- □ (-T/O)		–
	NAPHYS-30-15- □ (-T/O)		–
	NAPHYS-45-15- □ (-T/O)		–
	NAPJYS-30-15- □ (-T/O)		–
	NAPJYS-35-15- □ (-T/O)		–
	NAPJYS-40-15- □ (-T/O)		–
	NAPJYS-50-15- □ (-T/O)	TN-PF-50-M6	–
	NAPNYS-101-15- □ (-T/O)	TN-PN-101-M6	2.6
	NAPNYS-102-15- □ (-T/O)	TN-PN-102-M6	2.6
	NAPNYS-103-15- □ (-T/O)	TN-PN-103-M6	2.6
	NAPNYS-104-15- □ (-T/O)	TN-PN-104-M6	2.6
	NAPNYS-106-15- □ (-T/O)		2.6
	NAPNYS-110-15- □ (-T/O)		2.6
	NAPNYS-111-15- □ (-T/O)		2.6
	NAPNYS-112-15- □ (-T/O)	TN-PN-112-M6	2.6
	NAPNYS-122-15- □ (-T/O)	TN-PN-122-M6	2.6
NAPFYS-20B-30-K(-T/O)	NAPBYS-30-30- □ (-T/O)	TN-PF-25-M6	–
	NAPBYS-40-30- □ (-T/O)		–
	NAPBYS-50-30- □ (-T/O)	TN-PF-50-M6	–
	NAPCYS-30-30- □ (-T/O)	TN-PC-30-M6	–
	NAPCYS-40-30- □ (-T/O)		–
	NAPCYS-60-30- □ (-T/O)		–
	NAPDYS-20-30-(T/O)	TN-PF-25-M6	2.6
	NAPDYS-30-30-(T/O)		2.6
	NAPDYS-40-30-(T/O)		2.6
	NAPDYS-50-30-(T/O)	TN-PF-50-M6	2.6
	NAPFYS-20B-30- □ (-T/O)	TN-PF-25-M6	–
	NAPFYS-25-30- □ (-T/O)		–
	NAPFYS-30-30- □ (-T/O)		–
	NAPFYS-35-30- □ (-T/O)		–
	NAPFYS-40-30- □ (-T/O)		–
	NAPFYS-50-30- □ (-T/O)	TN-PF-50-M6	–
	NAPFOYS-25-30- □ (-T/O)	TN-PF-25-M6	–
	NAPFOYS-30-30- □ (-T/O)		–
	NAPFOYS-35-30- □ (-T/O)		–
	NAPFOYS-40-30- □ (-T/O)		–
	NAPHYS-30-30- □ (-T/O)		–
	NAPHYS-45-30- □ (-T/O)		–
	NAPJYS-30-30- □ (-T/O)		–
	NAPJYS-35-30- □ (-T/O)		–
	NAPJYS-40-30- □ (-T/O)		–
	NAPJYS-50-30- □ (-T/O)	TN-PF-50-M6	–
	NAPNYS-101-30- □ (-T/O)	TN-PN-101-M6	2.6
	NAPNYS-102-30- □ (-T/O)	TN-PN-102-M6	2.6
	NAPNYS-103-30- □ (-T/O)	TN-PN-103-M6	2.6
	NAPNYS-104-30- □ (-T/O)	TN-PN-104-M6	2.6
	NAPNYS-106-30- □ (-T/O)		2.6
	NAPNYS-110-30- □ (-T/O)		2.6
	NAPNYS-111-30- □ (-T/O)		2.6
	NAPNYS-112-30- □ (-T/O)	TN-PN-112-M6	2.6
	NAPNYS-122-30- □ (-T/O)	TN-PN-122-M6	2.6
NAPFYS-60-10-K	NAPBYS-75-10- □	Screw the fitting directly into the female screw in the cup	–
	NAPDYS-60-10	Screw the fitting directly into the holder	–
	NAPDYS-70-10		–
	NAPDYS-80-10		–
	NAPDYS-100-10		–
	NAPFYS-60-10- □	Screw the fitting directly into the female screw in the cup	–
	NAPFYS-80-10- □		–
	NAPFYS-95-10- □		–
	NAPHYS-65-10- □	TN-PH-65-M10	–
	NAPHYS-90-10- □		–
	NAPJYS-60-10- □	Screw the fitting directly into the female screw in the cup	–
	NAPJYS-70-10- □		–
	NAPJYS-80-10- □		–
	NAPNYS-107-10- □	TN-PN-107-M10	12.5
	NAPNYS-108-10- □	TN-PN-108-M10	12.5

※ The recommended torque is only for metal-to-metal tightening.
No recommended torque models shown as 「–」.
※ (-T/O) indicates the connector. T : Barb, O : Push-in
※ □ in the table indicates the cup material.
※ NAPDYS needs holder for assembly. Refer to P.272 for detailed specifications.

Fitting model	Applicable cup with fitting	Setting screw model	Tightening torque (N・m)
NAPFYS-60-30-K	NAPBYS-75-30- □	Screw the fitting directly into the female screw in the cup	–
	NAPDYS-60-30	Screw the fitting directly into the holder	–
	NAPDYS-70-30		–
	NAPDYS-80-30		–
	NAPDYS-100-30		–
	NAPFYS-60-30- □	Screw the fitting directly into the female screw in the cup	–
	NAPFYS-80-30- □		–
	NAPFYS-95-30- □		–
	NAPHYS-65-30- □	TN-PH-65-M10	–
	NAPHYS-90-30- □		–
	NAPJYS-60-30- □	Screw the fitting directly into the female screw in the cup	–
	NAPJYS-70-30- □		–
	NAPJYS-80-30- □		–
	NAPNYS-107-30- □	TN-PN-107-M10	12.5
	NAPNYS-108-30- □	TN-PN-108-M10	12.5
NAPFYS-60-50-K	NAPBYS-75-50- □	Screw the fitting directly into the female screw in the cup	–
	NAPDYS-60-50	Screw the fitting directly into the holder	–
	NAPDYS-70-50		–
	NAPDYS-80-50		–
	NAPDYS-100-50		–
	NAPFYS-60-50- □	Screw the fitting directly into the female screw in the cup	–
	NAPFYS-80-50- □		–
	NAPFYS-95-50- □		–
	NAPHYS-65-50- □	TN-PH-65-M10	–
	NAPHYS-90-50- □		–
	NAPJYS-60-50- □	Screw the fitting directly into the female screw in the cup	–
	NAPJYS-70-50- □		–
	NAPJYS-80-50- □		–
	NAPNYS-107-50- □	TN-PN-107-M10	12.5
	NAPNYS-108-50- □	TN-PN-108-M10	12.5
NAPFYS-120-20-K	NAPBYS-110-20- □	Mounting by bolts(4 pieces) those are attached to the fitting	–
	NAPBYS-150-20- □		–
	NAPFYS-120-20- □		–
	NAPFYS-150-20- □		–
	NAPFYS-200-20- □		–
NAPFYS-120-50-K	NAPBYS-110-50- □	Mounting by bolts(4 pieces) those are attached to the fitting	–
	NAPBYS-150-50- □		–
	NAPFYS-120-50- □		–
	NAPFYS-150-50- □		–
	NAPFYS-200-50- □		–
NAPUYSB-10-3-K(-T/O)	NAPUYSB-10-3- □ (-T/O)	Screw the fitting directly to PUGB	–
	NAPUYSB-15-3- □ (-T/O)		–
NAPUYSB-10-10-K(-T/O)	NAPUYSB-10-10- □ (-T/O)		–
	NAPUYSB-15-10- □ (-T/O)		–
NAPUYSB-10-15-K(-T/O)	NAPUYSB-10-15- □ (-T/O)		–
	NAPUYSB-15-15- □ (-T/O)		–
NAPUYSB-20-6-K(-T/O)	NAPUYSB-20-6- □ (-T/O)		–
	NAPUYSB-25-6- □ (-T/O)		–
	NAPUYSB-30-6- □ (-T/O)		–
	NAPUYSB-35-6- □ (-T/O)		–
NAPUYSB-20-15-K(-T/O)	NAPUYSB-20-15- □ (-T/O)		–
	NAPUYSB-25-15- □ (-T/O)		–
	NAPUYSB-30-15- □ (-T/O)		–
	NAPUYSB-35-15- □ (-T/O)		–
NAPUYSB-20-30-K(-T/O)	NAPUYSB-20-30- □ (-T/O)		–
	NAPUYSB-25-30- □ (-T/O)		–
	NAPUYSB-30-30- □ (-T/O)		–
	NAPUYSB-35-30- □ (-T/O)		–
NAPUYSB-40-6-K(-T/O)	NAPUYSB-40-6- □ (-T/O)		–
	NAPUYSB-50-6- □ (-T/O)		–
NAPUYSB-40-15-K(-T/O)	NAPUYSB-40-15- □ (-T/O)		–
	NAPUYSB-50-15- □ (-T/O)		–
NAPUYSB-40-30-K(-T/O)	NAPUYSB-40-30- □ (-T/O)		–
	NAPUYSB-50-30- □ (-T/O)		–
NAPUYSB-60-10-K	NAPCYS-90-10- □	TN-PC-90-M12	–
	NAPUYSB-60-10- □	Screw the fitting directly to PUGB	–
	NAPUYSB-80-10- □		–
	NAPUYSB-100-10- □		–
NAPUYSB-60-30-K	NAPCYS-90-30- □	TN-PC-90-M12	–
	NAPUYSB-60-30- □	Screw the fitting directly to PUGB	–
	NAPUYSB-80-30- □		–
	NAPUYSB-100-30- □		–
NAPUYSB-60-50-K	NAPCYS-90-50- □	TN-PC-90-M12	–
	NAPUYSB-60-50- □	Screw the fitting directly to PUGB	–
	NAPUYSB-80-50- □		–
	NAPUYSB-100-50- □		–
NAPUYSB-120-20-K	NAPUYSB-120-20- □		–
	NAPUYSB-150-20- □		–
NAPUYSB-120-50-K	NAPUYSB-120-50- □		–
	NAPUYSB-150-50- □		–
NAPUYSB-200-20-K	NAPUYSB-200-20- □		–
NAPUYSB-200-50-K	NAPUYSB-200-50- □		–
NAPUYSBR-60-10-K	NAPUYSBR-60-10- □		–
	NAPUYSBR-80-10- □		–
	NAPUYSBR-100-10- □		–
NAPUYSBR-60-30-K	NAPUYSBR-60-30- □		–
	NAPUYSBR-80-30- □		–
	NAPUYSBR-100-30- □		–
NAPUYSBR-60-50-K	NAPUYSBR-60-50- □		–
	NAPUYSBR-80-50- □		–
	NAPUYSBR-100-50- □		–
NAPUYSBR-120-20-K	NAPUYSBR-120-20- □		–
	NAPUYSBR-150-20- □		–
NAPUYSBR-120-50-K	NAPUYSBR-120-50- □		–
	NAPUYSBR-150-50- □		–
NAPUYSBR-200-20-K	NAPUYSBR-200-20- □		–
NAPUYSBR-200-50-K	NAPUYSBR-200-50- □		–

Fitting • Setting Screw • Cup with Fitting Application List

Non-rotation Spring Type • Top Port

Fitting model	Applicable cup with fitting	Setting screw model	Tightening torque (N・m)
NAPATH-25-6-K(-T/O)	NAPATH-25-6- □ (-T/O)	Screw the fitting directly into the male screw in the cup	2.6
	NAPATH-30-6- □ (-T/O)		2.6
	NAPATH-30B-6- □ (-T/O)	TN-PA-30-M6	2.6
	NAPATH-40-6- □ (-T/O)	Screw the fitting directly into the male screw in the cup	2.6
	NAPATH-50-6- □ (-T/O)		2.6
NAPATH-25-15-K(-T/O)	NAPATH-25-15- □ (-T/O)	Screw the fitting directly into the male screw in the cup	2.6
	NAPATH-30-15- □ (-T/O)		2.6
	NAPATH-30B-15- □ (-T/O)	TN-PA-30-M6	2.6
	NAPATH-40-15- □ (-T/O)	Screw the fitting directly into the male screw in the cup	2.6
	NAPATH-50-15- □ (-T/O)		2.6
NAPATH-25-30-K(-T/O)	NAPATH-25-30- □ (-T/O)	Screw the fitting directly into the male screw in the cup	2.6
	NAPATH-30-30- □ (-T/O)		2.6
	NAPATH-30B-30- □ (-T/O)	TN-PA-30-M6	2.6
	NAPATH-40-30- □ (-T/O)	Screw the fitting directly into the male screw in the cup	2.6
	NAPATH-50-30- □ (-T/O)		2.6
NAPBTH-20-6-K(-T/O)	NAPBTH-20-6- □ (-T/O)	TN-PF-20-M5	–
	NAPFOTH-20-6- □ (-T/O)		–
	NAPJTH-20-6- □ (-T/O)		–
	NAPJTH-25-6- □ (-T/O)		–
	NAPNTH-121-6- □ (-T/O)		–
	NAPRTH-9.5X25-6- □ (-T/O)	TN-PR-15-M5	1.5
	NAPRTH-12.5X23-6- □ (-T/O)	TN-PF-15-M5	–
	NAPRTH-15X30-6- □ (-T/O)	TN-PR-15-M5	1.5
	NAPRTH-32X32-6- □ (-T/O)	TN-PF-20-M5	–
NAPBTH-20-15-K(-T/O)	NAPBTH-20-15- □ (-T/O)	TN-PF-20-M5	–
	NAPFOTH-20-15- □ (-T/O)		–
	NAPJTH-20-15- □ (-T/O)		–
	NAPJTH-25-15- □ (-T/O)		–
	NAPNTH-121-15- □ (-T/O)		–
	NAPRTH-9.5X25-15- □ (-T/O)	TN-PR-15-M5	1.5
	NAPRTH-12.5X23-15- □ (-T/O)	TN-PF-15-M5	–
	NAPRTH-15X30-15- □ (-T/O)	TN-PR-15-M5	1.5
	NAPRTH-32X32-15- □ (-T/O)	TN-PF-20-M5	–
NAPBTH-20-30-K(-T/O)	NAPBTH-20-30- □ (-T/O)	TN-PF-20-M5	–
	NAPFOTH-20-30- □ (-T/O)		–
	NAPJTH-20-30- □ (-T/O)		–
	NAPJTH-25-30- □ (-T/O)		–
	NAPNTH-121-30- □ (-T/O)		–
	NAPRTH-9.5X25-30- □ (-T/O)	TN-PR-15-M5	1.5
	NAPRTH-12.5X23-30- □ (-T/O)	TN-PF-15-M5	–
	NAPRTH-15X30-30- □ (-T/O)	TN-PR-15-M5	1.5
	NAPRTH-32X32-30- □ (-T/O)	TN-PF-20-M5	–
NAPCTH-5-3-K(-T/O)	NAPCTH-5-3- □ (-T/O)	Attach the cup directly to the fitting	–
	NAPCTH-7-3- □ (-T/O)		–
NAPCTH-5-10-K(-T/O)	NAPCTH-5-10- □ (-T/O)		–
	NAPCTH-7-10- □ (-T/O)		–
NAPCTH-5-15-K(-T/O)	NAPCTH-5-15- □ (-T/O)		–
	NAPCTH-7-15- □ (-T/O)		–
NAPCTH-10-3-K(-T/O)	NAPCTH-10-3- □ (-T/O)	TN-PC-10-M5	1.5
	NAPCTH-15-3- □ (-T/O)		1.5
	NAPCTH-18-3- □ (-T/O)		1.5
	NAPCTH-20-3- □ (-T/O)		1.5
	NAPJTH-10-3- □ (-T/O)	TN-PF-15-M5	–
	NAPJTH-15-3- □ (-T/O)		–
	NAPNTH-109-3- □ (-T/O)	TN-PN-109-M5	1.5
	NAPNTH-114-3- □ (-T/O)	TN-PN-114-M5	1.5
	NAPNTH-116-3- □ (-T/O)	TN-PN-116-M5	1.5
	NAPNTH-117-3- □ (-T/O)		1.5
	NAPNTH-123-3- □ (-T/O)	TN-PN-123-M5	–
	NAPNTH-125-3- □ (-T/O)	TN-PN-116-M5	1.5
	NAPNTH-130A-3- □ (-T/O)	TN-PN-130-M5	1.5
	NAPNTH-130B-3- □ (-T/O)		1.5
	NAPNTH-131-3- □ (-T/O)		1.5
	NAPNTH-133-3- □ (-T/O)		1.5
	NAPNTH-134-3- □ (-T/O)		1.5
NAPCTH-10-10-K(-T/O)	NAPCTH-10-10- □ (-T/O)	TN-PC-10-M5	1.5
	NAPCTH-15-10- □ (-T/O)		1.5
	NAPCTH-18-10- □ (-T/O)		1.5
	NAPCTH-20-10- □ (-T/O)		1.5
	NAPJTH-10-10- □ (-T/O)	TN-PF-15-M5	–
	NAPJTH-15-10- □ (-T/O)		–
	NAPNTH-109-10- □ (-T/O)	TN-PN-109-M5	1.5
	NAPNTH-114-10- □ (-T/O)	TN-PN-114-M5	1.5
	NAPNTH-116-10- □ (-T/O)	TN-PN-116-M5	1.5
	NAPNTH-117-10- □ (-T/O)		1.5
	NAPNTH-123-10- □ (-T/O)	TN-PN-123-M5	–
	NAPNTH-125-10- □ (-T/O)	TN-PN-116-M5	1.5
	NAPNTH-130A-10- □ (-T/O)	TN-PN-130-M5	1.5
	NAPNTH-130B-10- □ (-T/O)		1.5
	NAPNTH-131-10- □ (-T/O)		1.5
	NAPNTH-133-10- □ (-T/O)		1.5
	NAPNTH-134-10- □ (-T/O)		1.5

Fitting model	Applicable cup with fitting	Setting screw model	Tightening torque (N・m)
NAPCTH-10-15-K(-T/O)	NAPCTH-10-15- □ (-T/O)	TN-PC-10-M5	1.5
	NAPCTH-15-15- □ (-T/O)		1.5
	NAPCTH-18-15- □ (-T/O)		1.5
	NAPCTH-20-15- □ (-T/O)		1.5
	NAPJTH-10-15- □ (-T/O)	TN-PF-15-M5	–
	NAPJTH-15-15- □ (-T/O)		–
	NAPNTH-109-15- □ (-T/O)	TN-PN-109-M5	1.5
	NAPNTH-114-15- □ (-T/O)	TN-PN-114-M5	1.5
	NAPNTH-116-15- □ (-T/O)	TN-PN-116-M5	1.5
	NAPNTH-117-15- □ (-T/O)		1.5
	NAPNTH-123-15- □ (-T/O)	TN-PN-123-M5	–
	NAPNTH-125-15- □ (-T/O)	TN-PN-116-M5	1.5
	NAPNTH-130A-15- □ (-T/O)	TN-PN-130-M5	1.5
	NAPNTH-130B-15- □ (-T/O)		1.5
	NAPNTH-131-15- □ (-T/O)		1.5
	NAPNTH-133-15- □ (-T/O)		1.5
	NAPNTH-134-15- □ (-T/O)		1.5
NAPFTH-1.5A-3-K(-T/O)	NAPFTH-1.5A-3- □ (-T/O)	Attach the cup directly to the fitting	–
	NAPFTH-2A-3- □ (-T/O)		–
	NAPFTH-3.5A-3- □ (-T/O)		–
	NAPJTH-2-3- □ (-T/O)		–
	NAPJTH-4-3- □ (-T/O)		–
NAPFTH-1.5A-10-K(-T/O)	NAPFTH-1.5A-10- □ (-T/O)	Attach the cup directly to the fitting	–
	NAPFTH-2A-10- □ (-T/O)		–
	NAPFTH-3.5A-10- □ (-T/O)		–
	NAPJTH-2-10- □ (-T/O)		–
	NAPJTH-4-10- □ (-T/O)		–
NAPFTH-1.5A-15-K(-T/O)	NAPFTH-1.5A-15- □ (-T/O)	Attach the cup directly to the fitting	–
	NAPFTH-2A-15- □ (-T/O)		–
	NAPFTH-3.5A-15- □ (-T/O)		–
	NAPJTH-2-15- □ (-T/O)		–
	NAPJTH-4-15- □ (-T/O)		–
NAPFTH-2X4A-3-K(-T/O)	NAPFTH-2X4A-3- □ (-T/O)	Attach the cup directly to the fitting	–
	NAPFTH-3.5X7A-3- □ (-T/O)		–
NAPFTH-2X4A-10-K(-T/O)	NAPFTH-2X4A-10- □ (-T/O)	Attach the cup directly to the fitting	–
	NAPFTH-3.5X7A-10- □ (-T/O)		–
NAPFTH-2X4A-15-K(-T/O)	NAPFTH-2X4A-15- □ (-T/O)	Attach the cup directly to the fitting	–
	NAPFTH-3.5X7A-15- □ (-T/O)		–
NAPFTH-5A-3-K(-T/O)	NAPATH-10A-3- □ (-T/O)	Attach the cup directly to the fitting	–
	NAPATH-10B-3- □ (-T/O)		–
	NAPATH-15A-3- □ (-T/O)		–
	NAPATH-15B-3- □ (-T/O)		–
	NAPATH-20A-3- □ (-T/O)		–
	NAPATH-20B-3- □ (-T/O)		–
	NAPBTH-10A-3- □ (-T/O)		–
	NAPBTH-15A-3- □ (-T/O)		–
	NAPFTH-5A-3- □ (-T/O)		–
	NAPFTH-6A-3- □ (-T/O)		–
	NAPFTH-8A-3- □ (-T/O)		–
	NAPFTH-10A-3- □ (-T/O)		–
	NAPFTH-15A-3- □ (-T/O)		–
	NAPJTH-6-3- □ (-T/O)		–
	NAPJTH-8-3- □ (-T/O)		–
	NAPNTH-132-3- □ (-T/O)		–
NAPFTH-5A-10-K(-T/O)	NAPATH-10A-10- □ (-T/O)	Attach the cup directly to the fitting	–
	NAPATH-10B-10- □ (-T/O)		–
	NAPATH-15A-10- □ (-T/O)		–
	NAPATH-15B-10- □ (-T/O)		–
	NAPATH-20A-10- □ (-T/O)		–
	NAPATH-20B-10- □ (-T/O)		–
	NAPBTH-10A-10- □ (-T/O)		–
	NAPBTH-15A-10- □ (-T/O)		–
	NAPFTH-5A-10- □ (-T/O)		–
	NAPFTH-6A-10- □ (-T/O)		–
	NAPFTH-8A-10- □ (-T/O)		–
	NAPFTH-10A-10- □ (-T/O)		–
	NAPFTH-15A-10- □ (-T/O)		–
	NAPJTH-6-10- □ (-T/O)		–
	NAPJTH-8-10- □ (-T/O)		–
	NAPNTH-132-10- □ (-T/O)		–
NAPFTH-5A-15-K(-T/O)	NAPATH-10A-15- □ (-T/O)	Attach the cup directly to the fitting	–
	NAPATH-10B-15- □ (-T/O)		–
	NAPATH-15A-15- □ (-T/O)		–
	NAPATH-15B-15- □ (-T/O)		–
	NAPATH-20A-15- □ (-T/O)		–
	NAPATH-20B-15- □ (-T/O)		–
	NAPBTH-10A-15- □ (-T/O)		–
	NAPBTH-15A-15- □ (-T/O)		–
	NAPFTH-5A-15- □ (-T/O)		–
	NAPFTH-6A-15- □ (-T/O)		–
	NAPFTH-8A-15- □ (-T/O)		–
	NAPFTH-10A-15- □ (-T/O)		–
	NAPFTH-15A-15- □ (-T/O)		–
	NAPJTH-6-15- □ (-T/O)		–
	NAPJTH-8-15- □ (-T/O)		–
	NAPNTH-132-15- □ (-T/O)		–

※ The recommended torque is only for metal-to-metal tightening.
No recommended torque models shown as「–」.
※ (-T/O) indicates the connector. T：Barb, O：Push-in
※□ in the table indicates the cup material.

Fitting model	Applicable cup with fitting	Setting screw model	Tightening torque (N・m)
NAPFTH-20B-6-K(-T/O)	NAPBTH-30-6- □ (-T/O)	TN-PF-25-M6	–
	NAPBTH-40-6- □ (-T/O)		–
	NAPBTH-50-6- □ (-T/O)	TN-PF-50-M6	–
	NAPCTH-30-6- □ (-T/O)	TN-PC-30-M6	–
	NAPCTH-40-6- □ (-T/O)		–
	NAPCTH-60-6- □ (-T/O)		–
	NAPDTH-20-6-(T/O)	TN-PF-25-M6	2.6
	NAPDTH-30-6-(T/O)		2.6
	NAPDTH-40-6-(T/O)		2.6
	NAPDTH-50-6-(T/O)	TN-PF-50-M6	2.6
	NAPFTH-20B-6- □ (-T/O)	TN-PF-25-M6	–
	NAPFTH-25-6- □ (-T/O)		–
	NAPFTH-30-6- □ (-T/O)		–
	NAPFTH-35-6- □ (-T/O)		–
	NAPFTH-40-6- □ (-T/O)		–
	NAPFTH-50-6- □ (-T/O)	TN-PF-50-M6	–
	NAPFOTH-25-6- □ (-T/O)	TN-PF-25-M6	–
	NAPFOTH-30-6- □ (-T/O)		–
	NAPFOTH-35-6- □ (-T/O)		–
	NAPFOTH-40-6- □ (-T/O)		–
	NAPHTH-30-6- □ (-T/O)		–
	NAPHTH-45-6- □ (-T/O)		–
	NAPJTH-30-6- □ (-T/O)		–
	NAPJTH-35-6- □ (-T/O)		–
	NAPJTH-40-6- □ (-T/O)		–
	NAPJTH-50-6- □ (-T/O)	TN-PF-50-M6	–
	NAPNTH-101-6- □ (-T/O)	TN-PN-101-M6	2.6
	NAPNTH-102-6- □ (-T/O)	TN-PN-102-M6	2.6
	NAPNTH-103-6- □ (-T/O)	TN-PN-103-M6	2.6
	NAPNTH-104-6- □ (-T/O)	TN-PN-104-M6	2.6
	NAPNTH-106-6- □ (-T/O)		2.6
	NAPNTH-110-6- □ (-T/O)		2.6
	NAPNTH-111-6- □ (-T/O)		2.6
	NAPNTH-112-6- □ (-T/O)	TN-PN-112-M6	2.6
	NAPNTH-122-6- □ (-T/O)	TN-PN-122-M6	2.6
NAPFTH-20B-15-K(-T/O)	NAPBTH-30-15- □ (-T/O)	TN-PF-25-M6	–
	NAPBTH-40-15- □ (-T/O)		–
	NAPBTH-50-15- □ (-T/O)	TN-PF-50-M6	–
	NAPCTH-30-15- □ (-T/O)	TN-PC-30-M6	–
	NAPCTH-40-15- □ (-T/O)		–
	NAPCTH-60-15- □ (-T/O)		–
	NAPDTH-20-15-(T/O)	TN-PF-25-M6	2.6
	NAPDTH-30-15-(T/O)		2.6
	NAPDTH-40-15-(T/O)		2.6
	NAPDTH-50-15-(T/O)	TN-PF-50-M6	2.6
	NAPFTH-20B-15- □ (-T/O)	TN-PF-25-M6	–
	NAPFTH-25-15- □ (-T/O)		–
	NAPFTH-30-15- □ (-T/O)		–
	NAPFTH-35-15- □ (-T/O)		–
	NAPFTH-40-15- □ (-T/O)		–
	NAPFTH-50-15- □ (-T/O)	TN-PF-50-M6	–
	NAPFOTH-25-15- □ (-T/O)	TN-PF-25-M6	–
	NAPFOTH-30-15- □ (-T/O)		–
	NAPFOTH-35-15- □ (-T/O)		–
	NAPFOTH-40-15- □ (-T/O)		–
	NAPHTH-30-15- □ (-T/O)		–
	NAPHTH-45-15- □ (-T/O)		–
	NAPJTH-30-15- □ (-T/O)		–
	NAPJTH-35-15- □ (-T/O)		–
	NAPJTH-40-15- □ (-T/O)		–
	NAPJTH-50-15- □ (-T/O)	TN-PF-50-M6	–
	NAPNTH-101-15- □ (-T/O)	TN-PN-101-M6	2.6
	NAPNTH-102-15- □ (-T/O)	TN-PN-102-M6	2.6
	NAPNTH-103-15- □ (-T/O)	TN-PN-103-M6	2.6
	NAPNTH-104-15- □ (-T/O)	TN-PN-104-M6	2.6
	NAPNTH-106-15- □ (-T/O)		2.6
	NAPNTH-110-15- □ (-T/O)		2.6
	NAPNTH-111-15- □ (-T/O)		2.6
	NAPNTH-112-15- □ (-T/O)	TN-PN-112-M6	2.6
	NAPNTH-122-15- □ (-T/O)	TN-PN-122-M6	2.6

Fitting model	Applicable cup with fitting	Setting screw model	Tightening torque (N・m)
NAPFTH-20B-30-K(-T/O)	NAPBTH-30-30- □ (-T/O)	TN-PF-25-M6	–
	NAPBTH-40-30- □ (-T/O)		–
	NAPBTH-50-30- □ (-T/O)	TN-PF-50-M6	–
	NAPCTH-30-30- □ (-T/O)	TN-PC-30-M6	–
	NAPCTH-40-30- □ (-T/O)		–
	NAPCTH-60-30- □ (-T/O)		–
	NAPDTH-20-30(-T/O)	TN-PF-25-M6	2.6
	NAPDTH-30-30(-T/O)		2.6
	NAPDTH-40-30(-T/O)		2.6
	NAPDTH-50-30(-T/O)	TN-PF-50-M6	2.6
	NAPFTH-20B-30- □ (-T/O)	TN-PF-25-M6	–
	NAPFTH-25-30- □ (-T/O)		–
	NAPFTH-30-30- □ (-T/O)		–
	NAPFTH-35-30- □ (-T/O)		–
	NAPFTH-40-30- □ (-T/O)		–
	NAPFTH-50-30- □ (-T/O)	TN-PF-50-M6	–
	NAPFOTH-25-30- □ (-T/O)	TN-PF-25-M6	–
	NAPFOTH-30-30- □ (-T/O)		–
	NAPFOTH-35-30- □ (-T/O)		–
	NAPFOTH-40-30- □ (-T/O)		–
	NAPHTH-30-30- □ (-T/O)		–
	NAPHTH-45-30- □ (-T/O)		–
	NAPJTH-30-30- □ (-T/O)		–
	NAPJTH-35-30- □ (-T/O)		–
	NAPJTH-40-30- □ (-T/O)		–
	NAPJTH-50-30- □ (-T/O)	TN-PF-50-M6	–
	NAPNTH-101-30- □ (-T/O)	TN-PN-101-M6	2.6
	NAPNTH-102-30- □ (-T/O)	TN-PN-102-M6	2.6
	NAPNTH-103-30- □ (-T/O)	TN-PN-103-M6	2.6
	NAPNTH-104-30- □ (-T/O)	TN-PN-104-M6	2.6
	NAPNTH-106-30- □ (-T/O)		2.6
	NAPNTH-110-30- □ (-T/O)		2.6
	NAPNTH-111-30- □ (-T/O)		2.6
	NAPNTH-112-30- □ (-T/O)	TN-PN-112-M6	2.6
	NAPNTH-122-30- □ (-T/O)	TN-PN-122-M6	2.6
NAPQTH-6-3-K(-T/O)	NAPQTH-6-3- □ (-T/O)	Attach the cup directly to the fitting	–
	NAPQTH-8-3- □ (-T/O)		–
	NAPQTH-10-3- □ (-T/O)		–
NAPQTH-6-10-K(-T/O)	NAPQTH-6-10- □ (-T/O)	Attach the cup directly to the fitting	–
	NAPQTH-8-10- □ (-T/O)		–
	NAPQTH-10-10- □ (-T/O)		–
NAPQTH-6-15-K(-T/O)	NAPQTH-6-15- □ (-T/O)	Attach the cup directly to the fitting	–
	NAPQTH-8-15- □ (-T/O)		–
	NAPQTH-10-15- □ (-T/O)		–
NAPWTH-4X10-3-K(-T/O)	NAPWTH-4X10-3- □ (-T/O)	Attach the cup directly to the fitting	–
	NAPWTH-5X10-3- □ (-T/O)		–
	NAPWTH-6X10-3- □ (-T/O)		–
NAPWTH-4X10-10-K(-T/O)	NAPWTH-4X10-10- □ (-T/O)	Attach the cup directly to the fitting	–
	NAPWTH-5X10-10- □ (-T/O)		–
	NAPWTH-6X10-10- □ (-T/O)		–
NAPWTH-4X10-15-K(-T/O)	NAPWTH-4X10-15- □ (-T/O)	Attach the cup directly to the fitting	–
	NAPWTH-5X10-15- □ (-T/O)		–
	NAPWTH-6X10-15- □ (-T/O)		–
NAPWTH-4X20-3-K(-T/O)	NAPWTH-4X20-3- □ (-T/O)	Attach the cup directly to the fitting	–
	NAPWTH-5X20-3- □ (-T/O)		–
	NAPWTH-6X20-3- □ (-T/O)		–
	NAPWTH-8X20-3- □ (-T/O)		–
NAPWTH-4X20-10-K(-T/O)	NAPWTH-4X20-10- □ (-T/O)	Attach the cup directly to the fitting	–
	NAPWTH-5X20-10- □ (-T/O)		–
	NAPWTH-6X20-10- □ (-T/O)		–
	NAPWTH-8X20-10- □ (-T/O)		–
NAPWTH-4X20-15-K(-T/O)	NAPWTH-4X20-15- □ (-T/O)	Attach the cup directly to the fitting	–
	NAPWTH-5X20-15- □ (-T/O)		–
	NAPWTH-6X20-15- □ (-T/O)		–
	NAPWTH-8X20-15- □ (-T/O)		–
NAPWTH-4X30-3-K(-T/O)	NAPWTH-4X30-3- □ (-T/O)	Attach the cup directly to the fitting	–
	NAPWTH-5X30-3- □ (-T/O)		–
	NAPWTH-6X30-3- □ (-T/O)		–
	NAPWTH-8X30-3- □ (-T/O)		–
NAPWTH-4X30-10-K(-T/O)	NAPWTH-4X30-10- □ (-T/O)	Attach the cup directly to the fitting	–
	NAPWTH-5X30-10- □ (-T/O)		–
	NAPWTH-6X30-10- □ (-T/O)		–
	NAPWTH-8X30-10- □ (-T/O)		–
NAPWTH-4X30-15-K(-T/O)	NAPWTH-4X30-15- □ (-T/O)	Attach the cup directly to the fitting	–
	NAPWTH-5X30-15- □ (-T/O)		–
	NAPWTH-6X30-15- □ (-T/O)		–
	NAPWTH-8X30-15- □ (-T/O)		–

※ The recommended torque is only for metal-to-metal tightening.
No recommended torque models shown as「–」.
※ (-T/O) indicates the connector. T：Barb, O：Push-in
※□ in the table indicates the cup material.
※ NAPDTH needs holder for assembly. Refer to P.275 for detailed specifications.

Fitting • Setting Screw • Cup with Fitting Application List

Non-rotation Spring Type • Side Port

Fitting model	Applicable cup with fitting	Setting screw model	Tightening torque (N・m)
NAPAYH-25-6-K(-T/O)	NAPAYH-25-6- □ (-T/O)	Screw the fitting directly into the male screw in the cup	2.6
	NAPAYH-30-6- □ (-T/O)		2.6
	NAPAYH-30B-6- □ (-T/O)	TN-PA-30-M6	2.6
	NAPAYH-40-6- □ (-T/O)	Screw the fitting directly into the male screw in the cup	2.6
	NAPAYH-50-6- □ (-T/O)		2.6
NAPAYH-25-15-K(-T/O)	NAPAYH-25-15- □ (-T/O)	Screw the fitting directly into the male screw in the cup	2.6
	NAPAYH-30-15- □ (-T/O)		2.6
	NAPAYH-30B-15- □ (-T/O)	TN-PA-30-M6	2.6
	NAPAYH-40-15- □ (-T/O)	Screw the fitting directly into the male screw in the cup	2.6
	NAPAYH-50-15- □ (-T/O)		2.6
NAPAYH-25-30-K(-T/O)	NAPAYH-25-30- □ (-T/O)	Screw the fitting directly into the male screw in the cup	2.6
	NAPAYH-30-30- □ (-T/O)		2.6
	NAPAYH-30B-30- □ (-T/O)	TN-PA-30-M6	2.6
	NAPAYH-40-30- □ (-T/O)	Screw the fitting directly into the male screw in the cup	2.6
	NAPAYH-50-30- □ (-T/O)		2.6
NAPBYH-20-6-K(-T/O)	NAPBYH-20-6- □ (-T/O)	TN-PF-20-M5	–
	NAPFOYH-20-6- □ (-T/O)		–
	NAPJYH-20-6- □ (-T/O)		–
	NAPJYH-25-6- □ (-T/O)		–
	NAPNYH-121-6- □ (-T/O)		–
	NAPRYH-9.5X25-6- □ (-T/O)	TN-PR-15-M5	1.5
	NAPRYH-12.5X23-6- □ (-T/O)	TN-PF-15-M5	–
	NAPRYH-15X30-6- □ (-T/O)	TN-PR-15-M5	1.5
	NAPRYH-32X32-6- □ (-T/O)	TN-PF-20-M5	–
NAPBYH-20-15-K(-T/O)	NAPBYH-20-15- □ (-T/O)	TN-PF-20-M5	–
	NAPFOYH-20-15- □ (-T/O)		–
	NAPJYH-20-15- □ (-T/O)		–
	NAPJYH-25-15- □ (-T/O)		–
	NAPNYH-121-15- □ (-T/O)		–
	NAPRYH-9.5X25-15- □ (-T/O)	TN-PR-15-M5	1.5
	NAPRYH-12.5X23-15- □ (-T/O)	TN-PF-15-M5	–
	NAPRYH-15X30-15- □ (-T/O)	TN-PR-15-M5	1.5
	NAPRYH-32X32-15- □ (-T/O)	TN-PF-20-M5	–
NAPBYH-20-30-K(-T/O)	NAPBYH-20-30- □ (-T/O)	TN-PF-20-M5	–
	NAPFOYH-20-30- □ (-T/O)		–
	NAPJYH-20-30- □ (-T/O)		–
	NAPJYH-25-30- □ (-T/O)		–
	NAPNYH-121-30- □ (-T/O)		–
	NAPRYH-9.5X25-30- □ (-T/O)	TN-PR-15-M5	1.5
	NAPRYH-12.5X23-30- □ (-T/O)	TN-PF-15-M5	–
	NAPRYH-15X30-30- □ (-T/O)	TN-PR-15-M5	1.5
	NAPRYH-32X32-30- □ (-T/O)	TN-PF-20-M5	–
NAPCYH-5-3-K(-T/O)	NAPCYH-5-3- □ (-T/O)	Attach the cup directly to the fitting	–
	NAPCYH-7-3- □ (-T/O)		–
NAPCYH-5-10-K(-T/O)	NAPCYH-5-10- □ (-T/O)		–
	NAPCYH-7-10- □ (-T/O)		–
NAPCYH-5-15-K(-T/O)	NAPCYH-5-15- □ (-T/O)		–
	NAPCYH-7-15- □ (-T/O)		–
NAPCYH-10-3-K(-T/O)	NAPCYH-10-3- □ (-T/O)	TN-PC-10-M5	1.5
	NAPCYH-15-3- □ (-T/O)		1.5
	NAPCYH-18-3- □ (-T/O)		1.5
	NAPCYH-20-3- □ (-T/O)		1.5
	NAPJYH-10-3- □ (-T/O)	TN-PF-15-M5	–
	NAPJYH-15-3- □ (-T/O)		–
	NAPNYH-109-3- □ (-T/O)	TN-PN-109-M5	1.5
	NAPNYH-114-3- □ (-T/O)	TN-PN-114-M5	1.5
	NAPNYH-116-3- □ (-T/O)	TN-PN-116-M5	1.5
	NAPNYH-117-3- □ (-T/O)		1.5
	NAPNYH-123-3- □ (-T/O)	TN-PN-123-M5	–
	NAPNYH-125-3- □ (-T/O)	TN-PN-116-M5	1.5
	NAPNYH-130A-3- □ (-T/O)	TN-PN-130-M5	1.5
	NAPNYH-130B-3- □ (-T/O)		1.5
	NAPNYH-131-3- □ (-T/O)		1.5
	NAPNYH-133-3- □ (-T/O)		1.5
	NAPNYH-134-3- □ (-T/O)		1.5
NAPCYH-10-10-K(-T/O)	NAPCYH-10-10- □ (-T/O)	TN-PC-10-M5	1.5
	NAPCYH-15-10- □ (-T/O)		1.5
	NAPCYH-18-10- □ (-T/O)		1.5
	NAPCYH-20-10- □ (-T/O)		1.5
	NAPJYH-10-10- □ (-T/O)	TN-PF-15-M5	–
	NAPJYH-15-10- □ (-T/O)		–
	NAPNYH-109-10- □ (-T/O)	TN-PN-109-M5	1.5
	NAPNYH-114-10- □ (-T/O)	TN-PN-114-M5	1.5
	NAPNYH-116-10- □ (-T/O)	TN-PN-116-M5	1.5
	NAPNYH-117-10- □ (-T/O)		1.5
	NAPNYH-123-10- □ (-T/O)	TN-PN-123-M5	–
	NAPNYH-125-10- □ (-T/O)	TN-PN-116-M5	1.5
	NAPNYH-130A-10- □ (-T/O)	TN-PN-130-M5	1.5
	NAPNYH-130B-10- □ (-T/O)		1.5
	NAPNYH-131-10- □ (-T/O)		1.5
	NAPNYH-133-10- □ (-T/O)		1.5
	NAPNYH-134-10- □ (-T/O)		1.5

Fitting model	Applicable cup with fitting	Setting screw model	Tightening torque (N・m)
NAPCYH-10-15-K(-T/O)	NAPCYH-10-15- □ (-T/O)	TN-PC-10-M5	1.5
	NAPCYH-15-15- □ (-T/O)		1.5
	NAPCYH-18-15- □ (-T/O)		1.5
	NAPCYH-20-15- □ (-T/O)		1.5
	NAPJYH-10-15- □ (-T/O)	TN-PF-15-M5	–
	NAPJYH-15-15- □ (-T/O)		–
	NAPNYH-109-15- □ (-T/O)	TN-PN-109-M5	1.5
	NAPNYH-114-15- □ (-T/O)	TN-PN-114-M5	1.5
	NAPNYH-116-15- □ (-T/O)	TN-PN-116-M5	1.5
	NAPNYH-117-15- □ (-T/O)		1.5
	NAPNYH-123-15- □ (-T/O)	TN-PN-123-M5	–
	NAPNYH-125-15- □ (-T/O)	TN-PN-116-M5	1.5
	NAPNYH-130A-15- □ (-T/O)	TN-PN-130-M5	1.5
	NAPNYH-130B-15- □ (-T/O)		1.5
	NAPNYH-131-15- □ (-T/O)		1.5
	NAPNYH-133-15- □ (-T/O)		1.5
	NAPNYH-134-15- □ (-T/O)		1.5
NAPFYH-1.5A-3-K(-T/O)	NAPFYH-1.5A-3- □ (-T/O)	Attach the cup directly to the fitting	–
	NAPFYH-2A-3- □ (-T/O)		–
	NAPFYH-3.5A-3- □ (-T/O)		–
	NAPJYH-2-3- □ (-T/O)		–
	NAPJYH-4-3- □ (-T/O)		–
NAPFYH-1.5A-10-K(-T/O)	NAPFYH-1.5A-10- □ (-T/O)	Attach the cup directly to the fitting	–
	NAPFYH-2A-10- □ (-T/O)		–
	NAPFYH-3.5A-10- □ (-T/O)		–
	NAPJYH-2-10- □ (-T/O)		–
	NAPJYH-4-10- □ (-T/O)		–
NAPFYH-1.5A-15-K(-T/O)	NAPFYH-1.5A-15- □ (-T/O)	Attach the cup directly to the fitting	–
	NAPFYH-2A-15- □ (-T/O)		–
	NAPFYH-3.5A-15- □ (-T/O)		–
	NAPJYH-2-15- □ (-T/O)		–
	NAPJYH-4-15- □ (-T/O)		–
NAPFYH-2X4A-3-K(-T/O)	NAPFYH-2X4A-3- □ (-T/O)	Attach the cup directly to the fitting	–
	NAPFYH-3.5X7A-3- □ (-T/O)		–
NAPFYH-2X4A-10-K(-T/O)	NAPFYH-2X4A-10- □ (-T/O)	Attach the cup directly to the fitting	–
	NAPFYH-3.5X7A-10- □ (-T/O)		–
NAPFYH-2X4A-15-K(-T/O)	NAPFYH-2X4A-15- □ (-T/O)	Attach the cup directly to the fitting	–
	NAPFYH-3.5X7A-15- □ (-T/O)		–
NAPFYH-5A-3-K(-T/O)	NAPAYH-10A-3- □ (-T/O)	Attach the cup directly to the fitting	–
	NAPAYH-10B-3- □ (-T/O)		–
	NAPAYH-15A-3- □ (-T/O)		–
	NAPAYH-15B-3- □ (-T/O)		–
	NAPAYH-20A-3- □ (-T/O)		–
	NAPAYH-20B-3- □ (-T/O)		–
	NAPBYH-10A-3- □ (-T/O)		–
	NAPBYH-15A-3- □ (-T/O)		–
	NAPFYH-5A-3- □ (-T/O)		–
	NAPFYH-6A-3- □ (-T/O)		–
	NAPFYH-8A-3- □ (-T/O)		–
	NAPFYH-10A-3- □ (-T/O)		–
	NAPFYH-15A-3- □ (-T/O)		–
	NAPJYH-6-3- □ (-T/O)		–
	NAPJYH-8-3- □ (-T/O)		–
	NAPNYH-132-3- □ (-T/O)		–
NAPFYH-5A-10-K(-T/O)	NAPAYH-10A-10- □ (-T/O)	Attach the cup directly to the fitting	–
	NAPAYH-10B-10- □ (-T/O)		–
	NAPAYH-15A-10- □ (-T/O)		–
	NAPAYH-15B-10- □ (-T/O)		–
	NAPAYH-20A-10- □ (-T/O)		–
	NAPAYH-20B-10- □ (-T/O)		–
	NAPBYH-10A-10- □ (-T/O)		–
	NAPBYH-15A-10- □ (-T/O)		–
	NAPFYH-5A-10- □ (-T/O)		–
	NAPFYH-6A-10- □ (-T/O)		–
	NAPFYH-8A-10- □ (-T/O)		–
	NAPFYH-10A-10- □ (-T/O)		–
	NAPFYH-15A-10- □ (-T/O)		–
	NAPJYH-6-10- □ (-T/O)		–
	NAPJYH-8-10- □ (-T/O)		–
	NAPNYH-132-10- □ (-T/O)		–
NAPFYH-5A-15-K(-T/O)	NAPAYH-10A-15- □ (-T/O)	Attach the cup directly to the fitting	–
	NAPAYH-10B-15- □ (-T/O)		–
	NAPAYH-15A-15- □ (-T/O)		–
	NAPAYH-15B-15- □ (-T/O)		–
	NAPAYH-20A-15- □ (-T/O)		–
	NAPAYH-20B-15- □ (-T/O)		–
	NAPBYH-10A-15- □ (-T/O)		–
	NAPBYH-15A-15- □ (-T/O)		–
	NAPFYH-5A-15- □ (-T/O)		–
	NAPFYH-6A-15- □ (-T/O)		–
	NAPFYH-8A-15- □ (-T/O)		–
	NAPFYH-10A-15- □ (-T/O)		–
	NAPFYH-15A-15- □ (-T/O)		–
	NAPJYH-6-15- □ (-T/O)		–
	NAPJYH-8-15- □ (-T/O)		–
	NAPNYH-132-15- □ (-T/O)		–

※ The recommended torque is only for metal-to-metal tightening.
No recommended torque models shown as「–」.
※ (-T/O) indicates the connector. T：Barb, O：Push-in
※□ in the table indicates the cup material.

Fitting model	Applicable cup with fitting	Setting screw model	Tightening torque (N・m)
NAPFYH-20B-6-K(-T/O)	NAPBYH-30-6- □ (-T/O)	TN-PF-25-M6	–
	NAPBYH-40-6- □ (-T/O)		–
	NAPBYH-50-6- □ (-T/O)	TN-PF-50-M6	–
	NAPCYH-30-6- □ (-T/O)	TN-PC-30-M6	–
	NAPCYH-40-6- □ (-T/O)		–
	NAPCYH-60-6- □ (-T/O)		–
	NAPDYH-20-6-(T/O)	TN-PF-25-M6	2.6
	NAPDYH-30-6-(T/O)		2.6
	NAPDYH-40-6-(T/O)		2.6
	NAPDYH-50-6-(T/O)	TN-PF-50-M6	2.6
	NAPFYH-20B-6- □ (-T/O)	TN-PF-25-M6	–
	NAPFYH-25-6- □ (-T/O)		–
	NAPFYH-30-6- □ (-T/O)		–
	NAPFYH-35-6- □ (-T/O)		–
	NAPFYH-40-6- □ (-T/O)		–
	NAPFYH-50-6- □ (-T/O)	TN-PF-50-M6	–
	NAPFOYH-25-6- □ (-T/O)	TN-PF-25-M6	–
	NAPFOYH-30-6- □ (-T/O)		–
	NAPFOYH-35-6- □ (-T/O)		–
	NAPFOYH-40-6- □ (-T/O)		–
	NAPHYH-30-6- □ (-T/O)		–
	NAPHYH-45-6- □ (-T/O)		–
	NAPJYH-30-6- □ (-T/O)		–
	NAPJYH-35-6- □ (-T/O)		–
	NAPJYH-40-6- □ (-T/O)		–
	NAPJYH-50-6- □ (-T/O)	TN-PF-50-M6	–
	NAPNYH-101-6- □ (-T/O)	TN-PN-101-M6	2.6
	NAPNYH-102-6- □ (-T/O)	TN-PN-102-M6	2.6
	NAPNYH-103-6- □ (-T/O)	TN-PN-103-M6	2.6
	NAPNYH-104-6- □ (-T/O)	TN-PN-104-M6	2.6
	NAPNYH-106-6- □ (-T/O)		2.6
	NAPNYH-110-6- □ (-T/O)		2.6
	NAPNYH-111-6- □ (-T/O)		2.6
	NAPNYH-112-6- □ (-T/O)	TN-PN-112-M6	2.6
	NAPNYH-122-6- □ (-T/O)	TN-PN-122-M6	2.6
NAPFYH-20B-15-K(-T/O)	NAPBYH-30-15- □ (-T/O)	TN-PF-25-M6	–
	NAPBYH-40-15- □ (-T/O)		–
	NAPBYH-50-15- □ (-T/O)	TN-PF-50-M6	–
	NAPCYH-30-15- □ (-T/O)	TN-PC-30-M6	–
	NAPCYH-40-15- □ (-T/O)		–
	NAPCYH-60-15- □ (-T/O)		–
	NAPDYH-20-15-(T/O)	TN-PF-25-M6	2.6
	NAPDYH-30-15-(T/O)		2.6
	NAPDYH-40-15-(T/O)		2.6
	NAPDYH-50-15-(T/O)	TN-PF-50-M6	2.6
	NAPFYH-20B-15- □ (-T/O)	TN-PF-25-M6	–
	NAPFYH-25-15- □ (-T/O)		–
	NAPFYH-30-15- □ (-T/O)		–
	NAPFYH-35-15- □ (-T/O)		–
	NAPFYH-40-15- □ (-T/O)		–
	NAPFYH-50-15- □ (-T/O)	TN-PF-50-M6	–
	NAPFOYH-25-15- □ (-T/O)	TN-PF-25-M6	–
	NAPFOYH-30-15- □ (-T/O)		–
	NAPFOYH-35-15- □ (-T/O)		–
	NAPFOYH-40-15- □ (-T/O)		–
	NAPHYH-30-15- □ (-T/O)		–
	NAPHYH-45-15- □ (-T/O)		–
	NAPJYH-30-15- □ (-T/O)		–
	NAPJYH-35-15- □ (-T/O)		–
	NAPJYH-40-15- □ (-T/O)		–
	NAPJYH-50-15- □ (-T/O)	TN-PF-50-M6	–
	NAPNYH-101-15- □ (-T/O)	TN-PN-101-M6	2.6
	NAPNYH-102-15- □ (-T/O)	TN-PN-102-M6	2.6
	NAPNYH-103-15- □ (-T/O)	TN-PN-103-M6	2.6
	NAPNYH-104-15- □ (-T/O)	TN-PN-104-M6	2.6
	NAPNYH-106-15- □ (-T/O)		2.6
	NAPNYH-110-15- □ (-T/O)		2.6
	NAPNYH-111-15- □ (-T/O)		2.6
	NAPNYH-112-15- □ (-T/O)	TN-PN-112-M6	2.6
	NAPNYH-122-15- □ (-T/O)	TN-PN-122-M6	2.6

Fitting model	Applicable cup with fitting	Setting screw model	Tightening torque (N・m)
NAPFYH-20B-30-K(-T/O)	NAPBYH-30-30- □ (-T/O)	TN-PF-25-M6	–
	NAPBYH-40-30- □ (-T/O)		–
	NAPBYH-50-30- □ (-T/O)	TN-PF-50-M6	–
	NAPCYH-30-30- □ (-T/O)	TN-PC-30-M6	–
	NAPCYH-40-30- □ (-T/O)		–
	NAPCYH-60-30- □ (-T/O)		–
	NAPDYH-20-30(-T/O)	TN-PF-25-M6	2.6
	NAPDYH-30-30(-T/O)		2.6
	NAPDYH-40-30(-T/O)		2.6
	NAPDYH-50-30(-T/O)	TN-PF-50-M6	2.6
	NAPFYH-20B-30- □ (-T/O)	TN-PF-25-M6	–
	NAPFYH-25-30- □ (-T/O)		–
	NAPFYH-30-30- □ (-T/O)		–
	NAPFYH-35-30- □ (-T/O)		–
	NAPFYH-40-30- □ (-T/O)		–
	NAPFYH-50-30- □ (-T/O)	TN-PF-50-M6	–
	NAPFOYH-25-30- □ (-T/O)	TN-PF-25-M6	–
	NAPFOYH-30-30- □ (-T/O)		–
	NAPFOYH-35-30- □ (-T/O)		–
	NAPFOYH-40-30- □ (-T/O)		–
	NAPHYH-30-30- □ (-T/O)		–
	NAPHYH-45-30 □ (-T/O)		–
	NAPJYH-30-30- □ (-T/O)		–
	NAPJYH-35-30- □ (-T/O)		–
	NAPJYH-40-30- □ (-T/O)		–
	NAPJYH-50-30- □ (-T/O)	TN-PF-50-M6	–
	NAPNYH-101-30- □ (-T/O)	TN-PN-101-M6	2.6
	NAPNYH-102-30- □ (-T/O)	TN-PN-102-M6	2.6
	NAPNYH-103-30- □ (-T/O)	TN-PN-103-M6	2.6
	NAPNYH-104-30- □ (-T/O)	TN-PN-104-M6	2.6
	NAPNYH-106-30- □ (-T/O)		2.6
	NAPNYH-110-30- □ (-T/O)		2.6
	NAPNYH-111-30- □ (-T/O)		2.6
	NAPNYH-112-30- □ (-T/O)	TN-PN-112-M6	2.6
	NAPNYH-122-30- □ (-T/O)	TN-PN-122-M6	2.6
NAPQYH-6-3-K(-T/O)	NAPQYH-6-3- □ (-T/O)	Attach the cup directly to the fitting	–
	NAPQYH-8-3- □ (-T/O)		–
	NAPQYH-10-3- □ (-T/O)		–
NAPQYH-6-10-K(-T/O)	NAPQYH-6-10- □ (-T/O)		–
	NAPQYH-8-10- □ (-T/O)		–
	NAPQYH-10-10- □ (-T/O)		–
NAPQYH-6-15-K(-T/O)	NAPQYH-6-15- □ (-T/O)		–
	NAPQYH-8-15- □ (-T/O)		–
	NAPQYH-10-15- □ (-T/O)		–
NAPWYH-4X10-3-K(-T/O)	NAPWYH-4X10-3- □ (-T/O)	Attach the cup directly to the fitting	–
	NAPWYH-5X10-3- □ (-T/O)		–
	NAPWYH-6X10-3- □ (-T/O)		–
NAPWYH-4X10-10-K(-T/O)	NAPWYH-4X10-10- □ (-T/O)	Attach the cup directly to the fitting	–
	NAPWYH-5X10-10- □ (-T/O)		–
	NAPWYH-6X10-10- □ (-T/O)		–
NAPWYH-4X10-15-K(-T/O)	NAPWYH-4X10-15- □ (-T/O)	Attach the cup directly to the fitting	–
	NAPWYH-5X10-15- □ (-T/O)		–
	NAPWYH-6X10-15- □ (-T/O)		–
NAPWYH-4X20-3-K(-T/O)	NAPWYH-4X20-3- □ (-T/O)	Attach the cup directly to the fitting	–
	NAPWYH-5X20-3- □ (-T/O)		–
	NAPWYH-6X20-3- □ (-T/O)		–
	NAPWYH-8X20-3- □ (-T/O)		–
NAPWYH-4X20-10-K(-T/O)	NAPWYH-4X20-10- □ (-T/O)	Attach the cup directly to the fitting	–
	NAPWYH-5X20-10- □ (-T/O)		–
	NAPWYH-6X20-10- □ (-T/O)		–
	NAPWYH-8X20-10- □ (-T/O)		–
NAPWYH-4X20-15-K(-T/O)	NAPWYH-4X20-15- □ (-T/O)	Attach the cup directly to the fitting	–
	NAPWYH-5X20-15- □ (-T/O)		–
	NAPWYH-6X20-15- □ (-T/O)		–
	NAPWYH-8X20-15- □ (-T/O)		–
NAPWYH-4X30-3-K(-T/O)	NAPWYH-4X30-3- □ (-T/O)	Attach the cup directly to the fitting	–
	NAPWYH-5X30-3- □ (-T/O)		–
	NAPWYH-6X30-3- □ (-T/O)		–
	NAPWYH-8X30-3- □ (-T/O)		–
NAPWYH-4X30-10-K(-T/O)	NAPWYH-4X30-10- □ (-T/O)	Attach the cup directly to the fitting	–
	NAPWYH-5X30-10- □ (-T/O)		–
	NAPWYH-6X30-10- □ (-T/O)		–
	NAPWYH-8X30-10- □ (-T/O)		–
NAPWYH-4X30-15-K(-T/O)	NAPWYH-4X30-15- □ (-T/O)	Attach the cup directly to the fitting	–
	NAPWYH-5X30-15- □ (-T/O)		–
	NAPWYH-6X30-15- □ (-T/O)		–
	NAPWYH-8X30-15- □ (-T/O)		–

※ The recommended torque is only for metal-to-metal tightening.
No recommended torque models shown as「–」.
※ (-T/O) indicates the connector. T：Barb, O：Push-in
※ □ in the table indicates the cup material.
※ NAPDYH needs holder for assembly. Refer to P.275 for detailed specifications.

Fitting • Setting Screw • Cup with Fitting Application List

Compact Spring Type

Fitting model	Applicable cup with fitting	Setting screw model	Tightening torque (N・m)
PSS-L3	PSS-L3-PAG-10A- □	Attach the cup directly to the fitting	0.58 ~ 0.68
	PSS-L3-PAG-15A- □		
	PSS-L3-PAG-20A- □		
	PSS-L3-PBG-10A- □		
	PSS-L3-PBG-15A- □		
	PSS-L3-PFG-5A- □		
	PSS-L3-PFG-6A- □		
	PSS-L3-PFG-8A- □		
	PSS-L3-PFG-10A- □		
	PSS-L3-PFG-15A- □		
	PSS-L3-PJG-6- □		
	PSS-L3-PJG-8- □		
PSS-L5	PSS-L5-PAG-10A- □	Attach the cup directly to the fitting	0.58 ~ 0.68
	PSS-L5-PAG-15A- □		
	PSS-L5-PAG-20A- □		
	PSS-L5-PBG-10A- □		
	PSS-L5-PBG-15A- □		
	PSS-L5-PFG-5A- □		
	PSS-L5-PFG-6A- □		
	PSS-L5-PFG-8A- □		
	PSS-L5-PFG-10A- □		
	PSS-L5-PFG-15A- □		
	PSS-L5-PJG-6- □		
	PSS-L5-PJG-8- □		
PSS-S3	PSS-S3-PFG-1.5A- □	Attach the cup directly to the fitting	0.58 ~ 0.68
	PSS-S3-PFG-2A- □		
	PSS-S3-PFG-3.5A- □		
	PSS-S3-PJG-2- □		
	PSS-S3-PJG-4- □		
PSS-S5	PSS-S5-PFG-1.5A- □	Attach the cup directly to the fitting	0.58 ~ 0.68
	PSS-S5-PFG-2A- □		
	PSS-S5-PFG-3.5A- □		
	PSS-S5-PJG-2- □		
	PSS-S5-PJG-4- □		

OTHER EQUIPMENTS FOR VACUUM

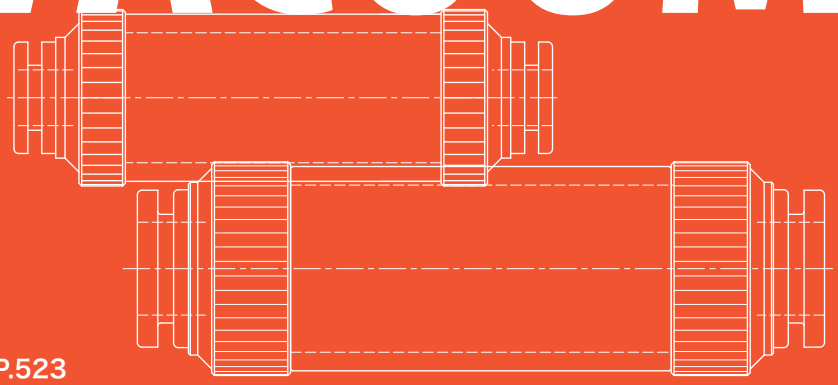

Vacuum Filter VF series P.523

Vacuum In-line Filter VFL series P.527

Miniature Vacuum In-line Filter VFL-M5 series P.531

Workpiece Drop Prevention Check Valve FPV series P.533

Silencer for CONVUM MS series P.539

Vacuum Check Valve CH-01 P.541

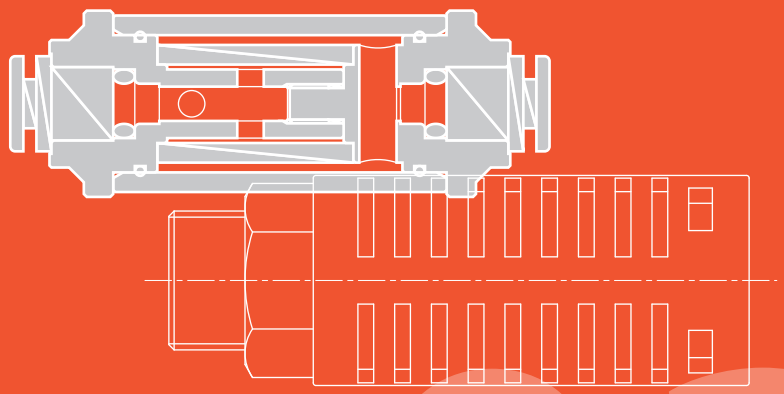

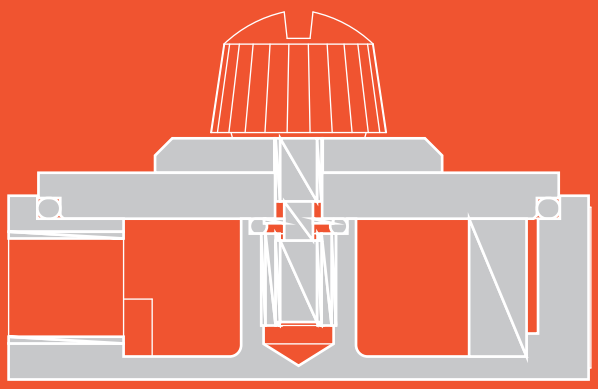

03

VF Series

Vacuum Filter

RoHS

Flat type design, high vacuum (air) flow, easy maintenance!

- Can connect to vacuum port that has high flow.
- Easily exchange the elements without tools while piping.

Several port size available.

Rp1/8 | Rp1/4 | Rc3/8

VF series is for vacuum line only.

※Please use only for the vacuum line.

※To protect the vacuum equipment under the dust environment, please use on the line.

How to Order

VF — 3

Port Size

Symbol	Size
3	Rp1/8
5	Rp1/4
6	Rc3/8

Symbol

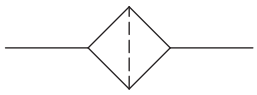

Maintenance Parts

• **Element**

VF — 3 E

Applicable model

3	VF-3
5	VF-5
6	VF-6

• **Filter kit (cover, O ring)**

Model number	Applicable model
VF-3K	VF-3
	VF-5
	VF-6

Specifications

Description \ Model number	Unit	VF-3	VF-5	VF-6
Fluid		Air (vacuum), non-corrosive gas, non-flammable gas		
Ambient temperature range	℃	0～60(No freezing)		
Operating pressure range	kPa	-95.9～0		
Withstand pressure	MPa	0.5		
Port size		Rp1/8	Rp1/4	Rc3/8
Filtration	μm	15		
Filtration area	mm^2	1100	2095	2646
Suitable CONVUM nozzle size	mm	1.0 or less	1.5 or less	2.0 or less
Weight	g	90	150	235

Construction

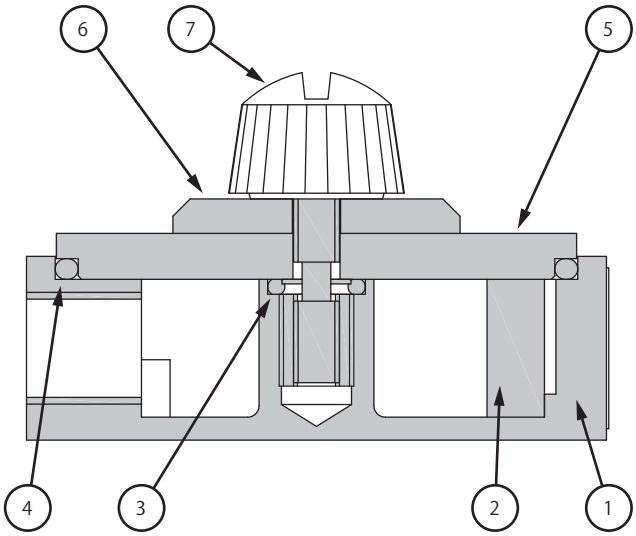

Component Parts

No.	Parts name	Material
1	Body	Aluminium
2	Element	PVF
3	O ring	NBR
4	O ring	NBR
5	Cover	PC
6	Cover ring	Iron
7	Screw	-

Dimensions

(mm)

VF-3

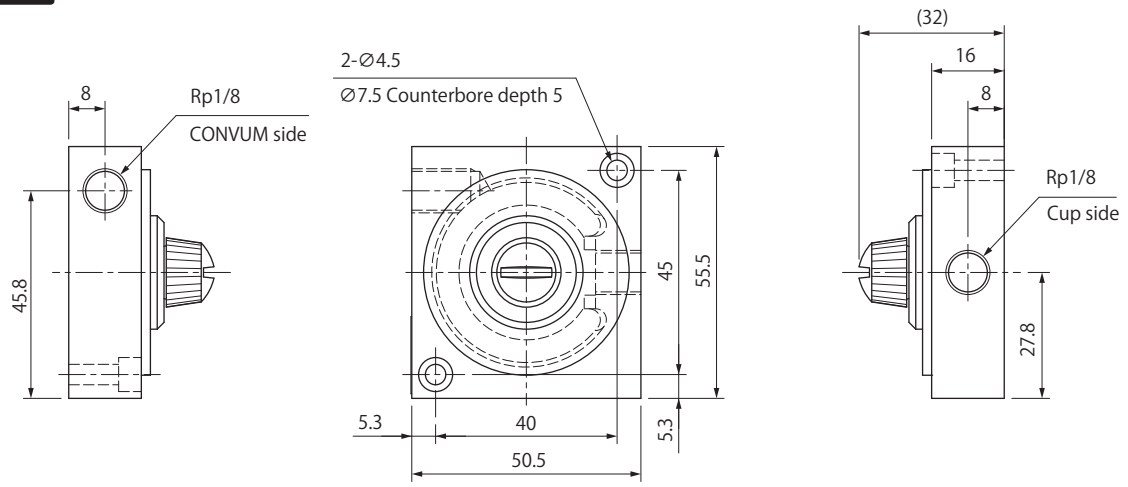

VF-5

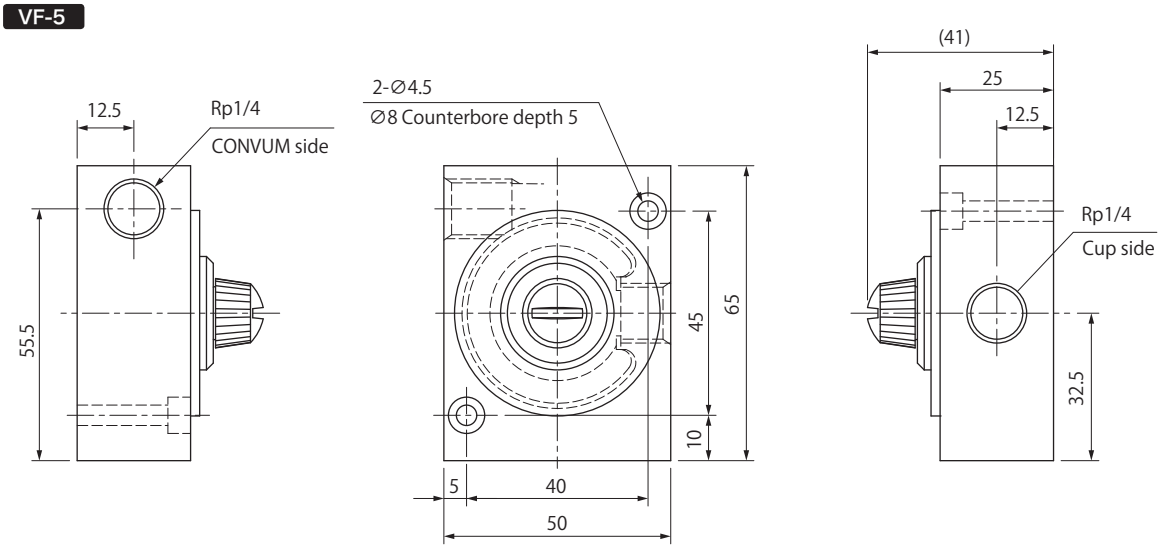

VF-6

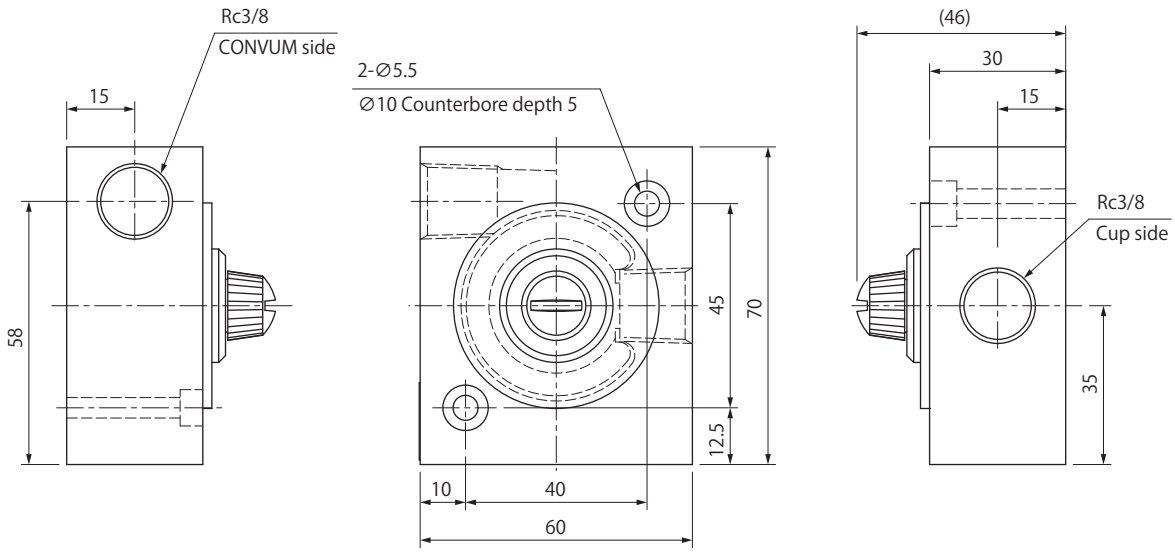

03
Other Equipments for Vacuum
VF
VFL
VFL-M5
FPV
MS
CH-01

VFL Series

Vacuum In-line Filter

RoHS

With push-in connector, easily removed. Check the dirt with transparent body!

- ϕ4,ϕ6 push-in connector built-in. Easily mount and remove the tube.
- Dirty condition of the element can be checked from the outside.

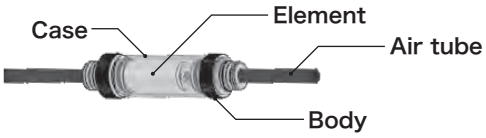

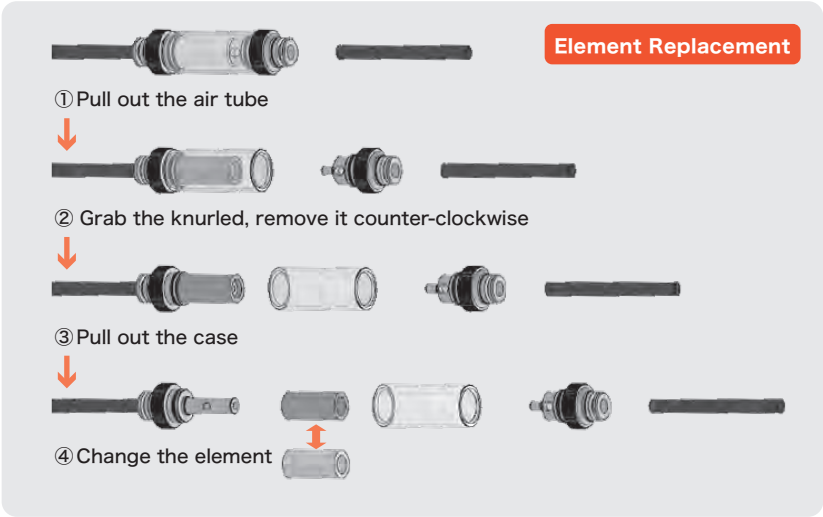

VFL series is for vacuum line only

※Please use only for the vacuum line.

※To protect the vacuum equipment under the dust environment, please use on the line.

How to Order

VFL — 44

Applicable Tube O.D. (mm)

Symbol	Tube O.D
44	4
66	6
88	8
1010	10

Symbol

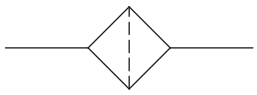

Maintenance Parts

- **Element**

VFL — 44 E

Applicable model

44	VFL-44/66
88	VFL-88/1010

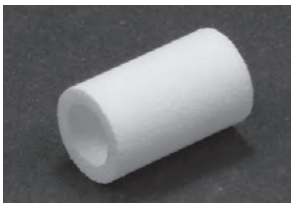

- **Filter kit (case, O ring)**

VFL — 44 K

Applicable model

44	VFL-44
66	VFL-66
88	VFL-88
1010	VFL-1010

- **Holder**

VFL — 46 H

Applicable model

46	VFL-44/66
81	VFL-88/1010

Specifications

Description ＼ Model number	Unit	VFL-44	VFL-66	VFL-88	VFL-1010
Fluid		Air (vacuum), non-corrosive gas, non-flammable gas			
Ambient temperature range	℃	0～60(No freezing)			
Operating pressure range	kPa	-95.9～0			
Withstand pressure	MPa	0.5			
Applicable tube O.D.	mm	4	6	8	10
Filtration	μm	15			
Filtration area	mm^2	750		1256	
Suitable CONVUM nozzle size	mm	1.0 or less	1.5 or less	2.0 or less	
Weight	g	19	20	37	41

Construction

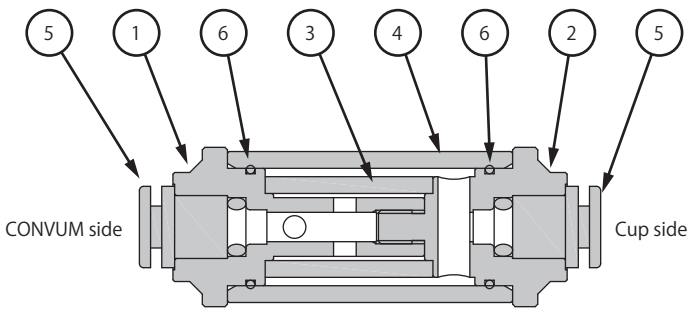

Component Parts

No.	Parts name	Material
1	Body A	Aluminium
2	Body B	Aluminium
3	Element	PVF
4	Case	PA
5	Connector	-
6	O ring	NBR

Dimensions

(mm)

VFL-44

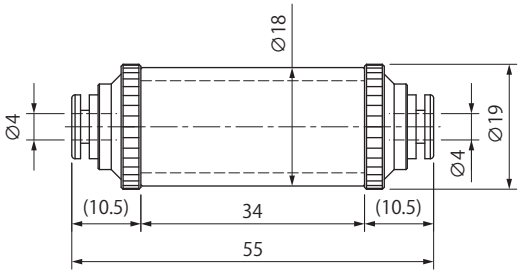

VFL-66

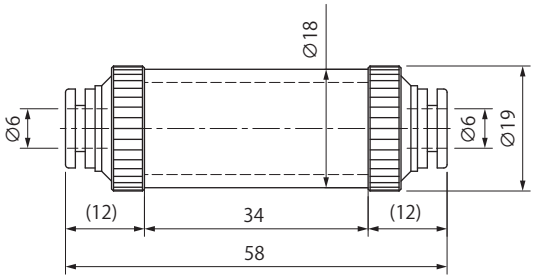

VFL-88

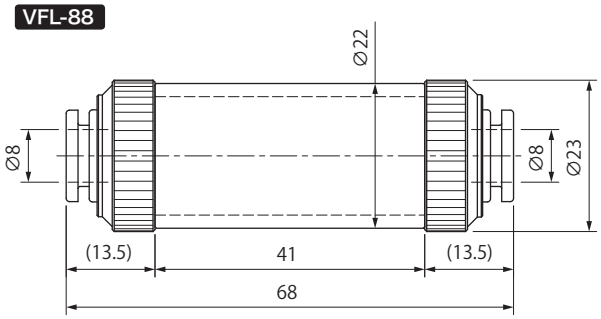

VFL-1010

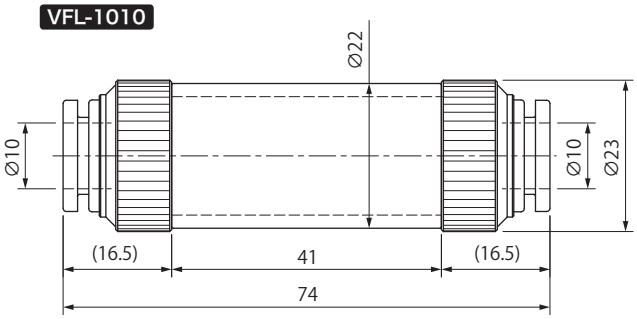

Holder

VFL-46H

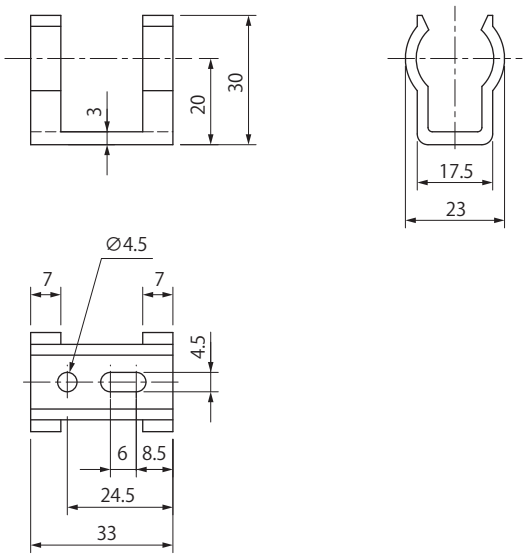

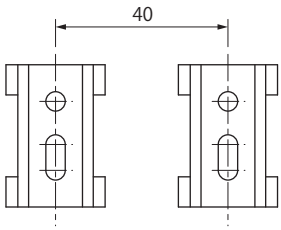

Recommended mounting dimensions

VFL-81H

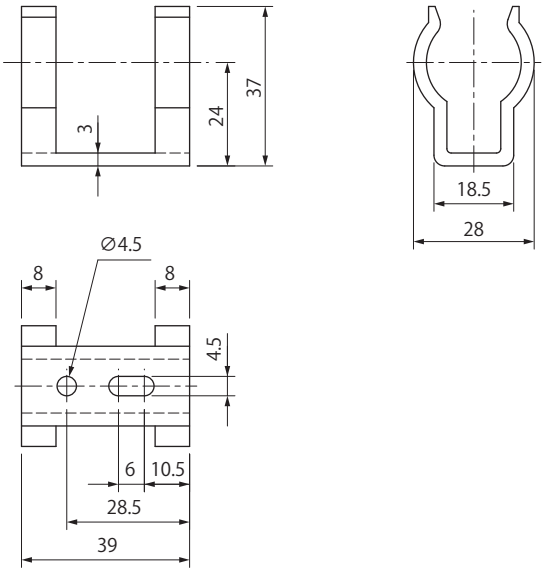

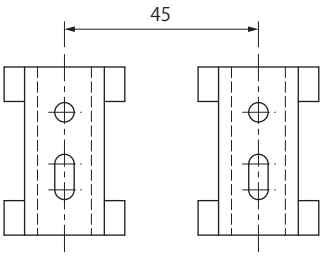

Recommended mounting dimensions

03 Other Equipments for Vacuum
VF
VFL
VFL-M5
FPV
MS
CH-01

VFL-M5 Series

Miniature Vacuum In-line Filter

RoHS

Check the dirt with transparent body. Miniature size, direct mounting!

- Dirty condition of the element can be checked from the outside.
- Space savings, can mounted anywhere.

VFL-M5 series is for vacuum line only.

※Please use only for the vacuum line.

※To protect the vacuum equipment under the dust environment, please use on the line.

Precautions

■Tightening torque

Tightening with excessive torque may cause the filter break, because of its resin material. Please attach with a maximum torque of 0.24N･m.

■Lateral load

Because of its resin material, filter may break in case of excessive lateral load.

How to Order

VFL — M5

Symbol

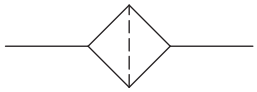

Specifications

Description ＼ Model number	Unit	VFL-M5
Fluid		Air (vacuum), non-corrosive gas, non-flammable gas
Ambient temperature range	℃	0～60(No freezing)
Operating pressure range	kPa	-91.8～0
Withstand pressure	MPa	0.5
Port size		M5X0.8
Filtration	μm	37
Filtration area	mm^2	19
Suitable CONVUM nozzle size	mm	1.0 or less
Tightening torque	N・m	0.24
Weight	g	1

Construction

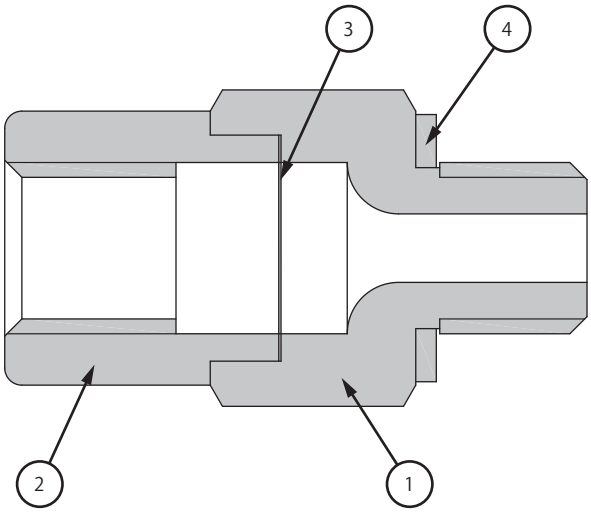

Component Parts

No.	Parts name	Material
1	Body A	PA
2	Body B	PA
3	Element	PA
4	Gasket	-

Dimensions

(mm)

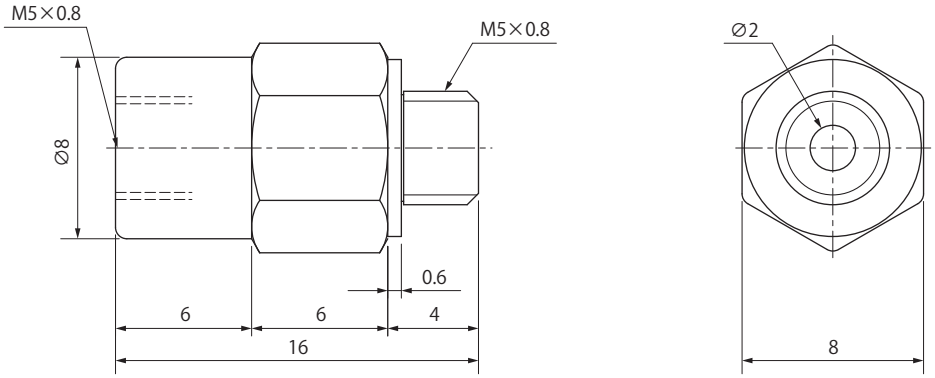

FPV Series

Workpiece Drop Prevention Check Valve

RoHS

For safety handling of several workpieces at the same time!

- Enable using one CONVUM and several cups, in applications where some of the suction cups may not be in contact with the workpiece.

Maintain of suction even if no contact with workpiece!

- When the workpiece has been released from the cup, it closes the air flow path and prevent vacuum pressure drop.

Integrated filter.

- To prevent mixing with dust from suction port. Solving the dust trouble.

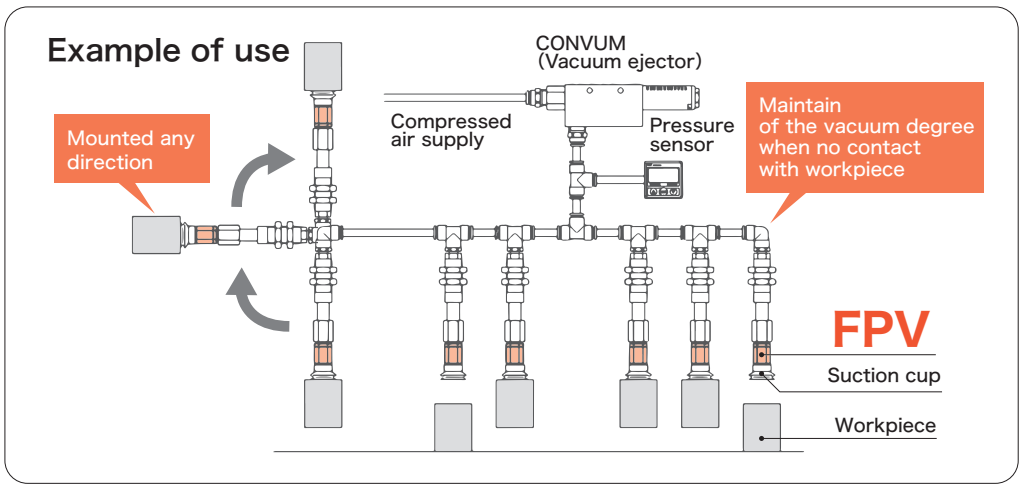

How to Order

FPV — M5

①

① **Attachment Screw (fitting side)**

Symbol	Size
M5	M5X0.8
M6	M6X1.0
R1	R1/8
R2	R1/4

Symbol	Size
R3	R3/8
G1	G1/8
G2	G1/4
G3	G3/8

Symbol	Size
N1	1/8-27 NPT
N2	1/4-18 NPT
N3	3/8-18 NPT

Applicable Cup and Setting Screw

Model number	Applicable cup		
	Cup series		Setting screw
FPV-M5	PAG-10～20A PAG-10～20B PBG-20 PCG-15～20	PDG-4～20 PFG-10～20 PJG-10～25	TN-PF-15-M5 TN-PF-20-M5 TN-PC-10-M5 TN-PS-10-M5
FPV-M6	PAG-10～20A PAG-10～20B PBG-20 PCG-15～20	PDG-4～20 PFG-10～20 PJG-10～25	TN-PF-25-M6 TN-PF-50-M6 TN-PC-30-M6 TN-PA-30-M6
FPV-R1	PFG-15～50 PJG-15～50	-	-
FPV-R2	-	-	-
FPV-R3	-	-	-

Specifications

Description ＼ Model number		Unit	FPV-M5	FPV-M6	FPV-R1/G1/N1	FPV-R2/G2/N2	FPV-R3/G3/N3
Fluid			Air , non-corrosive gas, non-flammable gas				
Ambient temperature range		℃	0～60(No freezing)				
Operating pressure range			-100kPa～0.6MPa				
Min. operating vacuum (air) flow Note1		L/min(ANR)	10		15		
Filtration		μm	25				
Filtration area		mm^2	14	20	50	12	
Attachment screw Note2	Cup side		M5	M6	Rc1/8	Rc1/4	Rc3/8
	Fitting side		M5	M6	R1/8	R1/4	R3/8
Weight		g	6.5	7	12	16	24

Note 1) Minimum operating vacuum (air) flow is the value required at CONVUM side (vacuum source).
Note 2) Check screw details at drawing section.

Symbol

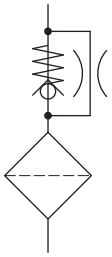

FPV Workpiece Drop Prevention Check Valve

Operating principle

When contact with workpiece	When no contact with workpiece	When releasing workpiece
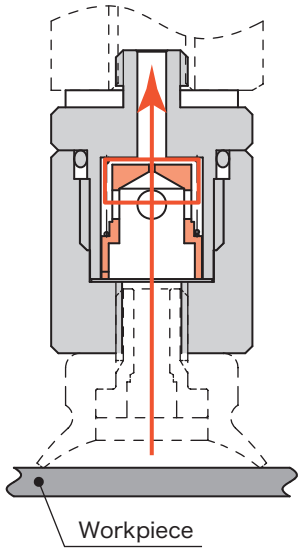	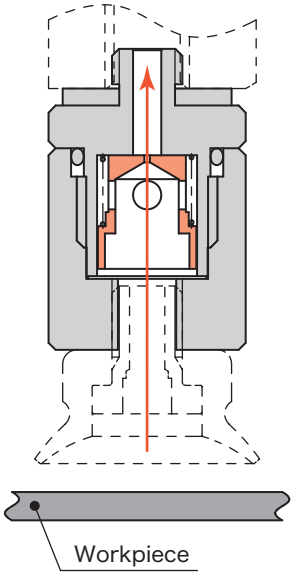	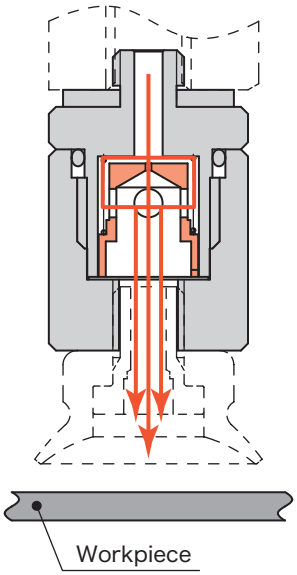
When suction cup grips the workpiece, the valve inside the circuit is pushed down by the spring and the air flow path are released between the valve and the body.	When there is no suction or when the work has been released from the cup, air flows from cup side and push up the valve. It closes the air flow path and prevent vacuum drop from CONVUM side. The central fine orifice let keep sucking air a little.	When releasing the working with a blow-off, compressed air flows from the CONVUM side through the check valve circuit and push down the valve releasing the air flow path. It decreases the vacuum level and the work can be released.

Construction

FPV-M5／M6

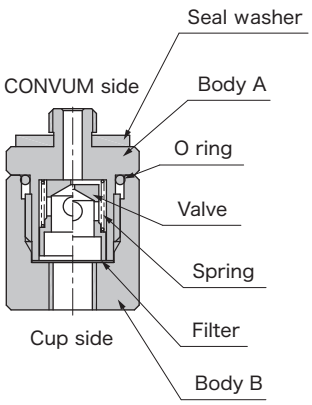

FPV-R／G／N1

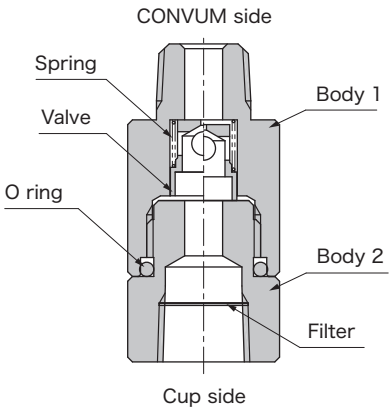

FPV-R／G／N2･3

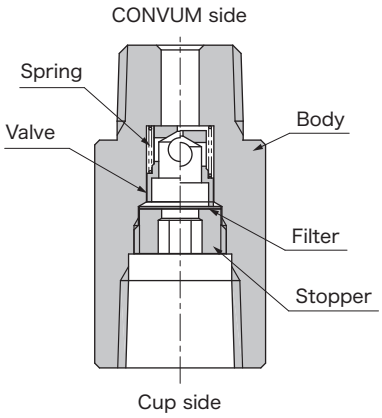

Component Parts

Parts name	Material
Body	Aluminium
Valve	Aluminium
Spring	Stainless
Filter	Stainless
O ring	NBR
Seal washer	NBR

Dimensions

(mm)

FPV-M5

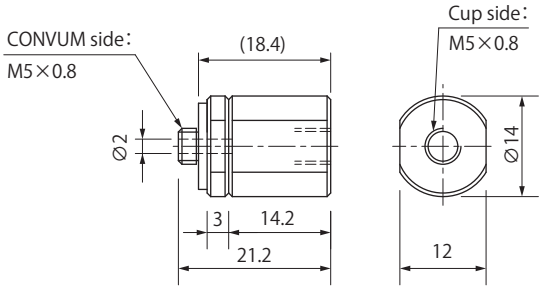

FPV-M6

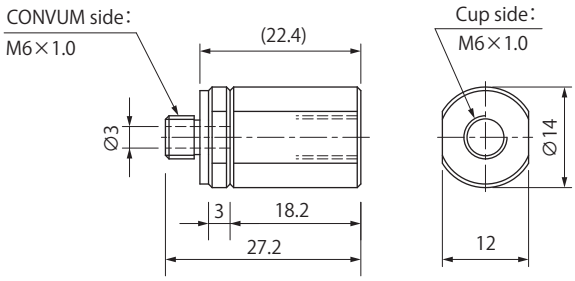

FPV-G1

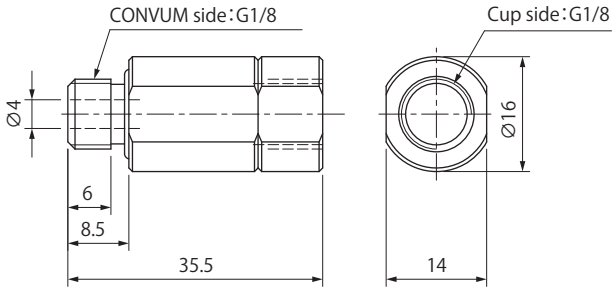

FPV-G2

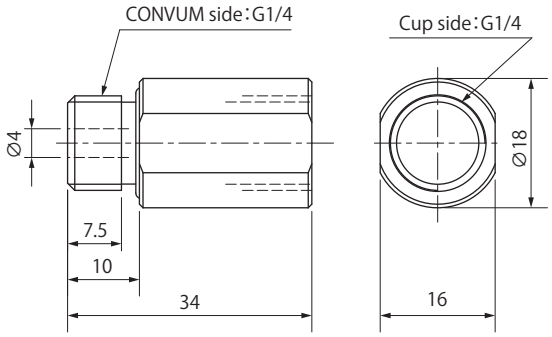

FPV-G3

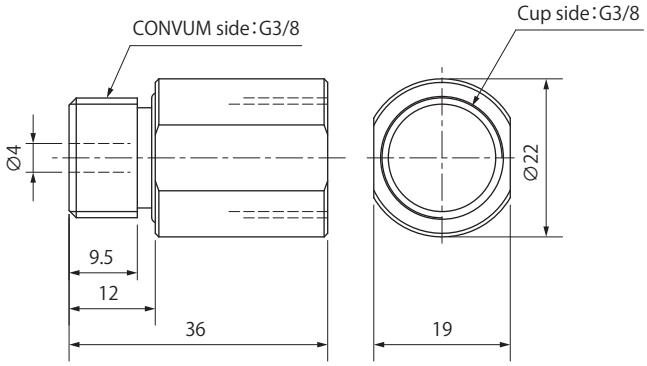

Dimensions

(mm)

FPV-R1/N1

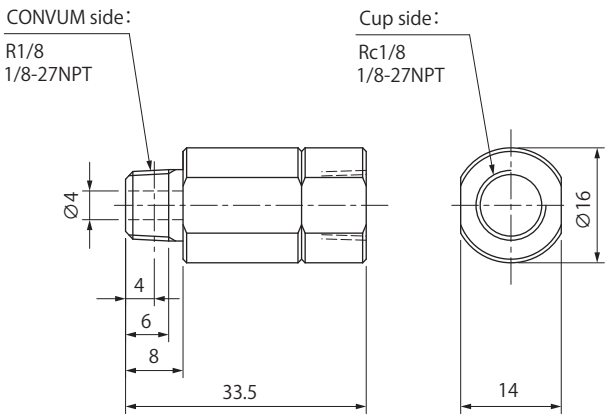

FPV-R2/N2

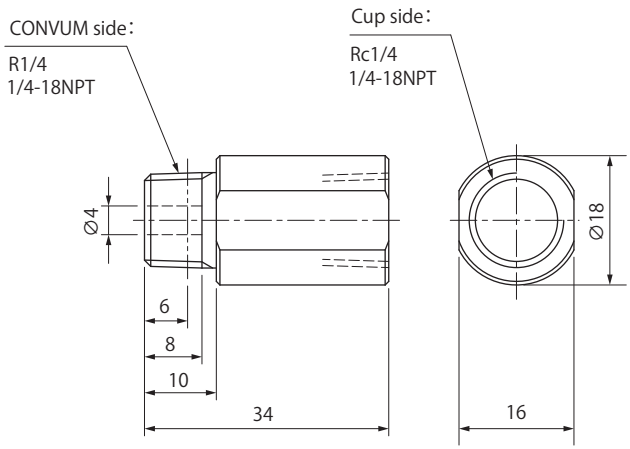

FPV-R3/N3

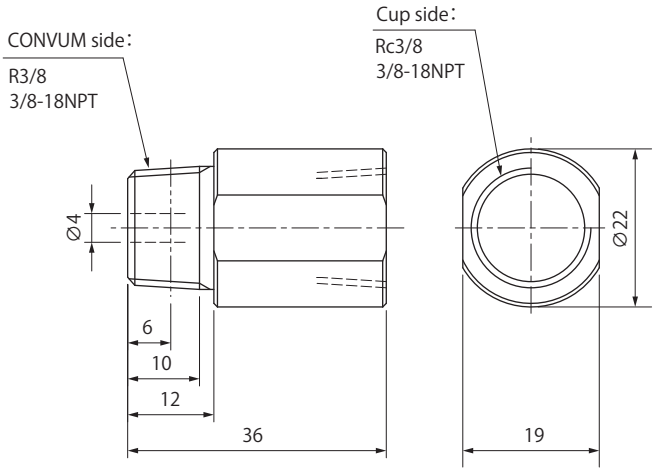

Precautions

① In the case of porous workpiece handling, it may not be possible to handle the workpiece if there is not enough vacuum (air) flow or if there is important leakage.

② The quantity of FPV that may not have contact with the workpiece changes depending on using conditions. Please select suitable quantity after checking CONVUM, vacuum pump specifications (vacuum flow, vacuum pressure characteristics)

③ FPV check valve is not a vacuum maintaining product. Do not use it in this way.

④ Please test FPV valves in real condition on the equipment in the case that you need to check the suction with a signal by using a vacuum sensor set up between the FPV and the suction cup. As there is only few pressure variation, the vacuum degree may not be high enough to get the desired signal.

⑤ Please test FPV valves in real condition on the equipment in the case that you need to use 1 CONVUM with several FPV valves.

⑥ Attachment of FPV: please attach male screw to CONVUM side (vacuum source).

Selection of FPV

○ Vacuum Source : CV CONVUM (P.107)

The below table shows the vacuum (air) flow and vacuum pressure characteristics needed in case of using one CONVUM with several FPV check valves.

Table 1 FPV Performance Table

FPV model number	FPV				
	M5	M6	R1	R2	R3
Min. operating vacuum (air) flow[L/min(ANR)]	10	10	15	15	15
Vacuum drop rate when no contact[kPa]	3	3	8	8	14

※ Above table is in the case of using CV-15HS CONVUM. Values shown are per FPV valve.
※ Piping resistance and CONVUM characteristics have an effect on the vacuum degree decreasing values. Please use this data as reference.
※ Please calculate the exact vacuum drop from CONVUM or vacuum pump vacuum (air) flow and vacuum pressure performance graph.

Table 2 CV CONVUM Performance Table

CONVUM model number	CV									
	10		15		20		25		30A	
	HS	LS	HS	LS	HS	LS	HS	LS	HS	LS
Maximum vacuum pressure [kPa]	-92	-57	-92	-57	-92	-57	-92	-57	-92	-57
Vacuum (air) flow [L/min(ANR)]	27	36	63	95	110	165	160	250	225	350

Table 3 CV CONVUM Suction Flow-Vacuum Pressure Characteristics

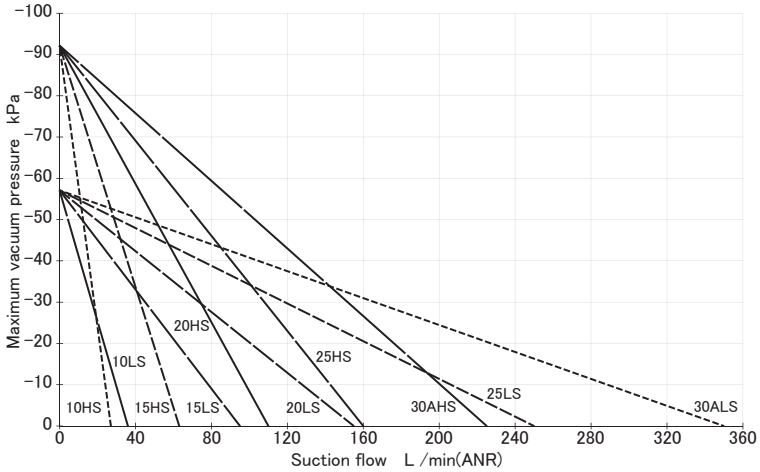

Selection in Case of Using One CONVUM

① We check the possible quantity of FPV without contact with workpiece

CONVUM vacuum (air) flow÷FPV valve min. operating vacuum (air) flow = quantity of FPV valve

< Calculation >
CV-15HS vacuum (air) flow is 63L/min (ANR), FPV-M5. operating vacuum (air) flow is 10L/min (ANR)
63L/min (ANR) ÷ 10L/min (ANR) = 6.3
The possible quantity of FPV valve is 6 pieces.

② We check the maximum vacuum pressure

We check the vacuum drop rate per FPV check valve from table1.
Vacuum drop rate when no contact x FPV quantity = total vacuum drop rate.
We check the maximum vacuum pressure of CONVUM from table 2.
Maximum vacuum pressure - Total vacuum drop rate = Maximum vacuum pressure when using FPV check valve.

< Calculation >
FPV-M5 vacuum drop rate is 3 kPa per check valve.
In this case, total vacuum drop rate is 3kPa × 6 = 18kPa
CV-15HS maximum vacuum pressure is −92kPa
(-92 + 18) = −74kPa
The maximum vacuum pressure is -74kPa when 6 pieces FPV are not in contact .

In the case of using 10 suction cups, all attached with FPV-M5, it means that if 6 of the 10 suctions cups are not in contact with workpiece, suction force of remaining 4 suctions cups is -74 kPa: handling is possible.

Table 4 Estimation of suction cup without contact with workpiece when using CV-15HS

FPV model number	FPV				
	M5	M6	R1	R2	R3
Quantity of FPV without contact	6	6	4	4	2
Vacuum pressure (kPa)	-74	-74	-60	-60	-64

Note) This means the number of the cup to which FPV valves are attached with when there is no contact between the suction cup and the workpiece.

MS Series

Silencer for CONVUM

RoHS

Lightweight, compact ! reduces the exhaust noise.

Silencer mounted on CVA2

Model Number・Applicable CONVUM

Model number	Applicable CONVUM
MSS-01	CV-05／10, CVA2-05／10
MSS-02	CV-05／10
MSS-03	CVA2-10Q
MSM-01	CV-15, CVA2-15H／15L
MSM-02	CVA2-15Q
MSL-02	CV-20
MS6-01	CV-25／30A

Specifications

Description ＼ Model number	Unit	MSS-01	MSS-02	MSS-03	MSM-01	MSM-02	MSL-02	MS6-01
Fluid		Non-lubricated compressed air						
Ambient temperature range	℃	0～60(No freezing)						
Operating pressure range	MPa	0～0.5						
Port size		G1/8			G1/4		R1/2	G3/4
Noise reduction	dB	More than 20						
Weight	g	5			7		25	54

Dimensions

(mm)

MSS-01/03

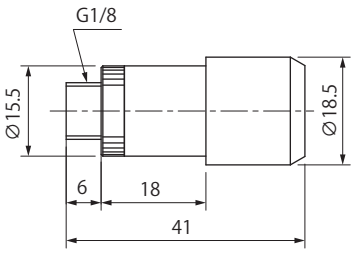

MSM-01/02

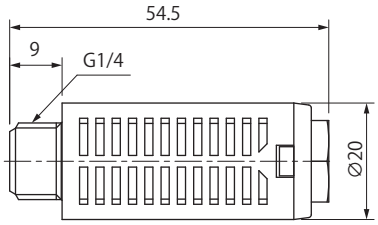

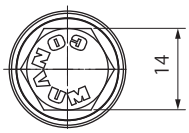

MSL-02

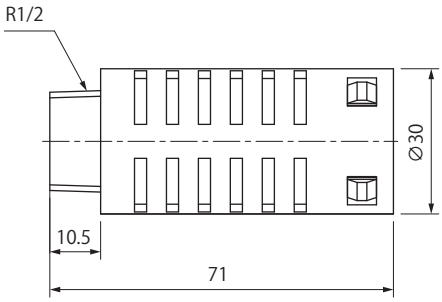

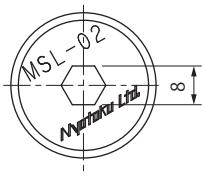

MS6-01

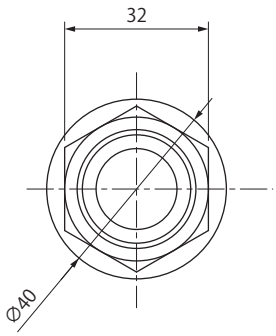

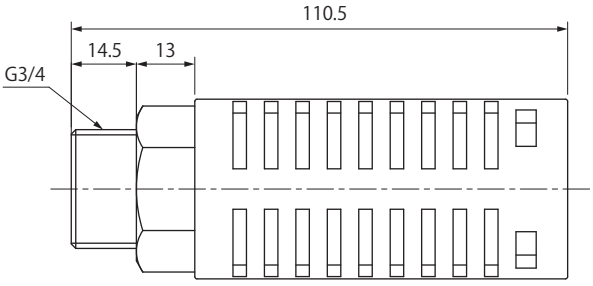

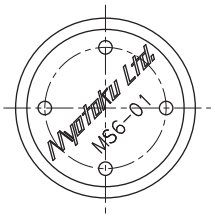

Symbol

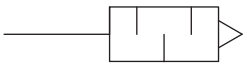

CH-01 Series

Vacuum Check Valve

RoHS

Compact design, maintain of vacuum condition with high sealing!

- Holding the air leakage to a minimum, keeping vacuum condition for a long time.

How to Order

CH — 01

Symbol

Specifications

Description \ Model number		Unit	CH-01
Fluid			Air, non-corrosive gas, non-flammable gas
Ambient temperature range		℃	0～60(No freezing)
Operating pressure range		kPa	-95.8～-29.3
Cracking pressure		kPa	-20
Port size	Cup side		Rc1/4
	CONVUM side		Rc1/8
Weight		g	68

※Air leak may occur when foreign bodies penetrate inside the check valve use a vacuum filter to prevent it.
※Do not use check valve with vacuum pump.

Construction

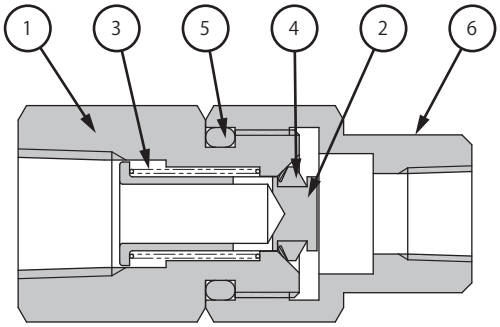

Component Parts

No.	Parts name	Material
1	Fitting A	Brass
2	Valve body	Aluminium
3	Spring	SUS
4	V ring	NBR
5	O ring	NBR
6	Fitting B	Brass

Dimensions

(mm)

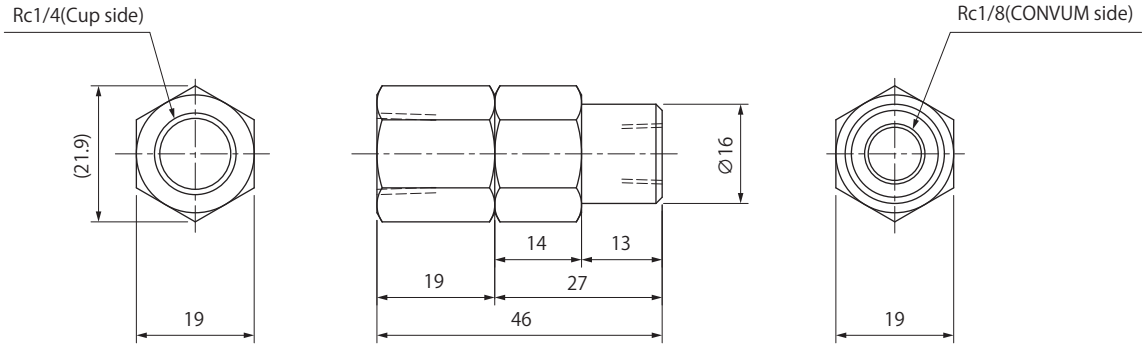

PRESSURE SENSOR

Pressure Sensor Basic Performance P.545

Pressure Sensor Common Precautions P.547

Dual Display 3 Colors Digital Pressure Sensor MPS-35 series P.549

Digital Display Pressure Sensor MPS-23 series P.555

Slim Type Digital Display Pressure Sensor MPS-9 series P.561

Digital Display Pressure Sensor with Solenoid Valve Control MPS-10 series P.567

Digital Display Pressure Sensor with Solenoid Valve Control MVS-201 series P.573

Electronic Pressure Sensor MVS-030AB series P.579

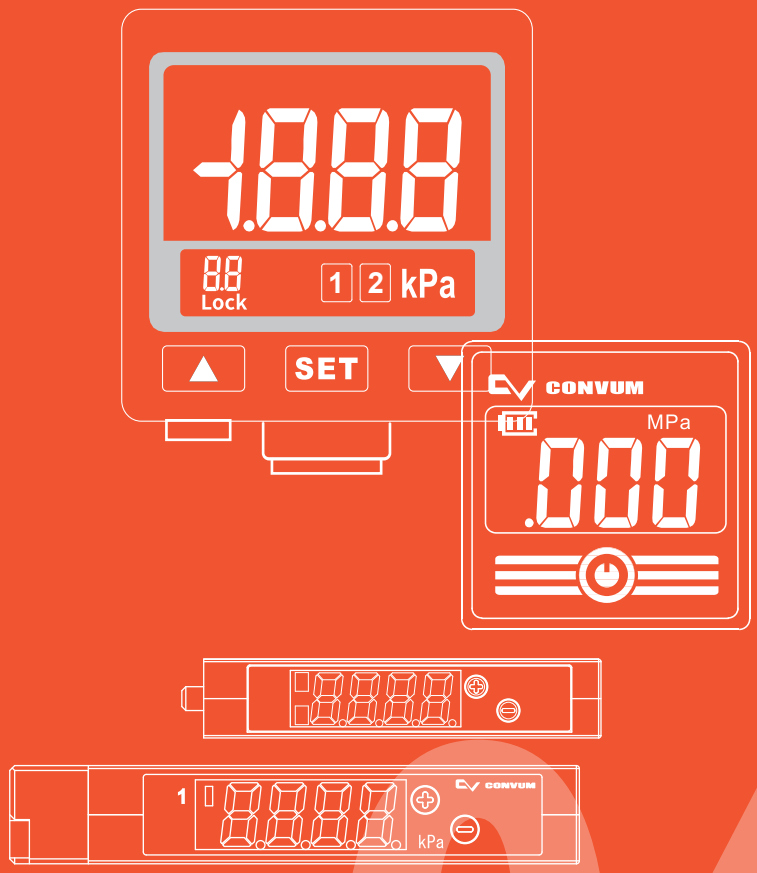

04

Pressure Sensor Basic Performance

Series/Description			MPS-35	MPS-23		
			Dual Display 3 Colors Digital	Digital Display		
Fluid			Air, non-corrosive gas, non-flammable gas			
Diaphragm			Silicon diaphragm			
Rated pressure range		V range	-101.3~0kPa	-101~0kPa		
		P range	0~1MPa	0~1MPa		
		R range	C range： -100~100kPa	-101~500kPa		
Setting pressure range		V range	-101.3~10kPa	-101.3~10kPa		
		P range	-0.1~1MPa	-0.1~1MPa		
		R range	C range： -101~101kPa	-101 ~ 500kPa		
Power supply voltage		V	DC12~24	DC12~24		
Current consumption		mA	40	55		
Switch output	NPN open collector		●	●		
	PNP open collector		●	●		
	Number of outputs		2	2		
	Maximum load current (mA)		125	80		
Analog output	Voltage	V	DC1~5	DC1~5		
	Current	mA	-	-		
Display			3 1/2 digits, 7-segment, red, green, orange LCD	3 1/2 digits, 7-segment, red LED		
Response time		ms	2.5 or less	2.5 or less		
Cable			Connector	Grommet		
Port size			R1/8 (with M5 female screw)	R1/8, NPT1/8, G1/8 (with M5 female screw) or convex port for CONVUM		
IP class			IP40	IP40		
Applicable CONVUM/Vacuum switching valve series			-	MC22	MC72	MPV3
Page	CONVUM・Vacuum switching valve			**P.073**	**P.085**	**P.599**
	Single		**P.549**	**P.555**		

	MPS-9			MPS-10			MVS-201			MVS-030AB			
	Slim Type Digital Display			Energy Saving			Energy Saving			Electronic			
	Air, Non-corrosive gas, Non-flammable gas												
	Silicon diaphragm												
	-101.3～0kPa			-			-			-101～0kPa			
	C range： -100～100kPa			-			-			-			
	-101～500kPa			-101～500kPa			-101～500kPa			-			
	-101.3～10kPa			-			-			-101.2～-2.7kPa			
	C range： -101～101kPa			-			-			-			
	-101～500kPa			-101～500kPa			-101～500kPa			-			
	DC12～24			DC24			DC24			DC12～24			
	40			50			45			20			
	●			●			●			●			
	●			●			●			-			
	1			1			1			1			
	125			125			125			80			
	DC1～5			DC1～5			-			-			
	-			-			-			-			
	4 digits, 7-segment, red LED			4 digits, 7-segment, red LED			3 digits, 7-segment, red LED			-			
	1.5 or less			1.5 or less			2.5 or less			2 or less			
	Connector			Connector			Connector			Grommet			
	M 5 (female screw) or ϕ 3 convex port for CONVUM			ϕ 3 convex port for CONVUM			convex port for CONVUM			R1/8 (with M5 female screw) or convex port for CONVUM			
	IP40			IP40			IP40			IP40			
	SC1	SC2	SC3	SC1	SC2	SC3	MC22	MC72	MPV3	MC22	MC72	CVA2	MPV3
	P.035	**P.047**	**P.057**	**P.035**	**P.047**	**P.057**	**P.073**	**P.085**	**P.599**	**P.073**	**P.085**	**P.117**	**P.599**
	P.561			**P.567**			**P.573**			**P.579**			

Pressure・Vacuum Sensor/ Common Precautions

Make sure to read these cautions before use.
Make sure to also read and understand the "Safety instructions for each series of products".

Design・Selection

WARNING

- **Please read the specifications and make sure to use within the range specified.**

Load current, voltage, temperature, shocks, etc., that are not within the range of the specifications may damage the vacuum sensors and cause poor operation. Therefore, please read the specifications carefully and use within the specified range.

CAUTION

- **Make sure to read the instruction manual before using.**

Please start using after having read the instruction manual and understood the setting method of the vacuum sensors. Also, please keep the instruction manual in a place where you can easily find.

- **This product is used solely for pressure detection and is not meant to protect against accidents.**

Wiring

WARNING

- **Make sure that the lead wire is not subjected to repeated bending or stretching forces.**

When installing the vacuum sensor on a moving part, make sure that the lead wire is not subjected to repeated bending or stretching forces. Please leave some slack in the wiring.
Repeated bending and stretching may cause the lead wire to break.

- **Make sure that there is no insulation.**

Please make certain that there is no failure of the lead wire, extension cable or terminals. If the insulation is poor, the vacuum sensor may be subjected to over-current, resulting in damage.
Especially when not using analogue output, cut the analogue lead and use insulating tape to insulate it.
V23G : Orange lead wire

Wiring

WARNING

- **Please connect the wiring correctly according to the coloring of the lead wire and the terminal numbers.**

When connecting, make absolutely sure to switch off the electricity of the power source.

- **Make sure not to connect the wiring incorrectly.**

In the case of DC, make sure not to reverse the polarity (+) (-).

- **As for the digital output (open collector output), make sure not to connect to loads that exceed the rated voltage and rated current even for a brief moment.**

- **Do not connect wiring together with power lines or high-voltage lines.**

connect out the wiring at a proper distance from power lines and high-voltage lines as there is a possibility that the vacuum sensor and other control circuits may operate erratically by noise.

Usage environment

DANGER

- **Please do not use in a place where there is a risk of explosion or fire.**

The vacuum sensor does not have an antiexplosion design. As there is a risk of accidents due to explosion and fire in environments with explosive gas, make absolutely sure not to use the vacuum sensor in such environments.

WARNING

- **Please do not use the vacuum sensors where there is magnetism or strong electric currents.**

as strong magnetism and strong electric currents (large batteries and spot welding equipment, etc.) may cause the vacuum sensors to malfunction.

- **Please do not use the vacuum sensors in places that are constantly subjected to water.**

Although, with the exception of some vacuum sensors (please see the specifications), most sensors conform to IEC standard IP67 or IP65, do not use the vacuum sensors in places that are constantly subjected to water, as it may result in poor in sulation and incorrect operation.

Usage environment

DANGER

- **Do not use the vacuum sensors where there is oil or chemicals.**

As the vacuum sensors may be negatively affected even if briefly subjected to coolants, detergents and various types of oils and chemicals, please contact us for advice.

- **Please do not use the vacuum sensors in places subjected to extreme temperature fluctuations.**

If the vacuum sensors are used in places subjected to extreme temperature fluctuations, outside of normal climatic fluctuations, the inner parts of the vacuum sensors may be negatively affected. Please contact us for advice.

- **Please do not use the vacuum sensors in places subjected to excessire shocks.**

Great shocks may result in malfunction.

Selection

WARNING

- **Please confirm the specifications.**

The compatibility of our product is the responsibility of the person who designs the equipment or decides its specifications. Also, please based on necessary analysis and test results. Please do not use at other pressures or temperatures than those specified as it may cause damage or poor operation.
The expected performance and safety assurance of the equipment will be the responsibility of the person who has determined its compatibility with the product.

Handling

WARNING

- **Please do not insert screwdrivers or other metallic object in the pressure inlet port. If the diaphragm is damaged, the vacuum sensors will not operate normally.**

- **When attaching air pressure couplings and nipples on the market to the pressure port,make sure not to apply too much force to the resin section of the main unit.**

A wrench may be used on the adapter only, but absolutely not on any other part.

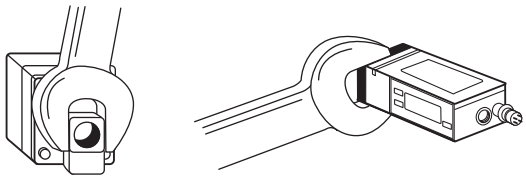

- **The pressure resistance differs depending on the type of vacuum sensor, so please read the specifications thoroughly and make sure that excessive pressure is not applied.**

MPS-35 Series

Dual Display 3 Colors Digital Pressure Sensor

RoHS

Easy checking with 3 colors display!

Flexible combination can select

Main display
Current values red·green

Sub display
Setting values orange

User can always check the setting values form sub-display

The display color pattern can selected

	SoG	Sor	Grn	rEd
ON	Green	Red	Green	Red
OFF	Red	Green	Green	Red

Easy to set by UP, DOWN button

Big button easy to operate

UP, DOWN simple setting

Finished setting

9% energy consumption can be reduced compared to previous model (MPS-34)

Previous model:MPS-34:45mA → New model:MPS-35:40mA **9% reduced**

Connector type, easy to install

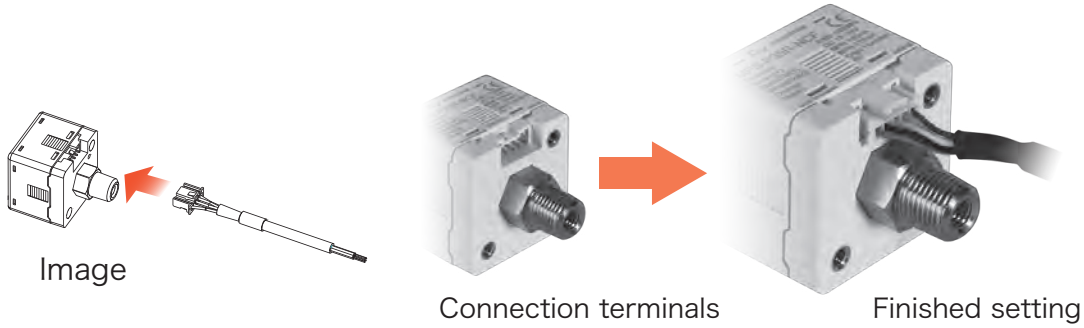

How to Order

MPS — V 35 R — N C A

① ② ③

Analog Output
1 ~ 5V Voltage output

Cable
5PIN with connector (2m)

① Pressure Range

Symbol	Type	Range
V	Vacuum	-101.3 ~ 0kPa
P	Positive	0 ~ 1MPa
C	Compound	-100 ~ 100kPa

② Port Size

Symbol	Specifications
R	R 1/8

※Please consult with us for NPT 1/8,G1/8 (male).

③ Output Type(Switch output)

Symbol	Specifications
N	NPN open collector
P	PNP open collector

Option Parts

Front Mounting Panel
MPS-ACCH9

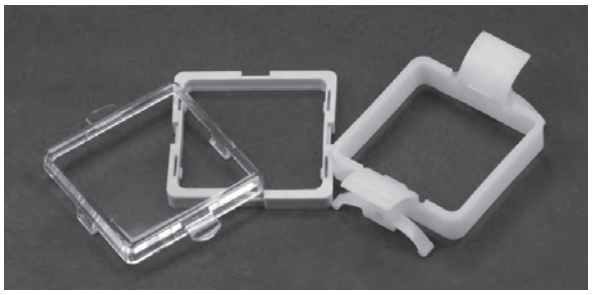

Mount frame (2 types) with protection cover.

Bracket Fitting
MPS-ACCK11

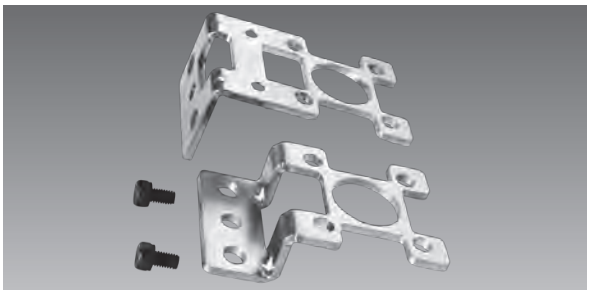

L type fitting, F type fitting, and
2 setting screws (M3).

Specifications

Description ＼ Model number		Unit	MPS-V35	MPS-P35	MPS-C35
Fluid			Air, non-corrosive gas, non-flammable gas		
Diaphragm			Silicon diaphragm		
Rated pressure range			-101.3～0kPa	0～1MPa	-100～100kPa
Setting pressure range			-101.3～10kPa	-0.1～1MPa	-101～101kPa
Withstand pressure		MPa	0.3	1.5	0.3
Ambient temperature range		℃	0～50 (No freezing)		
Ambient humidity range		%RH	35～85 (No condensation)		
Port size			R1/8 (with M5 female screw)		
Power supply voltage		V	DC12～24±10%, ripple(Vp-p)10% or less		
Maximum power consumption		mA	40 (No load)		
Switch output	Type		NPN or PNP open collector 2 outputs		
	Maximum load current	mA	125		
Analog output		V	DC1～5V(±2.5) linearity1% F.S. output impedance1kΩ		
Repeatability		%	±0.2 F.S. 1digit or less		
Temperature characteristic		%	Less than±2.5F.S. (At standard temperature 25℃, range0～50℃)		
Response time		ms	2.5 or less		
Hysteresis			Variable		
Display	Digital		3 1/2-digits, 7-segment, 3 colors (red, green, orange)		
	Operation		Orange (1 & 2 indicator light) OUT1 OUT2		
Display/set resolution			0.1kPa	0.001MPa	0.1kPa
IP class			IP40		
Vibration resistance			10～55Hz, total amplitude 1.5mm, 50m/s^2 2 hours each direction of XYZ		
Shock resistance		m/s^2	100 3 times each direction of XYZ		
Electrical connection			Connector		
Cable			ϕ4 0.15mm^2 5 lead wires 2m		
Weight	Without cable	g	34		
	With cable		80		

Internal Circuit

NPN Output (Analog voltage output)

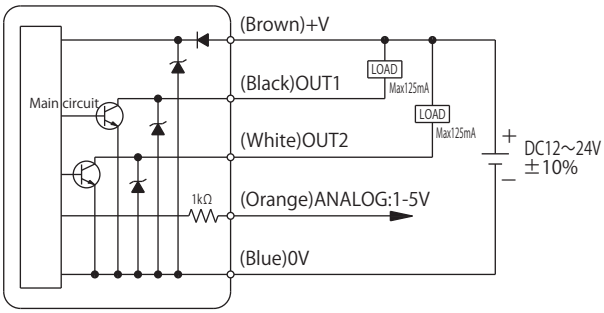

PNP Output (Analog voltage output)

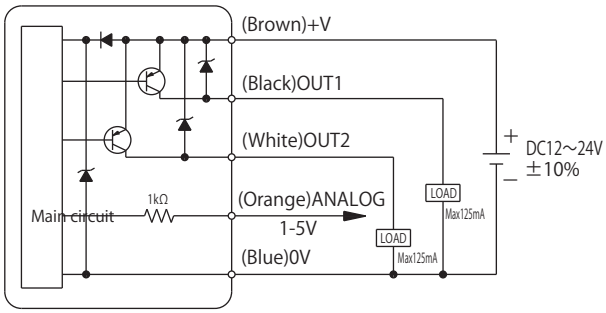

Display Description

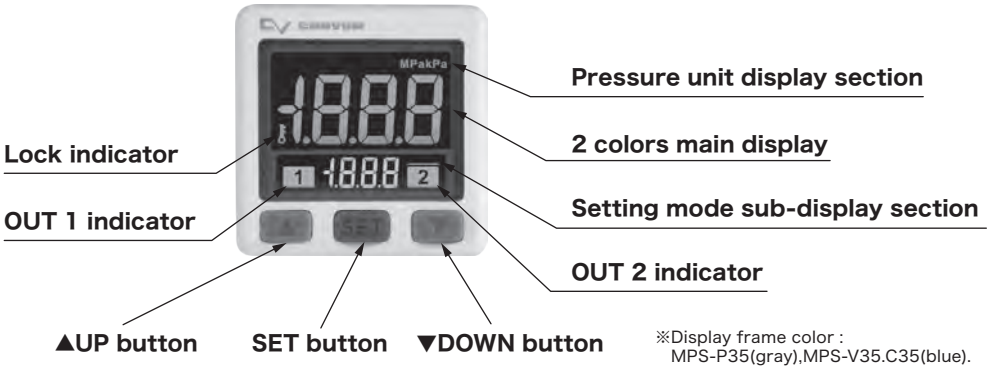

※Display frame color :
MPS-P35(gray),MPS-V35.C35(blue).

Setting・Function

※ Please refer to the instruction manuals for details.

INITIAL SETTING MODE

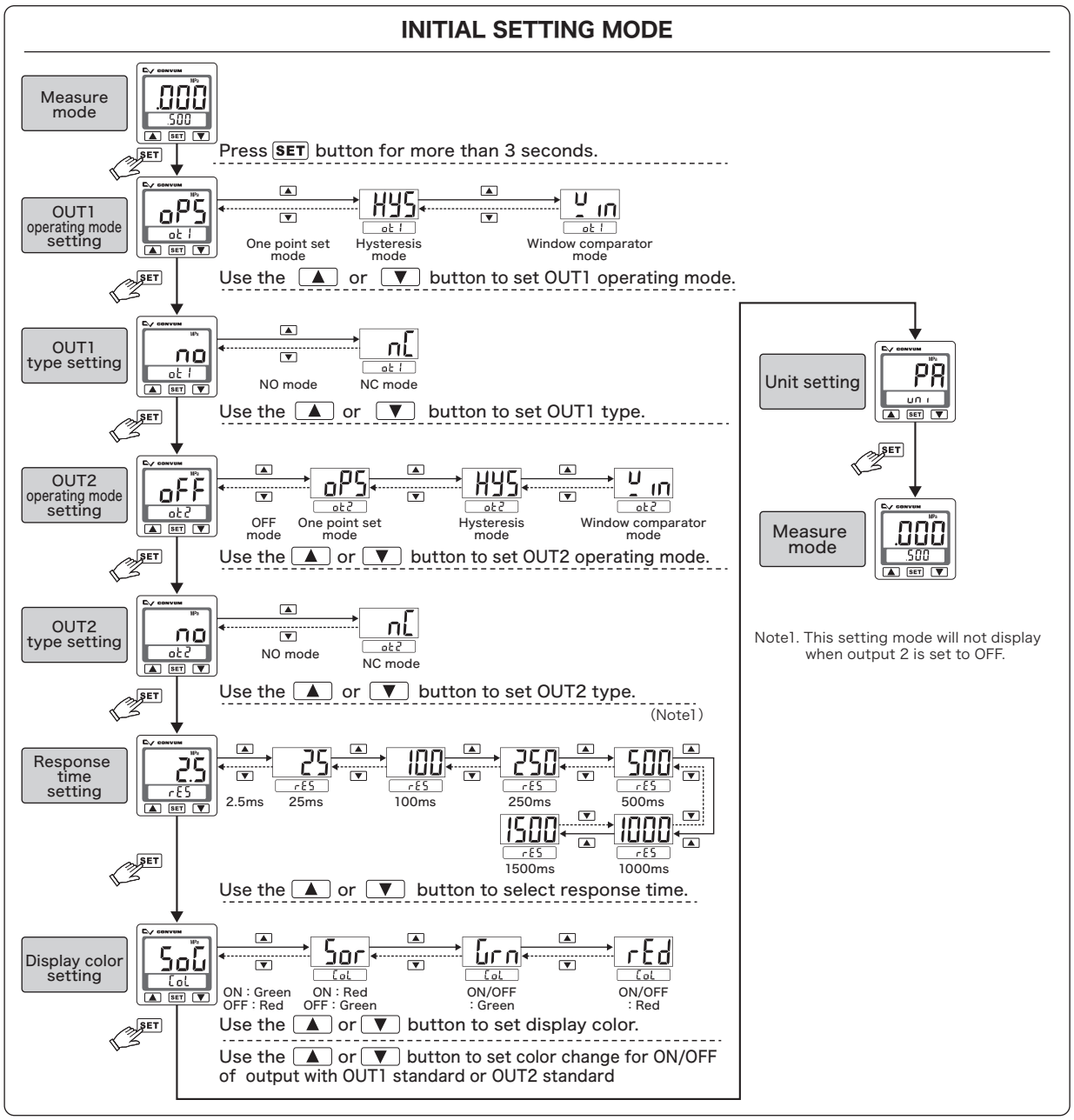

Note1. This setting mode will not display when output 2 is set to OFF.

Setting・Function

※ Please refer to the instruction manuals for details.

POWER-SAVE MODE

- During power-save mode, the main display will turned off if no buttons is pressed after 30 seconds.
- During power-save mode, the output LCD may not be synchronize with the output. It is normal and will not affect output operation.
- Press any button to turn-on main display temporarily.

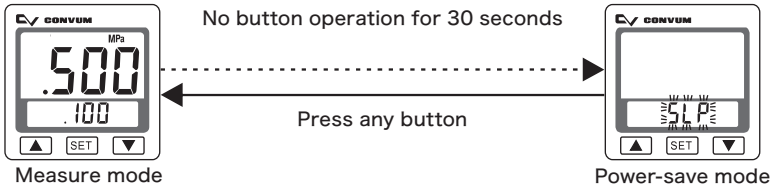

Main display is off, sub-display will flash "SLP"

KEY LOCK/UNLOCK MODE

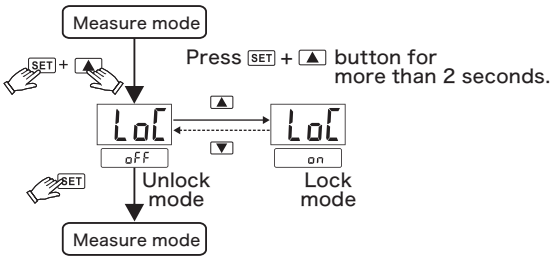

- Use key lock mode to prevent unauthorized or accidental tampering with the switch setting.
- When lock mode is selected, panel will display "⚷"

ZERO POINT SETTING

Press the ▲ + ▼ button at the same time until the "00" is shown. Release the button to end zero setting.

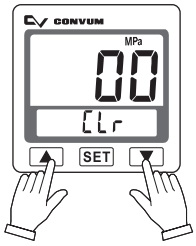

ERROR CODE INSTRUCTION

Error type		Error code	Error condition	Trouble shooting
Excess load current error	OUT1	Er1	Output 1 load current is more than 125 mA.	Turn power off and check the cause of overload current or lower the current load under 125 mA, then restart.
	OUT2	Er2	Output 2 load current is more than 125 mA.	
Residual pressure error		Er3	During zero reset, input pressure is over ±3% F.S. of ambient pressure.	Change input pressure to ambient pressure and perform zero reset again.
Applied pressure error		HHH	Supply pressure is exceeding the upper limit of pressure setting.	Adjust the pressure within operating pressure range.
		LLL	Supply pressure is exceeding the lower limit of pressure setting.	
System error		Er4	Internal system error	Turn power off, and then restart. If error condition remains, please contact us.
		Er5	Internal system error	
		Er6	Internal data error	
		Er7	Internal data error	

Dimensions

(mm)

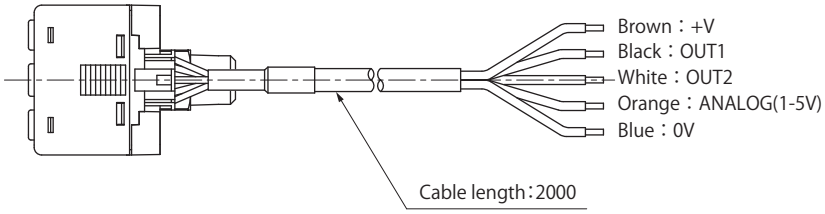

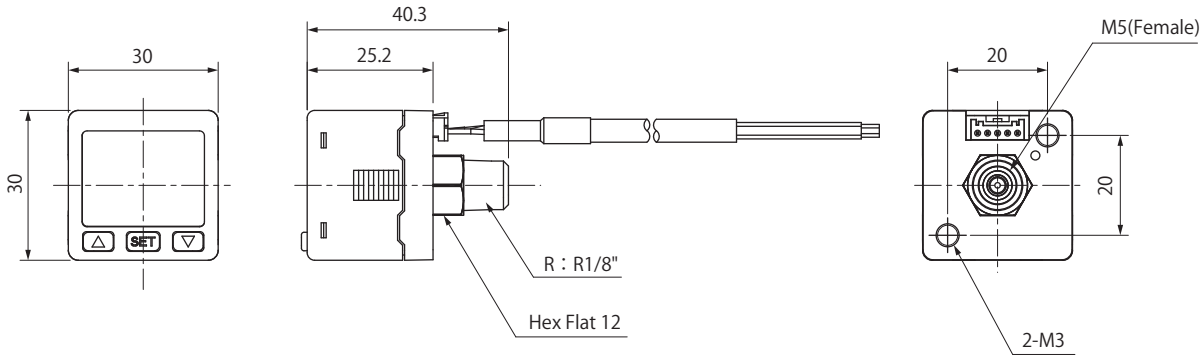

■ L Bracket Fitting

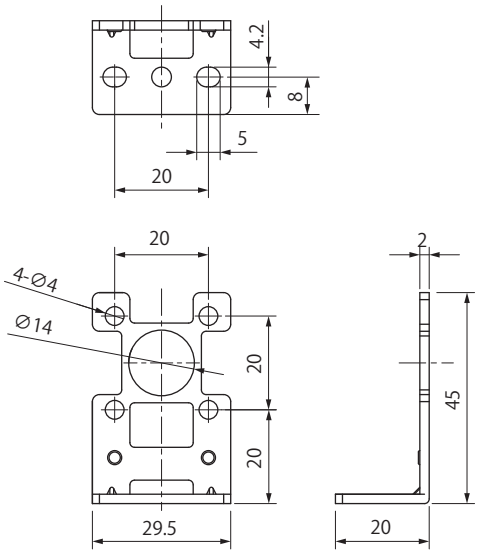

■ F Bracket Fitting

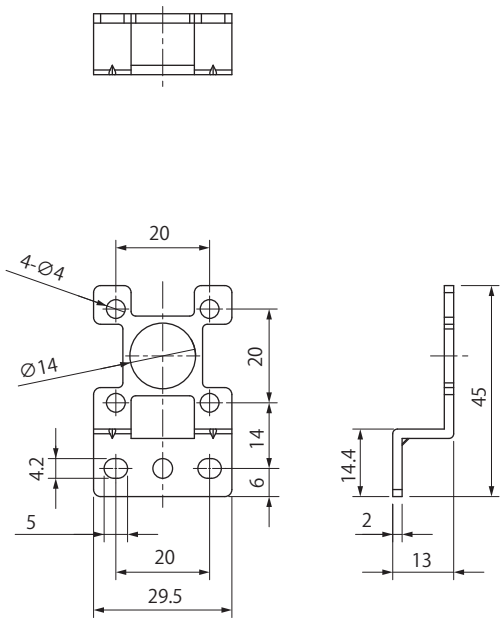

■Front Mounting Panel

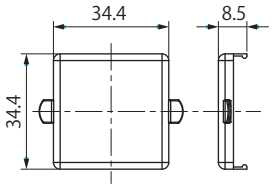

■ Panel Adapter A

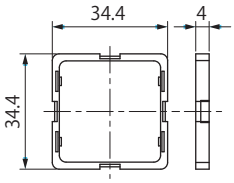

■ Panel Adapter B

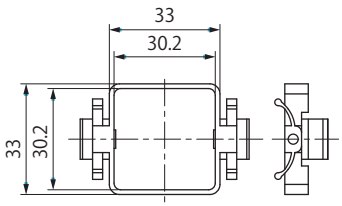

■Panel Cut

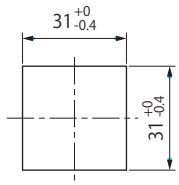

Board thickness：4.5mm or less

MPS-23 Series

Digital Display Pressure Sensor

RoHS

04 Pressure sensor
MPS-35
MPS-23
MPS-9
MPS-10
MVS-201
MVS-030AB

Compact, clear display!

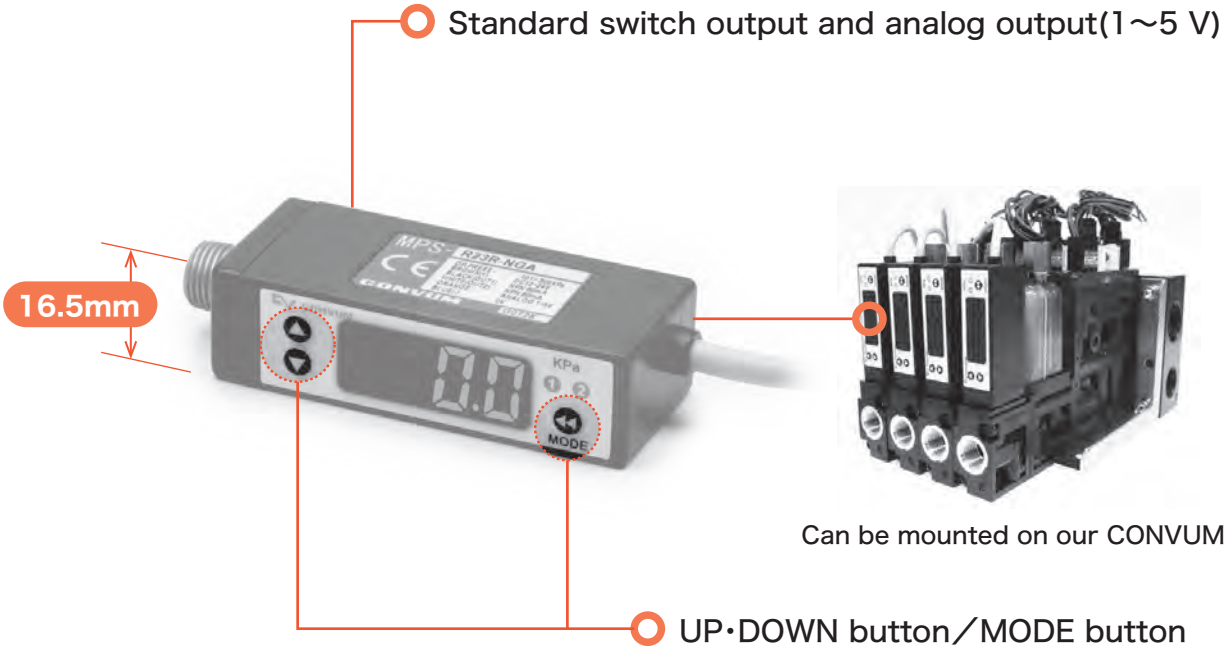

Easy to set by 3 buttons.

How to Order

• Single Type

MPS — V 23 R — N G A

① ② ③

Analog Output
1 ～ 5V Voltage output

Cable
Grommet (with lead wire 2m)

① Pressure Range

Symbol	Type	Range
V	Vacuum	-101～0kPa
P	Positive	0～1MPa
R	Compound	-101～500kPa

② Port Size

Symbol	Specifications
R	R1/8 (Male)
N	NPT1/8 (Male)
G	G1/8 (Male)
C	for CONVUM Note

Note) Without base, mounting screw.

③ Output Type(Switch output)

Symbol	Specifications
N	NPN open collector
P	PNP open collector

• CONVUM Mounting Type

MPS — V 23 C — N G A — MC22

① ② ③

① Pressure Range

Symbol	Type	Range
V	Vacuum	-101～0kPa
R	Compound	-101～500kPa

② Output Type(Switch output)

Symbol	Specifications
N	NPN open collector
P	PNP open collector

③ Applicable CONVUM

Symbol	Applicable CONVUM
MC22	MC22
MC7	MC72
MPV3	MPV3

Specifications

Description ＼ Model number		Unit	MPS-V23	MPS-P23	MPS-R23
Fluid			Air, non-corrosive gas, non-flammable gas		
Diaphragm			Silicon diaphragm Note1		
Rated pressure range			-101～0kPa	0～1MPa	-101～500kPa
Setting pressure range			-101.3～10kPa	0.1～1MPa	-101～500kPa
Withstand pressure		MPa	0.3	1.5	0.8
Ambient temperature range		℃	0～50(No freezing)		
Ambient humidity range		%RH	35～85(No condensation)		
Port size			R1/8, NPT1/8, G1/8(Male with M5 female screw)		
Power supply voltage		V	DC12～24±10%, ripple(Vp-p)10% or less		
Maximum power consumption		mA	55		
Switch output	Type		NPN or PNP open collector 2 outputs		
	Maximum load current	mA	80		
Analog output		V	DC1～5V(±0.1) linearity 0.5% F.S. output impedance1kΩ Note2		
Repeatability		%	±0.2F.S 1digit or less		
Temperature characteristic		%	Less than±2 F.S. (At standard temperature 25℃, range0～50℃)		
Response time		ms	2.5 or less (Variable 24, 192, 768 options)		
Hysteresis			Variable		
Display	Digital		3 1/2-digits, 7-segment, red LED		
	Operation		OUT1:Green LED(ON lighting), OUT2:Red LED(ON lighting)		
Display/set resolution			0.1kPa	0.001MPa	1kPa
IP class			IP40		
Vibration resistance			10～55Hz, total amplitude 1.5mm, 50m/s^2 2 hours each direction of XYZ		
Shock resistance		m/s^2	980 3 times each direction of XYZ		
Electrical connection			Grommet		
Cable			ϕ4 0.15mm^2 5 lead wires 2m		
Weight (with cable)		g	135		

Note 1) Non grease specifications.
Note 2) Analog output of positive pressure type (P) in range of pressure 0 to 1 Mpa can output DC1-5V. In range of pressure -0.1 to 0 it does not output.

Internal Circuit

NPN Output (Analog voltage output)

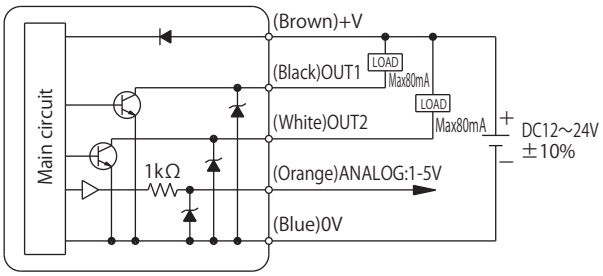

PNP Output (Analog voltage output)

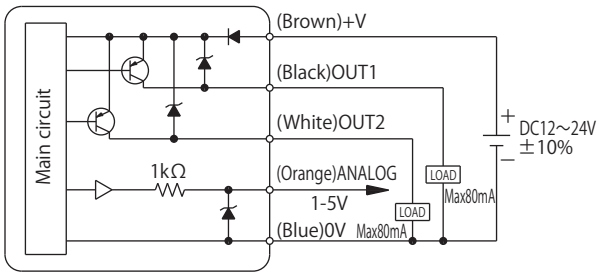

Display Description

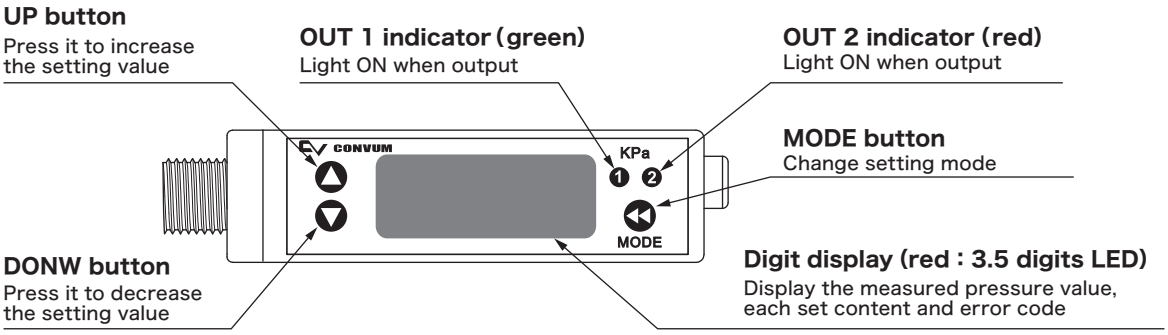

Setting・Function

※ Please refer to the instruction manuals for details.

INITIAL SETTING MODE

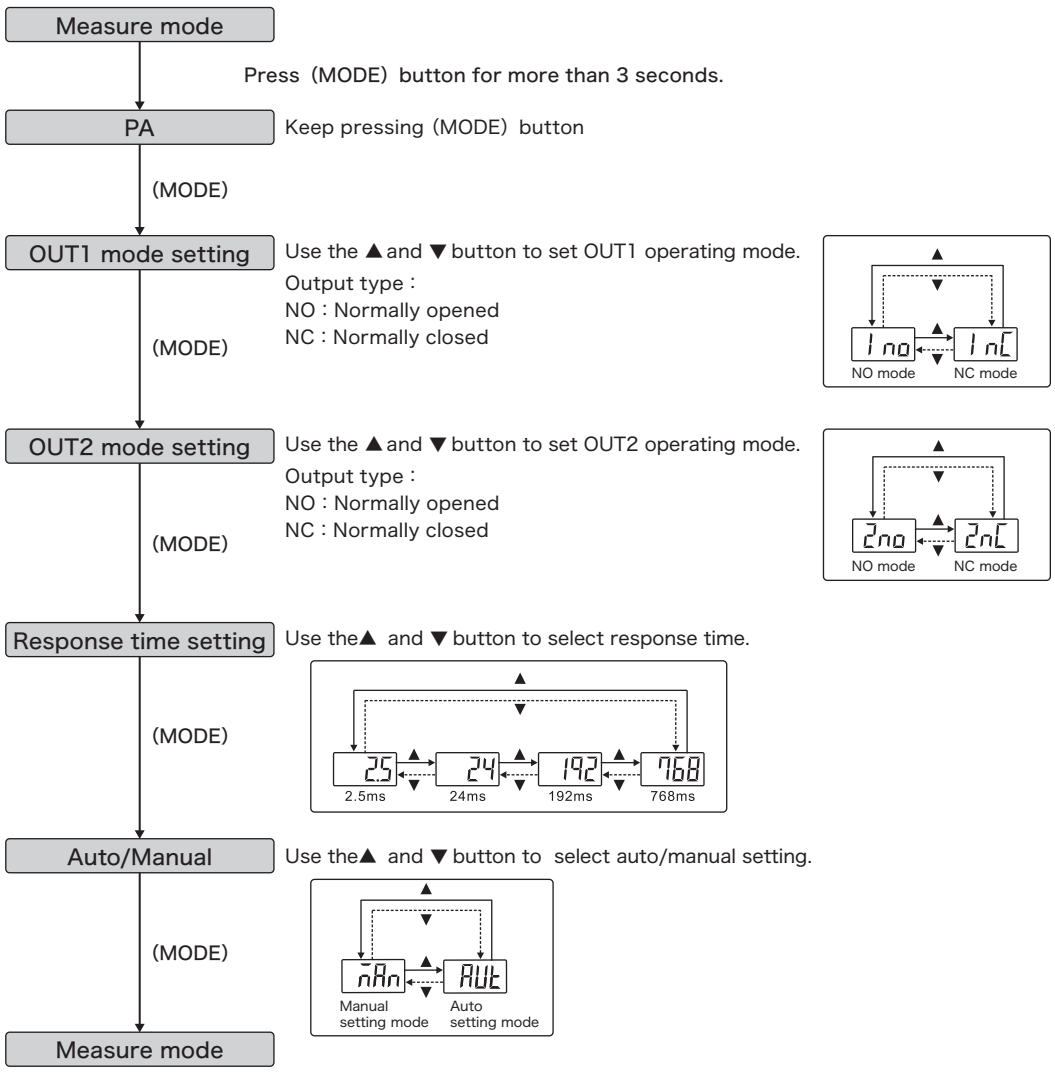

Setting・Function

※ Please refer to the instruction manuals for details.

MANUAL SETTING MODE

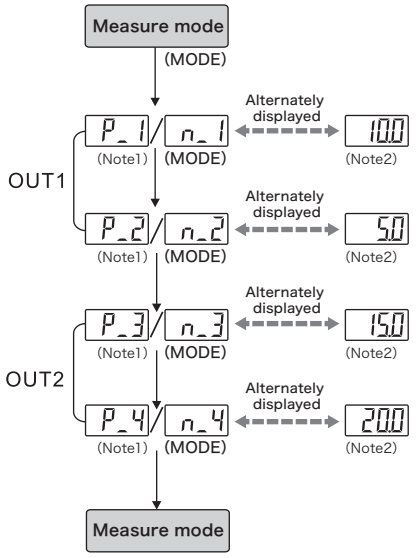

Note1. When normally opened is selected, it displays 「P_*」, When normally closed is selected, it displays 「n_*」.

Note2. Pressure value change
When pressing one time to ▲ button, one digit increases.
When keep pressing, setting value keep increasing.
When pressing one time to ▼ button, one digit decreases.
When keep pressing, setting value keep decreasing.

AUTO SETTING MODE

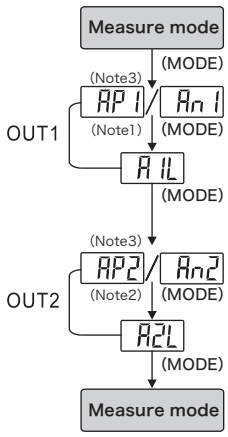

Press MODE button to select normally closed 「An1」 or normally opened 「AP1」 of OUT1.
Press MODE button again,display shows 「A1L」.
Under this mode, the device needs to be set repeatedly in order to reach the auto setting value.

Press MODE button to select normally closed 「An1」 or normally opened 「AP1」 of OUT2.
Press MODE button again,display shows 「A1L」.
Under this mode, the device needs to be set repeatedly in order to reach the auto setting value.

Note1. In case of without need of OUT1 pressure value setting, press ▲ + ▼ at the same time to enter 「AP2」 / 「An2」.

Note2. In case of without need of OUT2 pressure value setting, press ▲ + ▼ at the same time to enter measure mode.

Note3. The LED show 「AP*」 at normally opened mode and 「An*」 at normally closed mode.

【Calculation of setting value】
A=The max. pressure value under auto setting mode.
B=The min. pressure value under auto setting mode.

$$P1(n1),\ P3(n3) = A - \frac{A-B}{4}$$

$$P2(n2),\ P4(n4) = B + \frac{A-B}{4}$$

ZERO POINT SETTING

Press the▲ ▼ button at the same time until the 【00】 is shown.

KEY LOCK/UNLOCK MODE

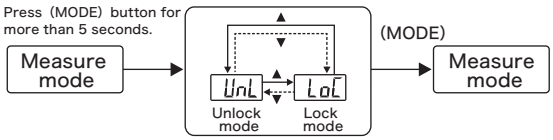

Use ▲ and ▼ button to select lock/unlock mode.
Key lock mode can prevent operation mistakes.

ERROR CODE INSTRUCTION

Error type		Error code	Error condition	Trouble shooting
Excess load current error	OUT1	Er1	Output 1 load current is more than 80 mA.	Turn power off and check the cause of overload current or lower the current load under 80 mA, then restart.
	OUT2	Er2	Output 2 load current is more than 80 mA.	
Residual pressure error		Er3	During zero reset, input pressure is over ±3% F.S. of ambient pressure.	Change input pressure to ambient pressure and perform zero reset again.
Applied pressure error		---	Supply pressure is exceeding the upper limit of pressure setting.	Adjust the pressure within operating pressure range.
		----	Supply pressure is exceeding the lower limit of pressure setting.	
System error		Er4	Internal data error	Turn power off, and then restart. If error condition remains, please contact us.
		Er6	Internal system error	
		Er7	Internal data error	
		Er8	Internal system error	

Dimensions

(mm)

Single Type

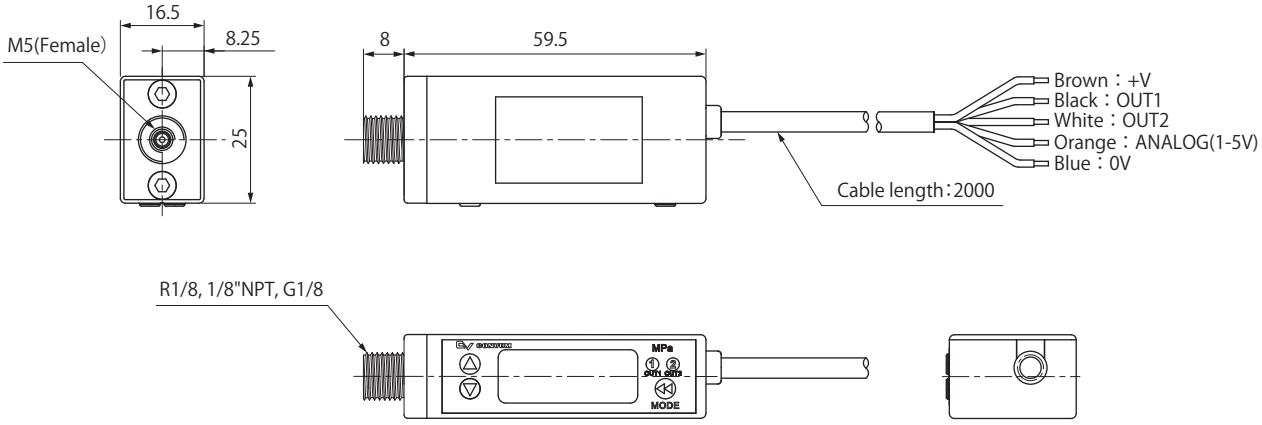

CONVUM Mounting Type

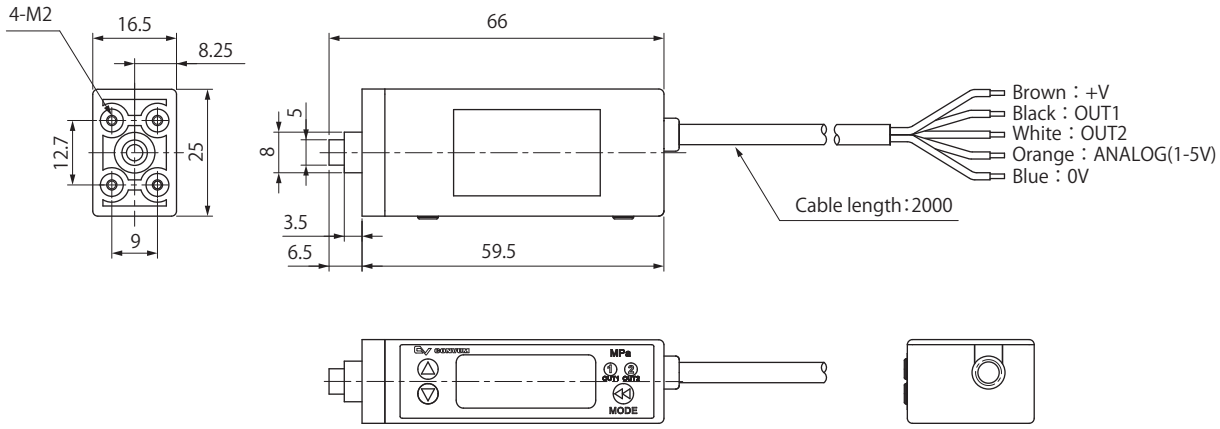

MPS-9 Series

Slim Type Digital Display Pressure Sensor

RoHS

04 Pressure sensor
MPS-35
MPS-23
MPS-9
MPS-10
MVS-201
MVS-030AB

LED display can be reversed and installed in any directions!

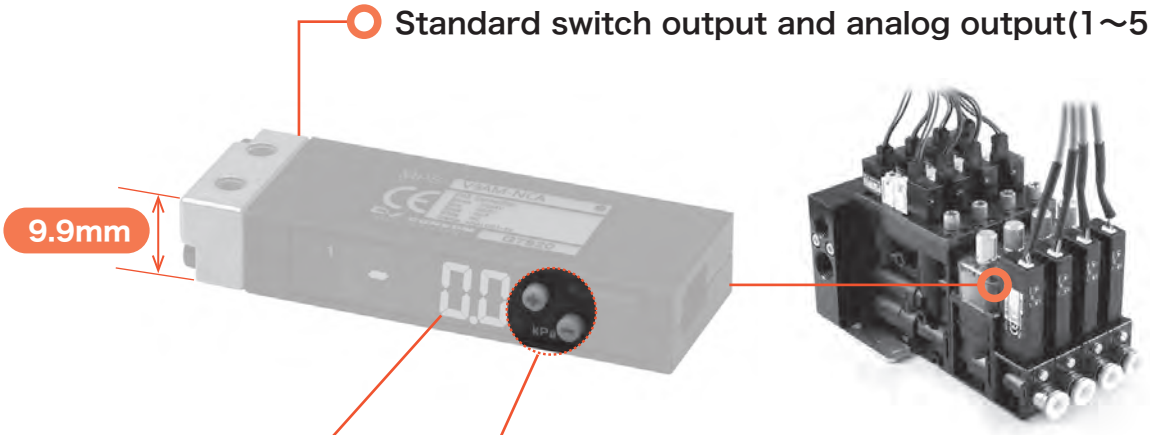

- Standard switch output and analog output(1～5 V)
- Can be mounted on our CONVUM
- Comfortable operation with the rubber button
- LED display can be reversed

  Display does not turn upside down in spite of the body upside down.

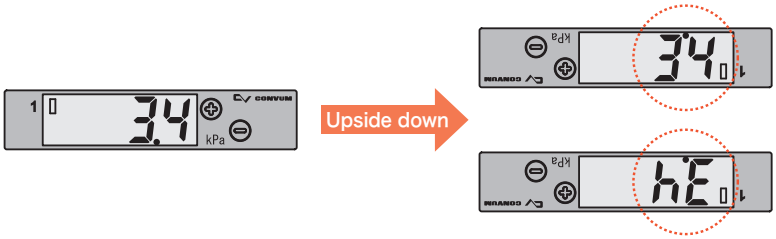

How to Order

• Single Type

MPS — V 9A M — N C A

① ② ③

Analog output
1 ～ 5V Voltage output

Cable
Connector type

① Pressure Range [kPa]

Symbol	Type	Range
V	Vacuum	-101.3～0
C	Compound	-100～100
R	Compound	-101～500

② Port Size

Symbol	Specifications
M	M5
C	for CONVUM

③ Output Type (Switch output)

Symbol	Specifications
N	NPN open collector
P	PNP open collector

• CONVUM Mounting Type

MPS — V 9 P — SC1

① ②

Pressure Range
Vacuum : -101.3 ～ 0kPa

① Output Type(Switch output)

Symbol	Specifications
Nil	NPN open collector Note1
N	NPN open collector Note2
P	PNP open collector

Note 1) In the case of SCl, SC2 selected in ②.
2) In the case of SC3 selected in ②.

② Applicable CONVUM

Symbol	Applicable CONVUM
SC1	SC1
SC2	SC2
SC3	SC3

Option Parts

• Bracket Fitting

MPS — ACCK6
(L9A and L9B)

• Connector Cable for Power / Control Input or Output

MPS — 10CC

L9 Bracket Fitting Installation

Prepare M3 screws for mounting.
For mounting N pieces :
length of M3 screw = N × 10 + (4 ～ 6) mm

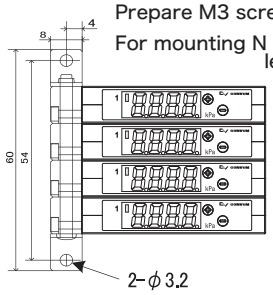

● L 9 A bracket fitting

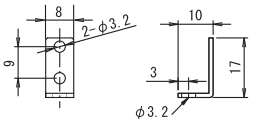

● L 9 B bracket fitting

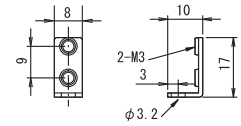

MPS-9 Slim Type Digital Display Pressure Sensor

Specifications

Description ＼ Model number		Unit	MPS-V9	MPS-C9	MPS-R9
Fluid			Air, non-corrosive gas, non-flammable gas		
Diaphragm			Silicon diaphragm		
Rated pressure range		kPa	-101.3～0	-100～100	-101～500
Setting pressure range		kPa	-101.3～10	-101～101	-101～500
Withstand pressure		MPa	0.3		0.8
Ambient temperature range		℃	0～50(No freezing)		
Ambient humidity range		%RH	35～85(No condensation)		
Power supply voltage		V	DC12～24±10%, ripple(Vp-p) 5% or less		
Maximum power consumption		mA	40		
Switch output	Type		NPN or PNP open collector 1 output		
	Maximum load current	mA	125		
Analog output			DC1～5V(±0.1) linearity 1.0% F.S.		
Repeatability		%	±0.2F.S 1digit or less		
Temperature characteristic		%	Less than±2 F.S. (At standard temperature 25℃, range0～50℃)		
Response time		ms	1.5 or less		
Hysteresis			Variable		
Display	Digital		4-digits, 7-segment red LED		
	Operation		OUT:Red LED(ON lighting)		
Display/set resolution		kPa	0.1		1
IP class			IP40		
Vibration resistance			10～55Hz, total amplitude 1.5mm, 50m/s^2 2 hours each direction of XYZ		
Shock resistance		m/s^2	980 3 times each direction of XYZ		
Electrical connection			Maker:JST Model:GHR-05V-S		
Cable			5 lead wires, 24AWG, UL AWM 20276, 1000mm Note1		
Connector			Maker:JST Model:GHR-05V-S		-
Weight	Without cable	g	15		
	With cable		32		

Note1)The white wire in cable of MPS-9 is not connected.

Internal Circuit

NPN Output (Analog voltage output)

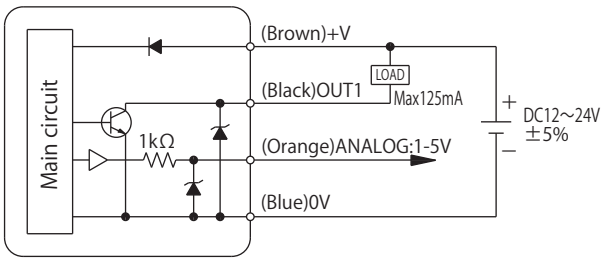

PNP Output (Analog voltage output)

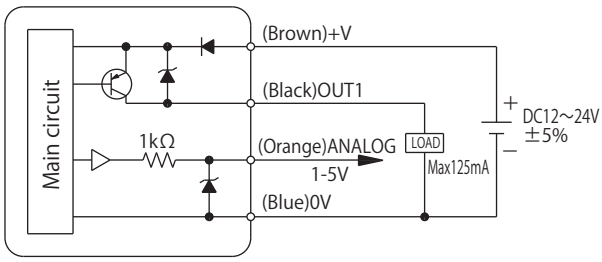

Display Description

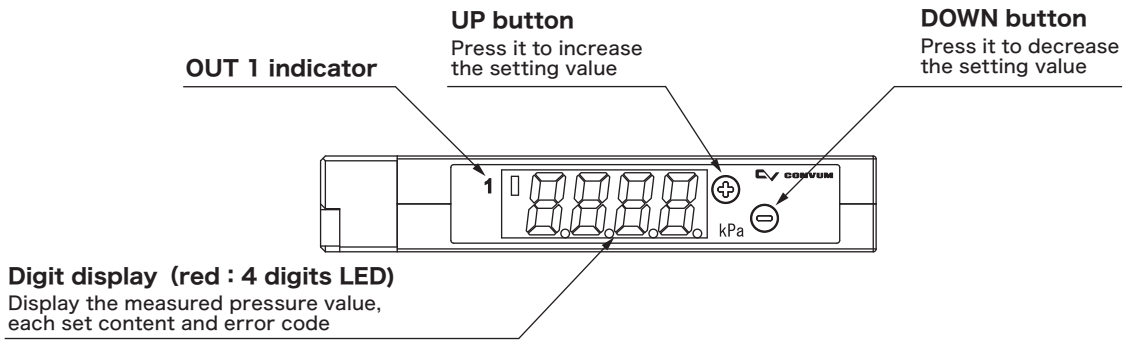

Setting・Function

※ Please refer to the instruction manuals for details.

OUT1 SETTING

Press ⊕ button once.

-1-

Wait 3 sec.

H-1 ⇄ -46.0 Set H-1 value which hysteresis turns on by ⊕⊖ button.

Alternately displayed

Press ⊕⊖ button at the same time

h-1 ⇄ -7.0 Set a hysteresis range (h-1) by ⊕⊖ button.

Alternately displayed

Press ⊕⊖ button at the same time.

End

DISPLAY REVERSE SETTING

Press ⊕ button twice.

-2-

Wait 3 sec.

rot ⇄ oFF on Switch the display reverse function ON/OFF by ⊕ and ⊖ button

Alternately displayed

rot Press ⊕⊖ button at the same time

End

Feature Description

Display reverse function is set to ON, the display will be reversed. Please note that the decimal point is displayed above in this case.

POWER-SAVE SETTING

Press ⊕ button three times.

-3-

Wait 3 sec.

ECo ⇄ oFF on1 on2

Alternately displayed

Standard

End

Switch the power save mode ON1/ON2/OFF by ⊕ and ⊖ button.

Feature Description

★ No operation for 30 seconds in the measurement mode, it switches to power saving mode.

★ Set to ON1, the display turns dark after 30 seconds.

★ Set to ON2, the display turns off except decimal point after 30 seconds and only the decimal point is blinking.

● Set to ON1

No button operation for 30 sec, it switches to power saving mode 1.

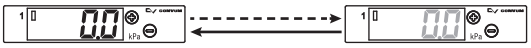

● Set to ON2

No button operation for 30 sec, it switches to power saving mode 2.

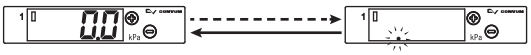

Setting · Function

※ Please refer to the instruction manuals for details.

ZERO POINT SETTING

Press ⊖ button for more than 3 sec.

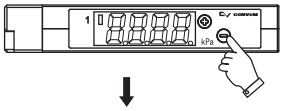

- - - - 3 sec.

00 ※ Zero resetting is possible only with an atmospheric pressure equivalent to ± 3% or less of F.S.

SECURITY LOCK SETTING

Press ⊕ and ⊖ button for more than 3 sec.

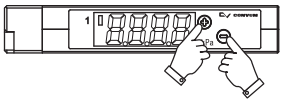

LoC **Locked**

(A function for locking keys to protect setting values. Key setting cannot be used afterwards.)

※ Unlock Method

Press ⊕ and ⊖ button for more than 3 sec again, then UnC displays and it is unlocked.

ERROR CODE INSTRUCTION

Error type	Error code	Error condition	Trouble shooting
OUT1 excess load current error	CE1	Load current is more than 125 mA.	Turn power off and check the cause of overload current or lower the current load under 125 mA, then restart.
Zero reset error	Err	During zero reset, input pressure is over ±3% F.S. of ambient pressure.	Change input pressure to ambient pressure and perform zero reset again.
System error	Er1	Internal system error	Please contact us.

OTHER DISPLAY ITEMS

Type	Display	Condition
Rated range full	FFF	Pressure value surpassing the rated range.
Back pressure full scale	-FF	Pressure value surpassing the back pressure range.

Dimensions

(mm)

Single Type

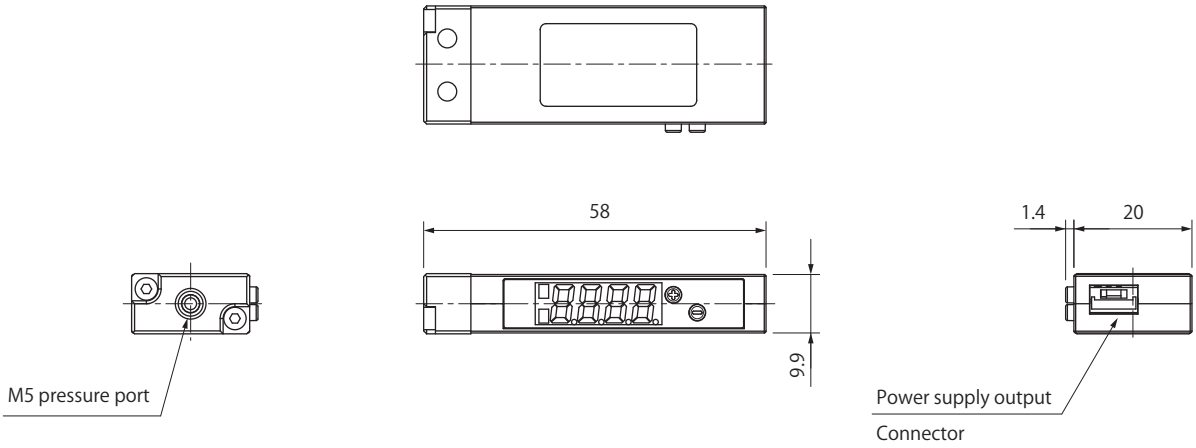

CONVUM Mounting Type

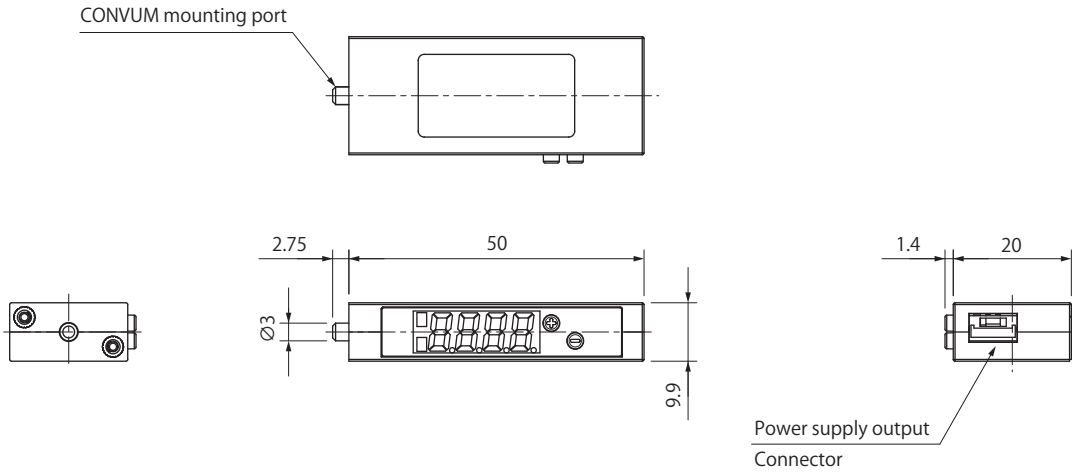

コネクタケーブル　MPS-10CC

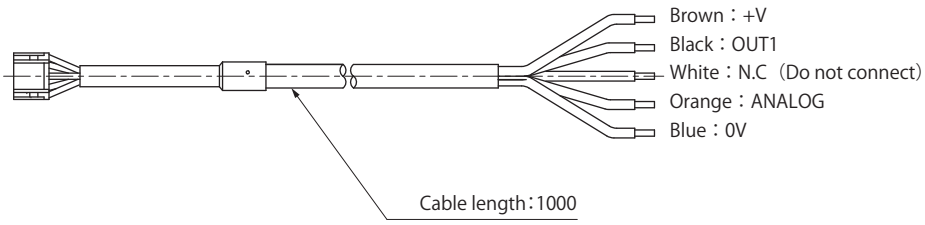

MPS-10 Series

Digital Display Pressure Sensor with Solenoid Valve Control

RoHS

Makes it possible to energy-saving by monitoring and controlling the pressure!

Energy-saving pressure sensor controls the solenoid valve mounted on CONVUM, and it controls the vacuum and blow-off in accordance with the setting pressure value. Energy-saving pressure sensor reduces the air consumption of CONVUM.

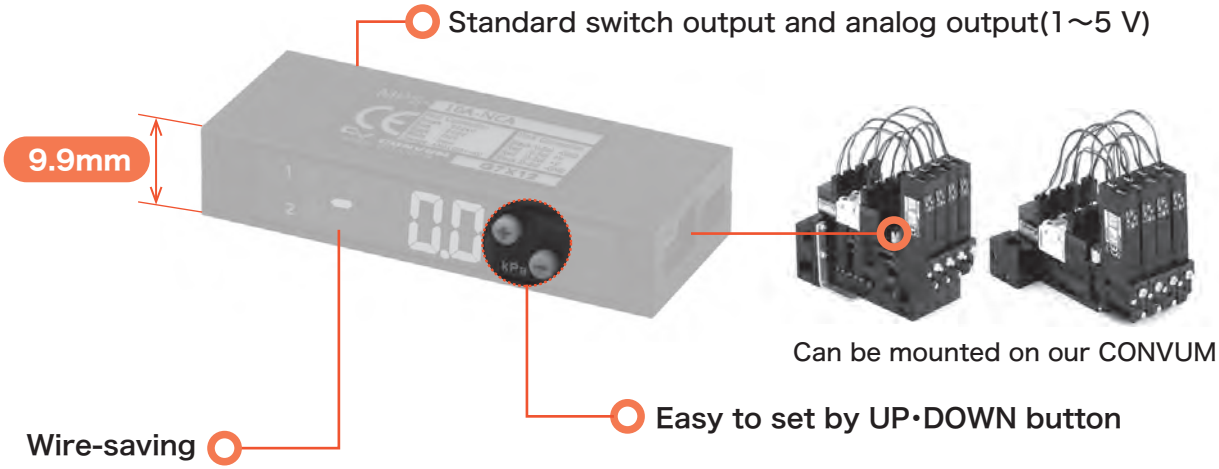

Wiring of I/O to PLC only need one four-core cable. Wiring of vacuum generation/blow-off solenoid valve is unnecessary. It could help on space-saving of the device, reducing the sequencer loading, lowering down the operation time of electrical wiring.

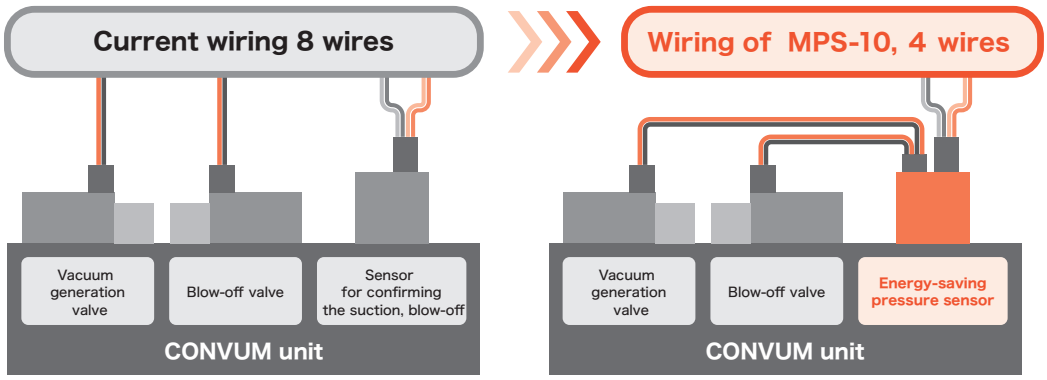

How to Order

• Single Type

MPS — 10A — N CA S
① ②

① Output Type(Switch output)

Symbol	Specifications
N	NPN open collector
P	PNP open collector

② Input Type

Symbol	Specifications
Blank	Sink input
S	Source input Note1

Note1) Only PNP (select P in ①).

• CONVUM Mounting Type

MPS — 10 P — SC — B
① ② ③

① Output Type(Switch output)

Symbol	Specifications	Applicable CONVUM
Blank	NPN open collector	SC1, SC2
N	NPN open collector	SC3
P	PNP open collector	SC1, SC2, SC3

② Applicable CONVUM

Symbol	Applicable CONVUM
SC	SC1, SC2
SC3	SC3

※ With valve connector cable and bracket.

③ Vacuum Generation Valve Type

Symbol	Type	Applicable CONVUM
A	Normally opened	SC3
B	Normally closed	SC1, SC2
S	Normally closed	SC3
W	Self-holding Note1	SC1, SC2, SC3

Note1) The energy-saving function of a sensor cannot work if the self-holding valve is selected.

Option Parts

• Connector Cable for Power / Control Input or Output

MPS — 10CC

• Bracket for Mounting to CONVUM

MPS — 10 — B

• Connection Connector Cable for Valve

MPS — 10 — VC — SC1 — W
① ②

① Applicable CONVUM

Symbol	Applicable CONVUM
SC1	SC1
SC2	SC2
SC3	SC3

② Vacuum Generation Valve Type

Symbol	Type
Blank	Normally opened, closed
W	Self-holding

Specifications

Description \ Model number		Unit	MPS-10
Fluid			Air, non-corrosive gas, non-flammable gas
Diaphragm			Silicon diaphragm
Rated pressure range		kPa	-101～500
Setting pressure range		kPa	-101～500
Withstand pressure		MPa	0.8
Ambient temperature range		℃	0～50(No freezing)
Ambient humidity range		%RH	35～85(No condensation)
Power supply voltage		V	DC24±10%, ripple(Vp-p) 5% or less
Maximum power consumption		mA	50 (not include the driven current for valve)
Switch output	Type		NPN or PNP open collector 1 output
	Maximum load current	mA	125
Analog output		V	DC1～5 (±0.1) linearity 1.0% F.S., output impedance1kΩ
Digital input(suction/blow off command)		V	Non-contact 1 input:0V or 24V(more than 1msec)
Repeatability		%	±0.3 F.S 1digit or less
Temperature characteristic		%	Less than±2 F.S (At standard temperature 25℃, range 0 ～ 50℃)
Response time		ms	1.5 or less
Hysteresis			Variable
Display	Digital		4-digits, 7-segment red LED
	Operation		Output ON/OFF:red color LED Vacuum generation valve ON/OFF:green color LED
Display/set resolution		kPa	1
Display time		s	0.2
Protection	Reverse-current protection		With
	Overvoltage protection		With
	Output short circuit protection		With
	IP class		IP40
Vibration resistance			10～55Hz, total amplitude 1.5mm, 50m/s^2 2 hours each direction of XYZ
Shock resistance		m/s^2	100 3 times each direction of XYZ
Electrical connection			Connector
Cable			5 lead wires, 24AWG, UL AWM 20276, 1000mm
Connector			Maker:JST Model:GHR-05V-S
Weight	Without cable	g	10
	With cable		32

Internal Circuit

NPN Output(sink input)

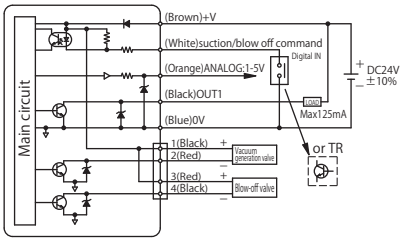

PNP Output(sink input)

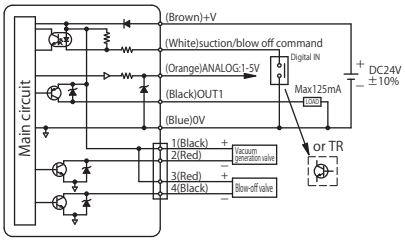

PNP Output(source input)

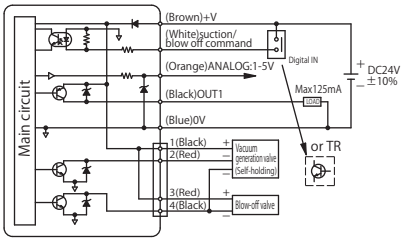

Display Description

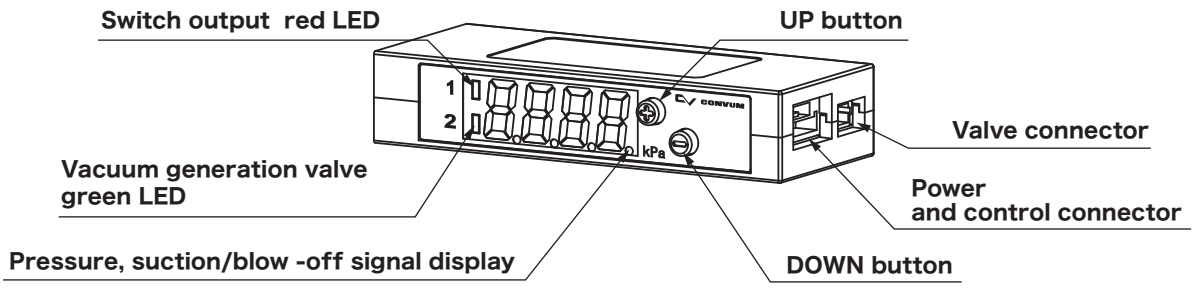

Setting・Function

※ Please refer to the instruction manuals for details.

SUCTION MODE AND TIMER SETTING

Press ⊕ once and wait for 3 seconds after having release it.

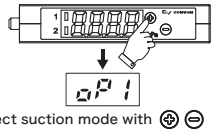

Select suction mode with ⊕ ⊖

Press ⊕ ⊖ at the same time.

bt ⇄ 2.00

Select a desired value for "bt" with ⊕ ⊖

Press ⊕ ⊖ at the same time.

t1 ⇄ 0.30

Select a desired value for "t1" with ⊕ ⊖

Press ⊕ ⊖ at the same time.

t2 ⇄ 0.00

Select a desired value for "t2" with ⊕ ⊖

Press ⊕ ⊖ at the same time.

End

Suction mode

oP1 : Suction mode 1 (ON by timer : suction maintained by the timer)

oP2 : Suction mode 2 (OFF by timer : vacuum solenoid valve OFF after expiration of timer)

※Self-holding type solenoid valve control, please use mode 2 adsorption.

oP3 : Suction mode 3 (ON : vacuum solenoid valve kept ON)

1. 「Blow-off time」bt

Set a time during which to keep the blow-off solenoid valve ON in response to the blow-off command signal. It can be set between 0.00 and 9.99 seconds. Beyond 9.99 seconds, "At" (automatic) is displayed. If "At" is set, Blow-off solenoid valve turns off synchronously with the activation (ON) of OUT1 at the time of blow-off. ("bt" is common to all suction modes.)

2. 「Delay time 1」t1

Set a delay time from the activation (ON) of OUT1 to the deactivation (OFF) of vacuum solenoid valve after vacuum has reached the set point during suction. This can be set between 0.00 to 9.99 seconds. ("t1" can be set when the suction mode is 1 or 2.)

3. 「Delay time 2」t2

Set a delay time from the detection of blow-off command signal to the activation (ON) of blow-off solenoid valve. It can be set between 0.00 to 9.99 seconds. ("t2" is common to all suction modes.)

ZERO RESETTING

Press and hold ⊖ for more than 3 sec.

※Zero resetting is possible only with an atmospheric pressure equivalent to ± 3% or less of F.S.

SECURITY LOCK SETTING AND RESETTING

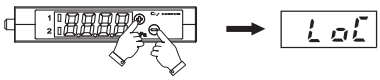

Press ⊕ and ⊖ at the same time for more than 3 sec.

※ Unlock method : press ⊕ and ⊖ at the same time again, then Unl displays and it is unlocked.

Security Lock mode can prevent operation mistakes.

ERROR CODE INSTRUCTION

Error type	Error code	Error condition	Trouble shooting
OUT1 excess load current error	CE1	Load current is more than 125 mA.	Turn power off and check the cause of overload current or lower the current load under 125 mA, then restart.
Zero reset error	Err	During zero reset, input pressure is over ±3% F.S. of ambient pressure.	Change input pressure to ambient pressure and perform zero reset again.
System error	Er1	Internal system error	Please contact us.

OTHER DISPLAY ITEMS

Type	Display	Condition
Rated range full	FFF	Pressure value surpassing the rated range.
Back pressure full scale	-FF	Pressure value surpassing the back pressure range.

Setting・Function

※ Please refer to the instruction manuals for details.

3 TYPES OF SUCTION MODE

CONVUM Energy-saving Mode (Suction Mode 1)

Digital input (suction demand signal) turns on the vacuum solenoid valve to generate vacuum so that suction can be started.
Upon reaching the assigned vacuum volume, vacuum solenoid valve turns off. Thereafter, when vacuum decreases below the assigned vacuum volume, vacuum solenoid valve will turns on again. Vacuum solenoid valve subsequently turns on/off repeatedly until digital input was turned off.
When digital signal was turned off, blow-off solenoid valve turns on and start to blow-off.
By monitoring vacuum pressure as described above, air consumption will be dramatically reduced because air supply is no longer required during the time when pressure was holding at the assigned pressure volume.

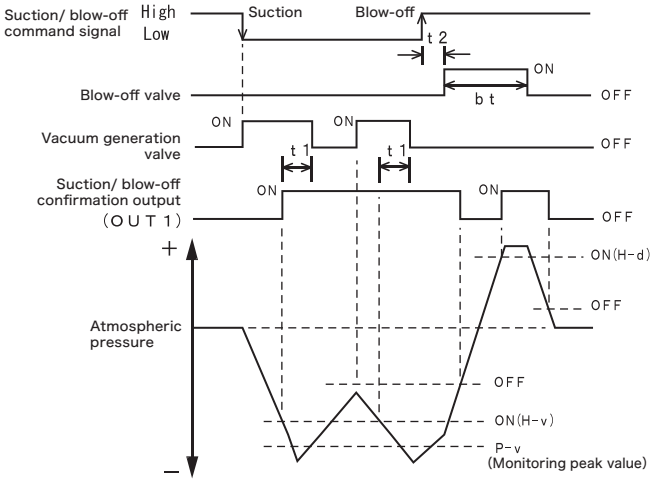

CONVUM Timer off Mode (Suction Mode 2)

Digital input (suction demand signal) turns on the vacuum solenoid valve to generate vacuum so that suction can be started.
Once OUT1 becomes ON upon reaching the assigned vacuum volume, vacuum solenoid valve turns off.
On this mode, the vacuum solenoid valve does not turn on again regardless of the value of vacuum pressure.
Digital signal turns off the vacuum solenoid valve, the blow-off solenoid valve turn on and start to blow-off.

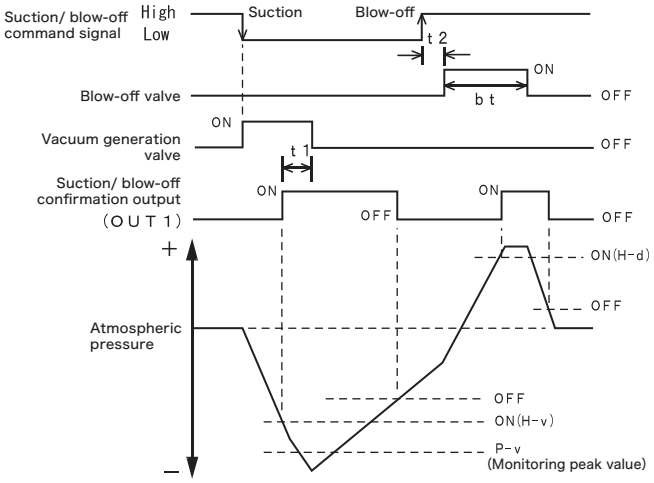

CONVUM Vacuum Valve Keeping ON Mode (Suction Mode 3)

Suction command signal turns on the vacuum solenoid valve to generate vacuum so that suction can be started.
Upon reaching the preset vacuum, OUT1 becomes ON.
Vacuum solenoid valve remains ON regardless of the value of vacuum pressure.
Digital signal turns off the vacuum solenoid valve, the blow-off solenoid valve turn and start to blow-off.

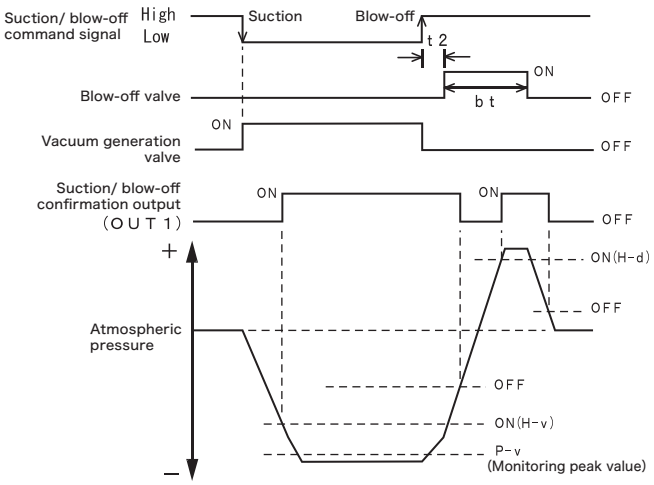

Dimensions

(mm)

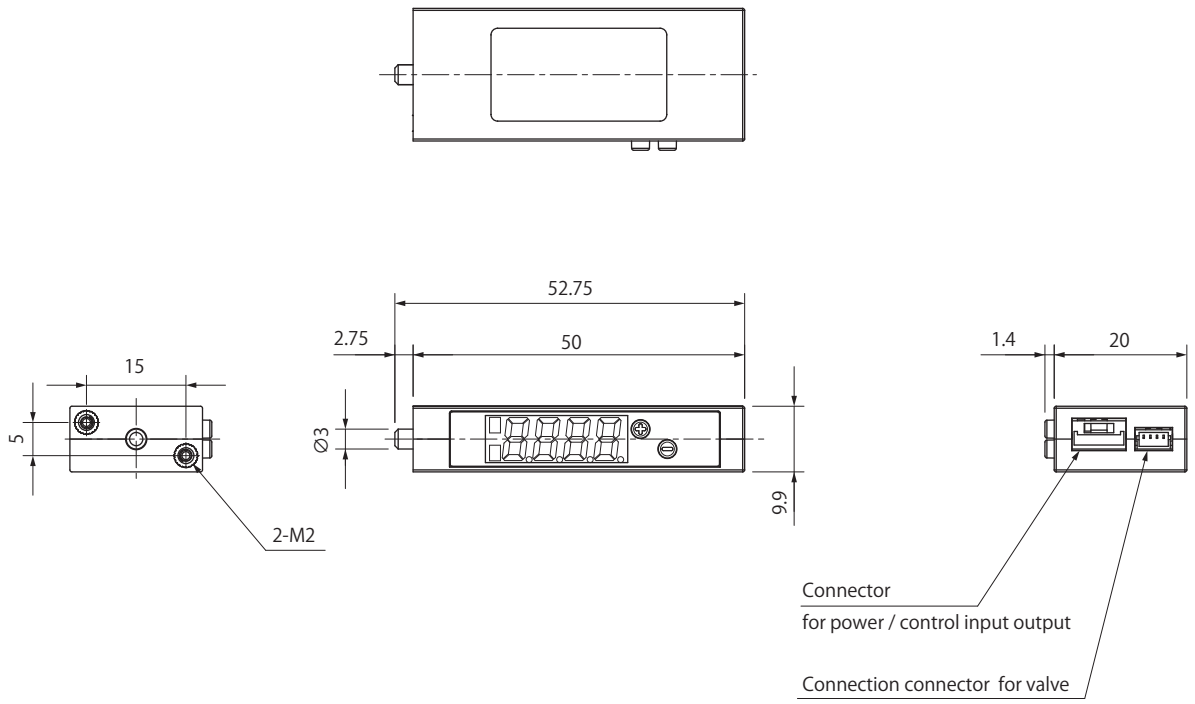

■Connector Cable (MPS-10CC)

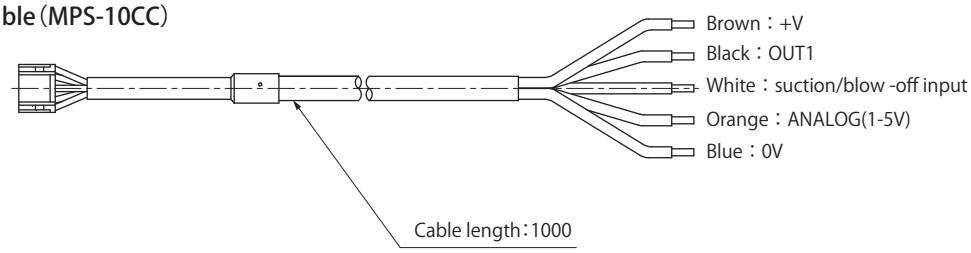

MVS-201 Series

Digital Display Pressure Sensor with Solenoid Valve Control

RoHS

Can be mounted on our CONVUM

Makes it possible to energy-saving by monitoring and controlling the pressure!

Energy-saving pressure sensor controls the solenoid valve mounted on CONVUM, and it controls the vacuum and blow-off in accordance with the setting pressure value. Energy-saving pressure sensor reduces the air consumption of CONVUM.

Air consumption **98%** reduced

【Condition】
CONVUM：
MC22S10HS type
Supply pressure：0.5MPa
Air consumption：55L/min
Tube：ϕ4x2.5 Length 800mm

Example

Energy-saving function: before	Energy-saving function: after
Air consumption of MC22S10HS 55L/min	
Vacuum generation from 0kPa～-86.6kPa	
CONVUM staying ON during workpieces adsorption.	Upon reaching -86.6kPa, the check valve keeps vacuum pressure retained and CONVUM will turned off.
Vacuum generation time: 5 sec/1 tact	Vacuum generation time: 0.1 sec/1 tact (Setting vacuum pressure reach time)
Air consumption in 1 tact time 4.58L/min 55L/minX(5/60)=4.58L/min	Air consumption in 1 tact time 0.091L/min 55L/minX(0.1/60)=0.091/min
Air consumption 98% reduced. From 4.58L/min to 0.091L/min.	

Wire-saving

Wiring of I/O to PLC only need one four-core cable.
Wiring of vacuum generation/breaking solenoid valve is unnecessary.
It could help on space-saving of the device, reducing the sequencer loading, lowering down the operation time of electrical wiring.

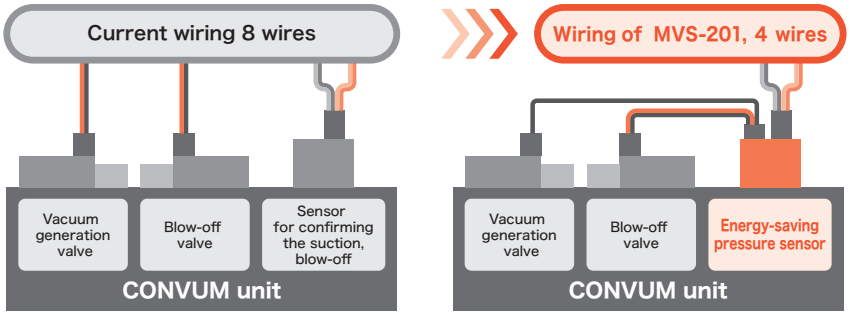

Full warning function

Monitoring suction/blow-off reach time, warning code is displayed intermittently.
The problem can found immediately, even manifold type.

Suction reach time over Flash

Blow-off reach time over Flash

Peak value decrease Flash

※ Warning code display time can be set between 0 (OFF) and 9.99 seconds.
They can also be cleared by pressing any button.

How to Order

• Single Type

MVS — 201 — N C

① Output Type(Switch output)

Symbol	Specifications
N	NPN open collector
P	PNP open collector

Cable
M8(4P)plug (Connector with 2m lead wire)

• CONVUM Mounting Type

MVS — 201 P — MC22 — B

① Output Type(Switch output)

Symbol	Specifications
Blank	NPN open collector
P	PNP open collector

② Applicable CONVUM

Symbol	Applicable CONVUM
MC22	MC22
MC72	MC72
MPV3	MPV3

③ Vacuum Generation Valve Type

Symbol	Type
A	Normally opened
B	Normally closed
W	Self-holding Note1

Note1) The energy-saving function of a sensor cannot work if the self-holding valve is selected.

Option Parts

• Connector Cable for Sensor and Valve

MPS — ACCL8

Specifications

Description ＼ Model number		Unit	MVS-201
Fluid			Air, non-corrosive gas, non-flammable gas
Diaphragm			Silicon diaphragm
Rated pressure range		kPa	-101 ～ 500
Setting pressure range		kPa	-101 ～ 500
Withstand pressure		MPa	0.8
Ambient temperature range		℃	0 ～ 50 (No freezing)
Ambient humidity range		%RH	35 ～ 85 (No condensation)
Power supply voltage		V	DC24±10% , Ripple (Vp-p) 5% or less Note1
Maximum power consumption		mA	45 (not include the driven current for valve)
Switch output	Type		NPN or PNP open collector 1 output
	Maximum load current	mA	125
Digital input (suction/blow off command)		V	Non-contact 1 input (more than 1msec)
Repeatability		%	±0.3 F.S 1digit or less
Temperature characteristic		%	Less than±2 F.S (At standard temperature 25℃ , range0 ～ 50℃)
Response time		ms	2.5 or less
Hysteresis			Variable
Display	Digital		3-digits, 7-segment red LED
	Operation		Output ON/OFF : red color LED, Vacuum generation valve ON/OFF : green color LED
Display/set resolution		kPa	1
Display time		s	0.2
IP class			IP40
Vibration resistance			10 ～ 150Hz, total amplitude 1.5 mm , 50 m / s^2 2 hours each direction of XYZ
Shock resistance		m/s^2	100 3 times each direction of XYZ
Electrical connection			M8 Connector
Cable			ϕ 4 0.3mm^2 4 lead wires 2m
Weight	Without cable	g	20
	With cable		77

Note1) It must be consistent with the solenoid valve drive voltage.

Internal Circuit

NPN Output

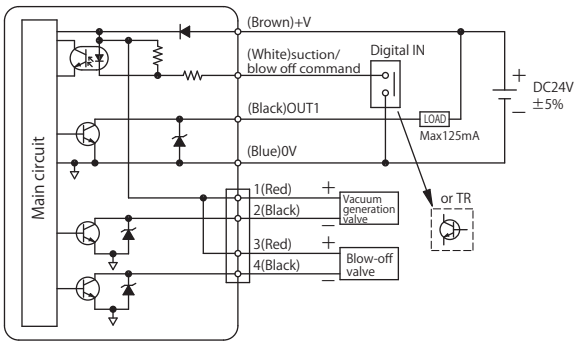

PNP Output

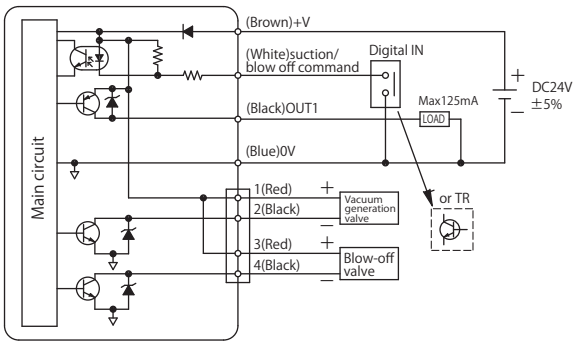

Display Description

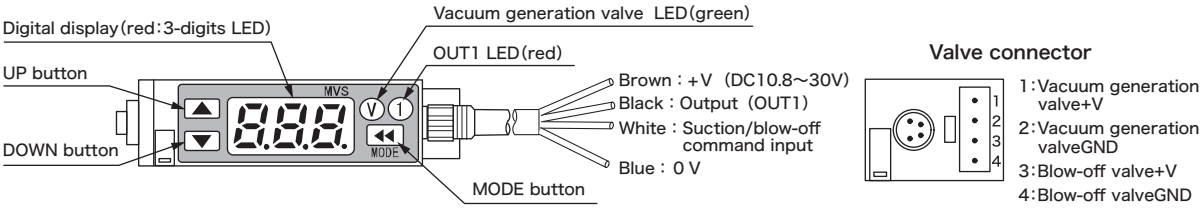

Setting・Function

※ Please refer to the instruction manuals for details.

SUCTION MODE AND TIMER SETTING

Press ◀◀ once and wait for 3 seconds after having release it.

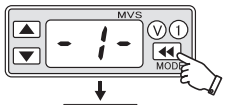

oP1

Select suction mode with ▼ ▲
set it with ◀◀

bt ⇄ 2.00

Select a desired value for "bt" with ▼ ▲
set it with ◀◀

t1 ⇄ 0.30

Select a desired value for "t1" with ▼ ▲
set it with ◀◀

t2 ⇄ 0.00

Select a desired value for "t2" with ▼ ▲
set it with ◀◀

End

Suction mode

oP1 : Suction mode 1 (ON by timer : suction maintained by the timer)
oP2 : Suction mode 2 (OFF by timer : vacuum solenoid valve OFF after expiration of timer)
oP3 : Suction mode 3 (ON : vacuum solenoid valve kept ON)

1. 「Blow-off time」bt

Set a time during which to keep the blow-off solenoid valve ON in response to the blow-off command signal. It can be set between 0.00 and 9.99 seconds. Beyond 9.99 seconds, "At" (automatic) is displayed. If "At" is set, Blow-off solenoid valve turns off synchronously with the activation (ON) of OUT1 at the time of blow-off. ("bt" is common to all suction modes.)

2. 「Delay time 1」t1

Set a delay time from the activation (ON) of OUT1 to the deactivation (OFF) of vacuum solenoid valve after vacuum has reached the set point during suction.
This can be set between 0.00 to 9.99 seconds. ("t1" can be set when the suction mode is 1 or 2.)

3. 「Delay time 2」t2

Set a delay time from the detection of blow-off command signal to the activation (ON) of blow-off solenoid valve. It can be set between 0.00 to 9.99 seconds. ("t2" is common to all suction modes.)

ZERO RESETTING

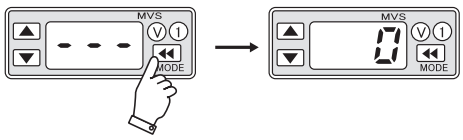

Press and hold ◀◀ for more than 3 sec.

※Zero resetting is possible only with an atmospheric pressure equivalent to ± 3% or less of F.S.

SECURITY LOCK SETTING AND RESETTING

Press the ▼ while the ◀◀ is pressed

LoC is displayed to inhibit further button operation.

To reset it, press the ▼ while the ◀◀ is pressed

UnC is displayed to release the security lock.

ERROR CODE INSTRUCTION

Error type	Error code	Error condition	Trouble shooting
OUT1 excess load current error	CE1	Load current is more than 125 mA.	Turn power off and check the cause of overload current or lower the current load under 125 mA, then restart.
Zero reset error	Err	During zero reset, input pressure is over ±3% F.S. of ambient pressure.	Change input pressure to ambient pressure and perform zero reset again.
System error	Er1	Internal system error	Please contact us.

OTHER DISPLAY ITEMS

Type	Display	Condition
Rated range full	FFF	Pressure value surpassing the rated range.
Back pressure full scale	-FF	Pressure value surpassing the back pressure range.

Setting・Function

※ Please refer to the instruction manuals for details.

3 TYPES OF SUCTION MODE

CONVUM Energy-saving Mode (Suction Mode 1)

Digital input (suction demand signal) turns on the vacuum solenoid valve to generate vacuum so that suction can be started.
Upon reaching the assigned vacuum volume, vacuum solenoid valve turns off. Thereafter, when vacuum decreases below the assigned vacuum volume, vacuum solenoid valve will turns on again. Vacuum solenoid valve subsequently turns on/off repeatedly until digital input was turned off.
When digital signal was turned off, blow-off solenoid valve turns on and start to blow-off.
By monitoring vacuum pressure as described above, air consumption will be dramatically reduced because air supply is no longer required during the time when pressure was holding at the assigned pressure volume.

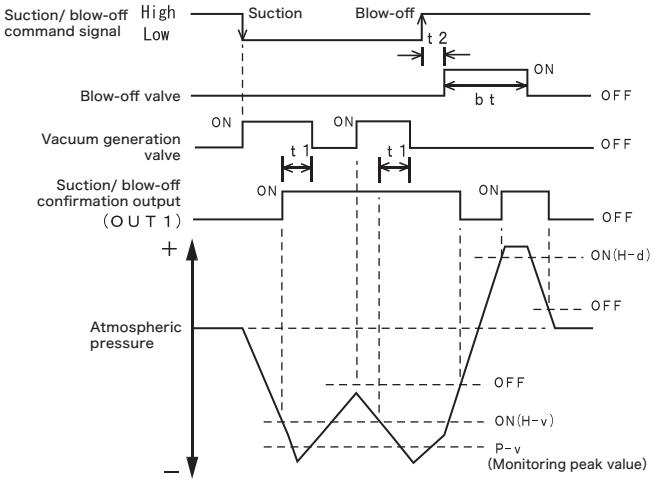

CONVUM Timer off Mode (Suction Mode 2)

Digital input (suction demand signal) turns on the vacuum solenoid valve to generate vacuum so that suction can be started.
Once OUT1 becomes ON upon reaching the assigned vacuum volume, vacuum solenoid valve turns off.
On this mode, the vacuum solenoid valve does not turn on again regardless of the value of vacuum pressure.
Digital signal turns off the vacuum solenoid valve, the blow-off solenoid valve turn on and start to blow-off.

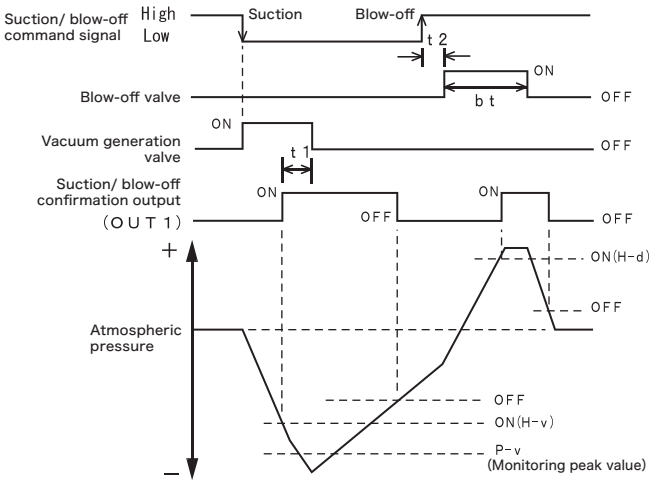

CONVUM Vacuum Valve Keeping ON Mode (Suction Mode 3)

Suction command signal turns on the vacuum solenoid valve to generate vacuum so that suction can be started.
Upon reaching the preset vacuum, OUT1 becomes ON. Vacuum solenoid valve remains ON regardless of the value of vacuum pressure.
Digital signal turns off the vacuum solenoid valve, the blow-off solenoid valve turn and start to blow-off.

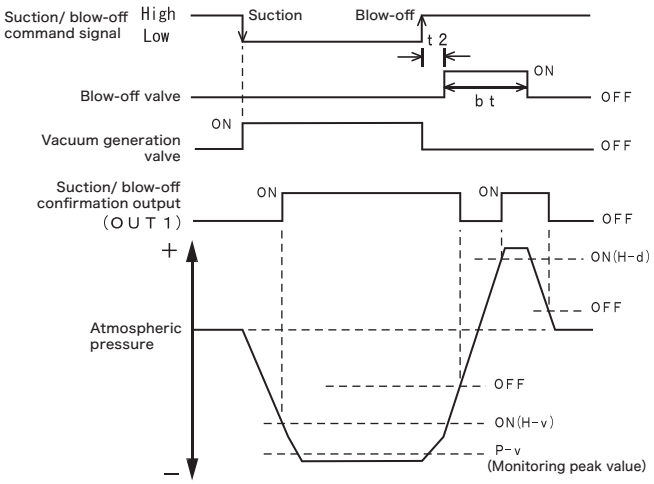

Dimensions

(mm)

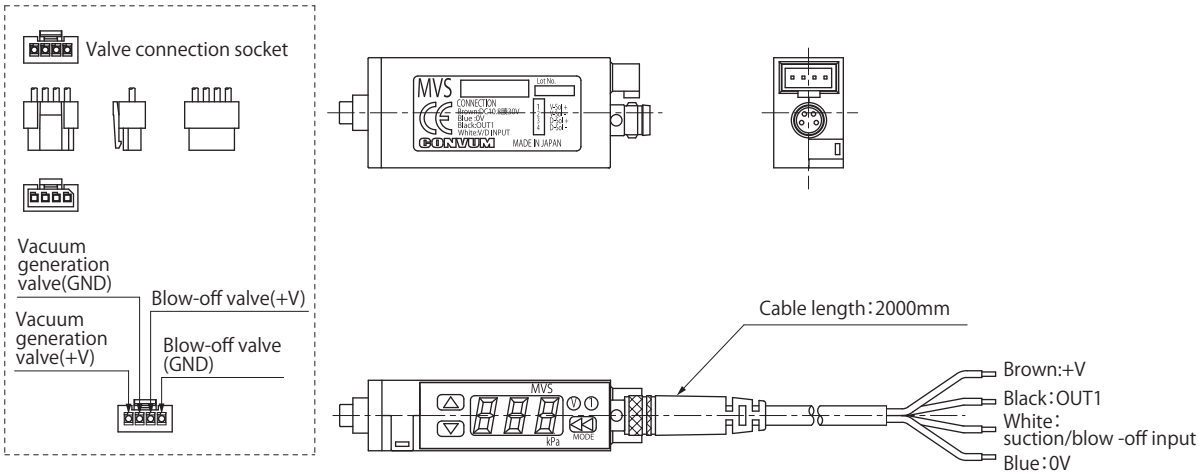

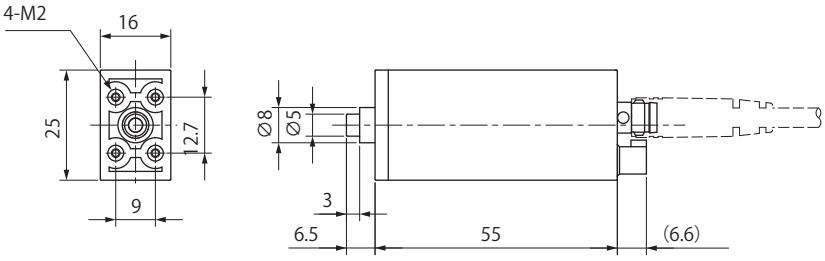

MVS-030AB Series

Electronic Pressure Sensor

RoHS

Small size,high-accuracy vacuum pressure sensor!

- High-speed response time : **2msec**
- Setting pressure range : **-101.2 ~ -2.7kPa**
- **Can be mounted on our CONVUM**
  Easy to replace the sensor.

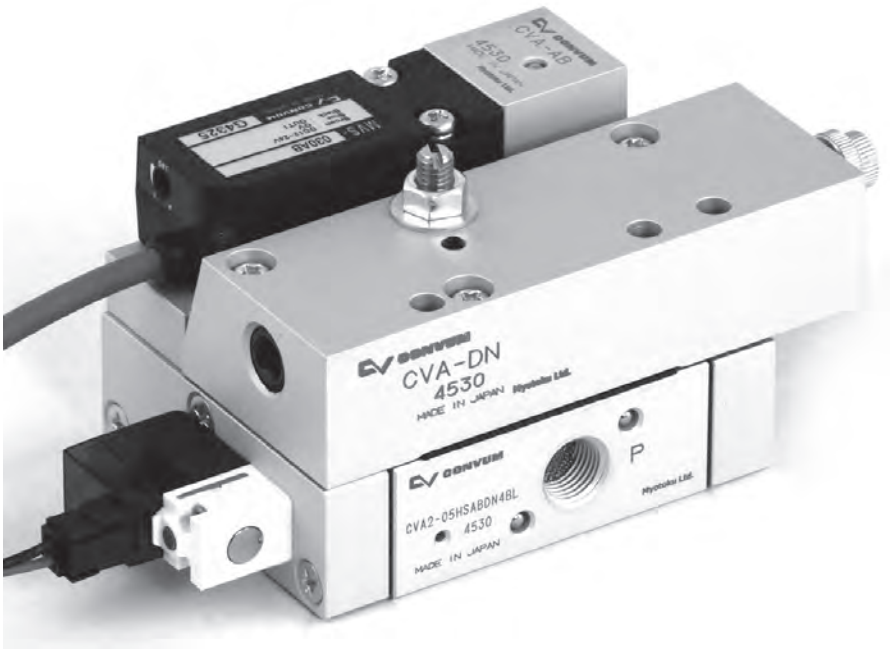

How to Order

・Single Type

MVS — 030AB — R
①

① Port Size

Symbol	Specifications
R	R1/8
NPT	NPT1/8
G	G1/8

※ Please consult with us for PNP output type.

・CONVUM Mounting Type

MVS — 030AB — MC22
①

① Applicable CONVUM

Symbol	Applicable CONVUM
MC22	MC22
CVA	CVA2
MC72	MC72
MPV3	MPV3

Specifications

Description ＼ Model number		Unit	MVS-030AB
Fluid			Air, non-corrosive gas, non-flammable gas
Diaphragm			Silicon diaphragm
Rated pressure range		kPa	-101～0
Setting pressure range		kPa	-101.2～-2.7
Setting value before shipment		kPa	-46.6
Withstand pressure		MPa	0.5
Ambient temperature range		℃	0～50 (No freezing)
Ambient humidity range		%RH	35～85 (No condensation)
No condensation		V	DC12～24±10%, ripple(Vp-p) 10% or less
Maximum power consumption		mA	20
Switch output	Type		NPN open collector 1 output
	Maximum load current	mA	DC30V 80mA
Repeatability		%	±3F.S
Response time		msec	2 or less
Hysteresis			5% of setting value
Display			Red LED
IP class			IP40
Noise resistance			Vp-p240V, 10ms, 0.5μs (by noise simulator)
Setting method			2/3 turn trimmer
Electrical connection			Grommet
Cable			φ4 3 lead wires X0.15mm 2m
Weight (With cable)		g	64

Internal Circuit

NPN Output

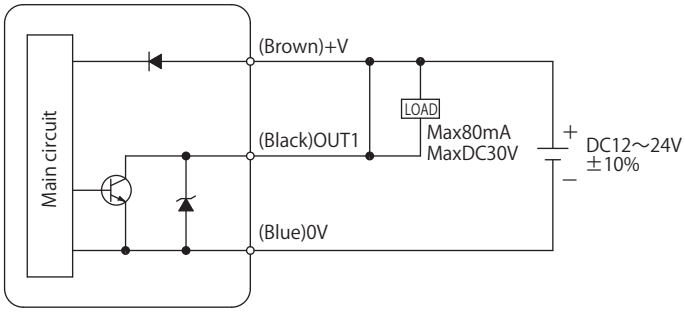

Dimensions

(mm)

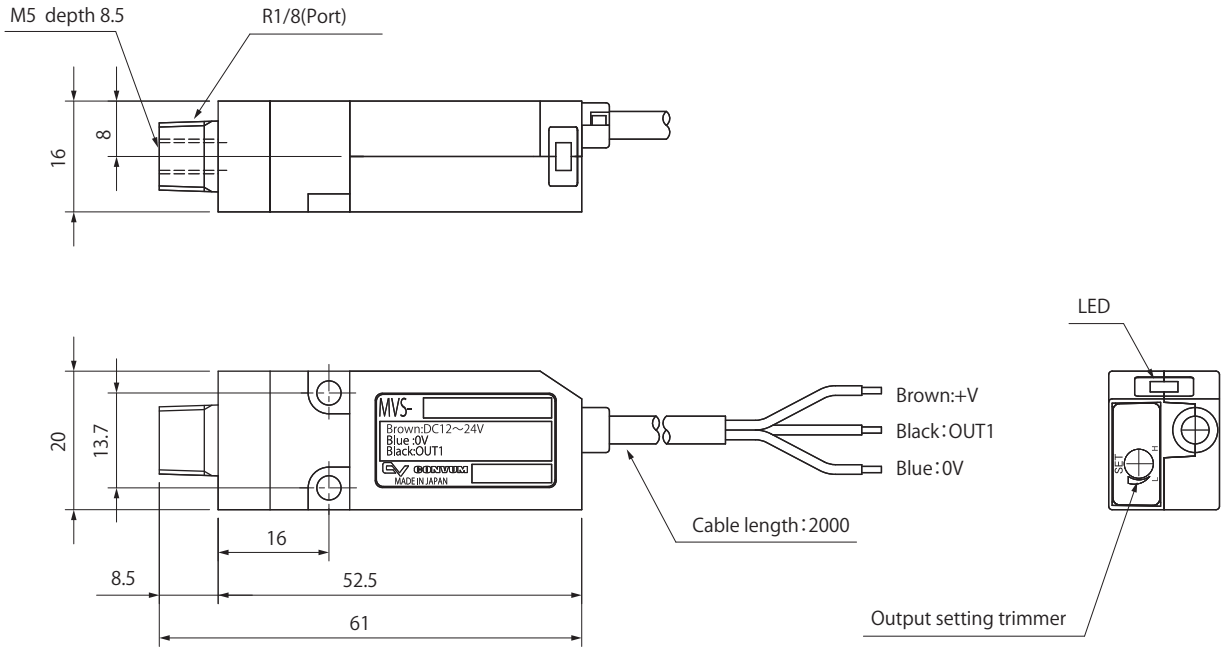

Mounting Method on CONVUM

For CVA2 CONVUM

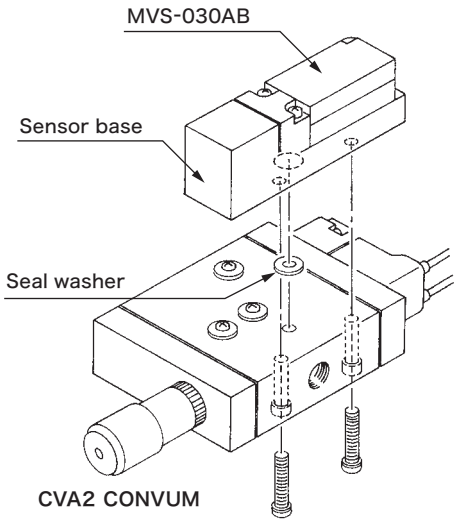

Screw (2-M3×25)
Standard screwing torque 0.59N·m

For MC22 CONVUM

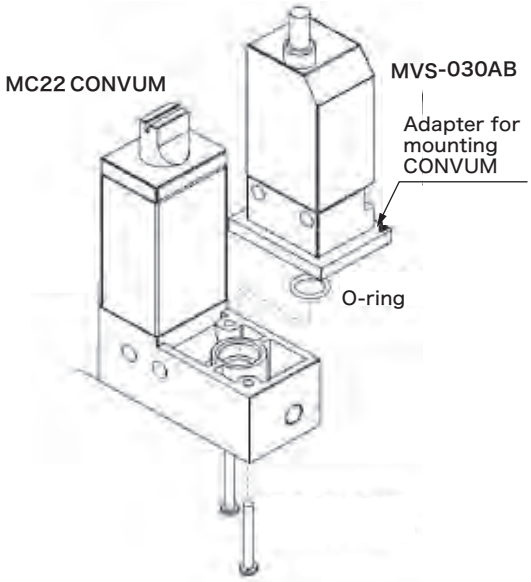

Screw (2-M2×16)
Standard screwing torque 0.07N・m

For MC72 CONVUM/ MPV3 Vacuum Switching Valve

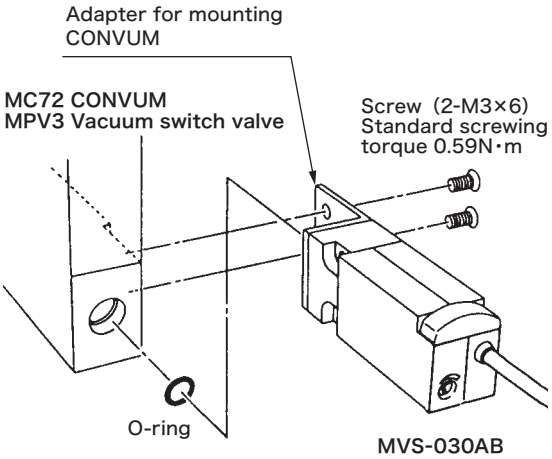

NO-CONTACT TRANSFER EQUIPMENTS

Non-contact Cup COP series P.585

Slim Type Non-contact Cup COPS series P.591

COP Series

Non-contact Cup

RoHS

Carries workpieces without contacting with them according to Bernoulli's theorem!

Carries workpieces without giving adsorption traces or damages to them.

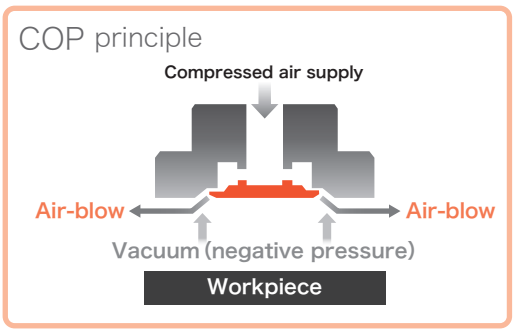

Adsorbing bumpy workpiece

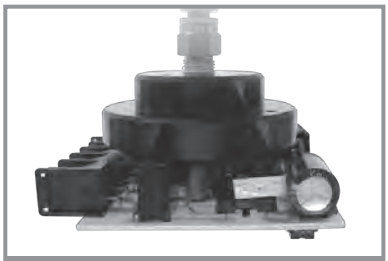

Board with mounted parts

Chemical

Adsorbing porous workpiece

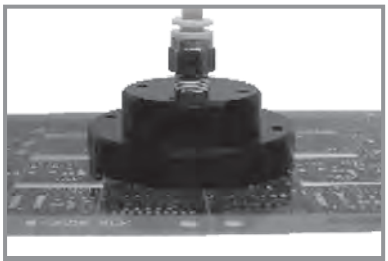

Printed circuit board

Frozen croquette (SUS type)

Adsorbs workpiece that cannot be adsorbed with adsorbing cups due to air leak.

※Contacts with a workpiece partly while adsorbing it, since the workpiece is bumpy.

Adsorbs various foods, making use of COP'S characteristics.

The body made of stainless steel (SUS) can be washed and always kept clean.
Adsorbs workpiece while removing water from their surface owing to the adsorption characteristics of COP.

Deep-fried bean curd (SUS type)

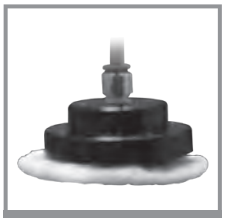
Baked sweets

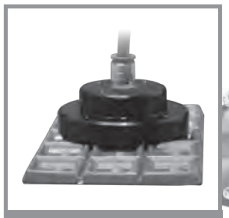
Chocolate

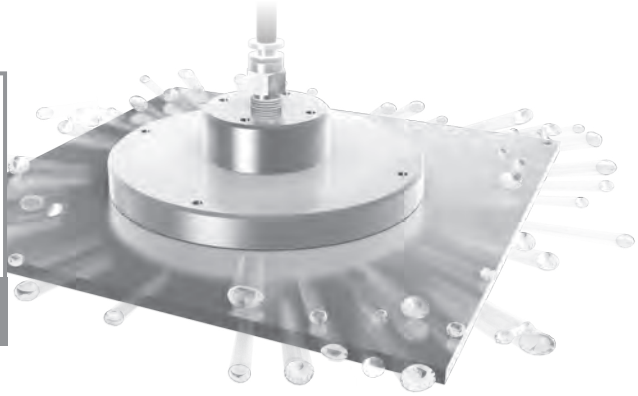

※Please consult with us for SUS body type.

Capable of high-speed carrying of non-adsorbable workpiece.

Carries workpiece without making adsorption traces.

Thin film | Aluminum | Paper

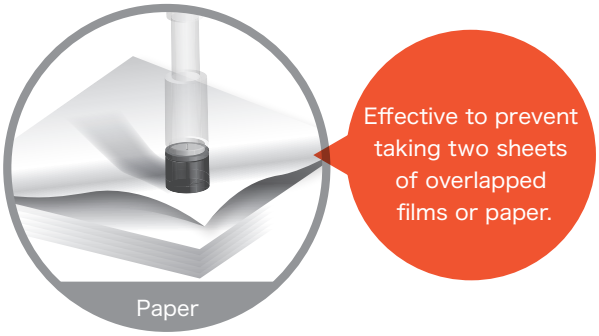

Optional attachment realizes the high-performance!

Anti-sliding damper

Can contact a workpiece partly if an anti-sliding damper is stuck and accordingly carry it without sliding.

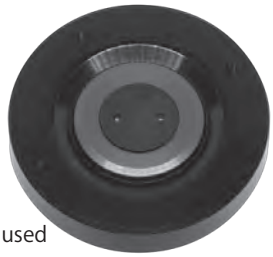
Anti-sliding damper is used

Work-holding guides

Has threads at 4 position on the top of the body.
Work-holding guides can be attached.

Work-holding guides are used

COP Non-contact Cup

How to Order

COP — 20
①

① Cup O.D. (mm)

Symbol	Cup O.D.
20	ϕ20
40	ϕ40
60	ϕ60
80	ϕ80
100	ϕ100

Option Parts

・Anti-sliding damper

COP — 20 G
①

① Applicable Cup

Symbol	Applicable Cup
20	COP-20
40	COP-40
60	COP-60
80	COP-80
100	COP-100

※ When using COP with damper, there will be contact between the cup and the workpiece.

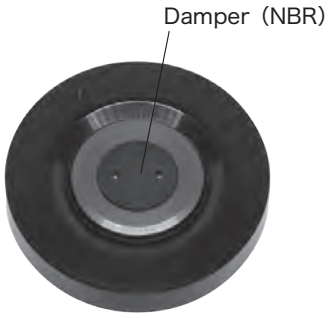

Specifications

Description ＼ Model number	Unit	COP-20	COP-40	COP-60	COP-80	COP-100
Fluid		Air, Non-corrosive gas, Non-flammable gas				
Port size		M5	Rc1/8		Rc1/4	
Operating pressure range	MPa	0.15～0.5				
Operating temperature range	℃	0～60(No freezing)				
Lifting force	N	1.3	5.1	8.5	24.5	39.2
Air consumption	L/min(ANR)	79	114	133	242	
Weight	g	13.5	59	102	171	230

※Lifting force and air consumption values in above table are effective when air supply pressure is set at 0.5 MPa and in the case of flat item suction.

Construction

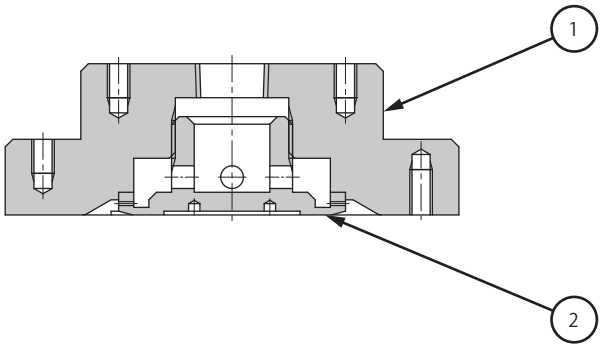

Component Parts

No.	Parts name	Material
1	Body	Aluminum
2	Nozzle	Aluminum

Performance Charts

(mm)

COP-20

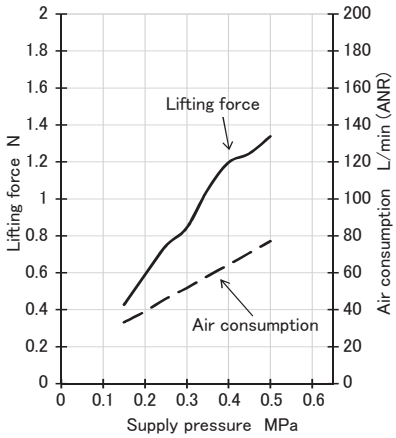

COP-40

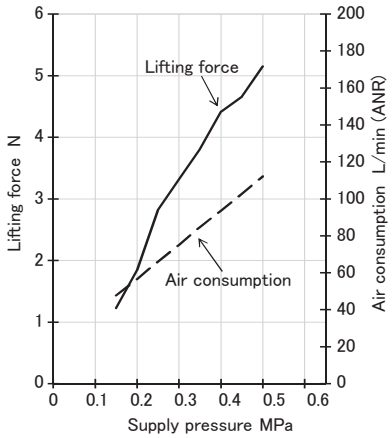

COP-60

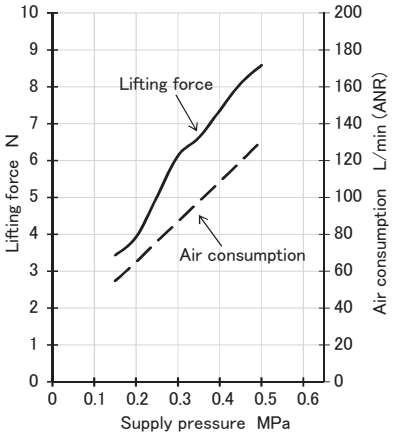

COP-80

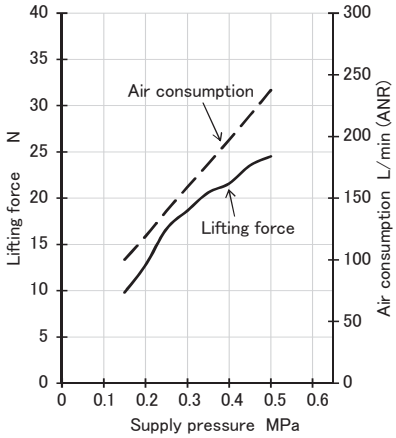

COP-100

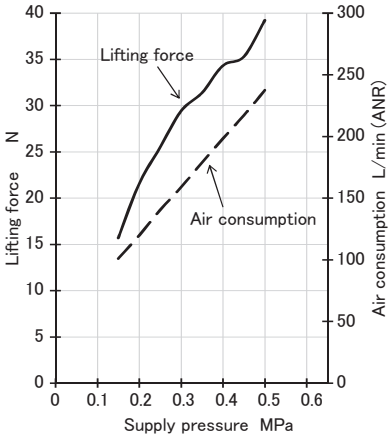

Dimensions (Body)

(mm)

COP-20

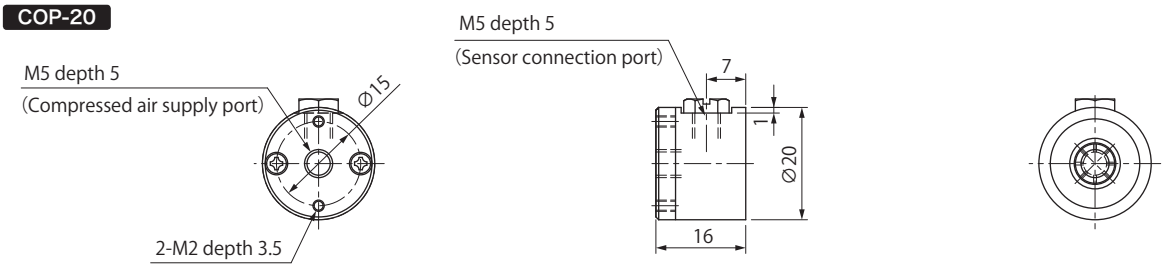

COP-40

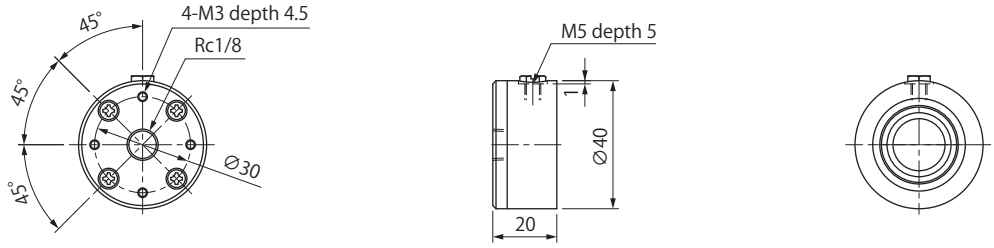

COP-60

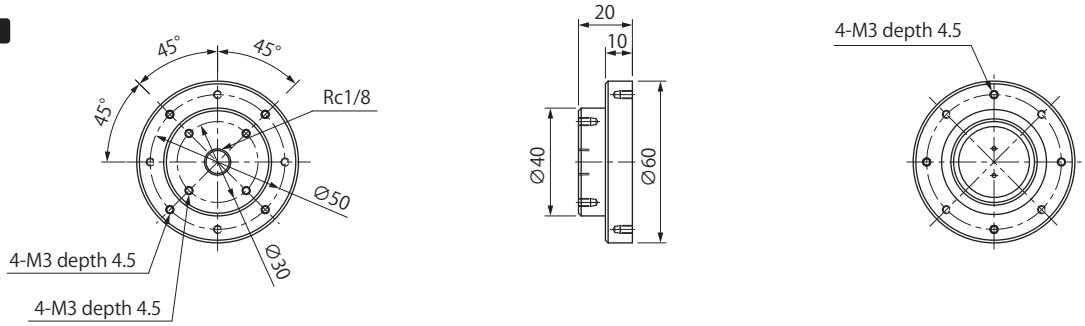

COP-80

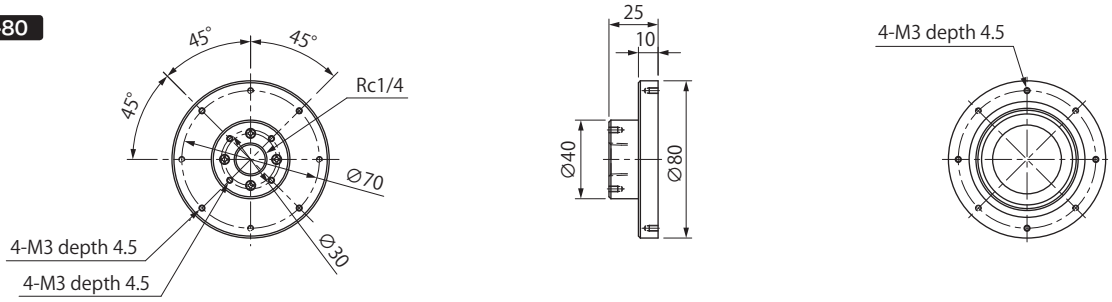

COP-100

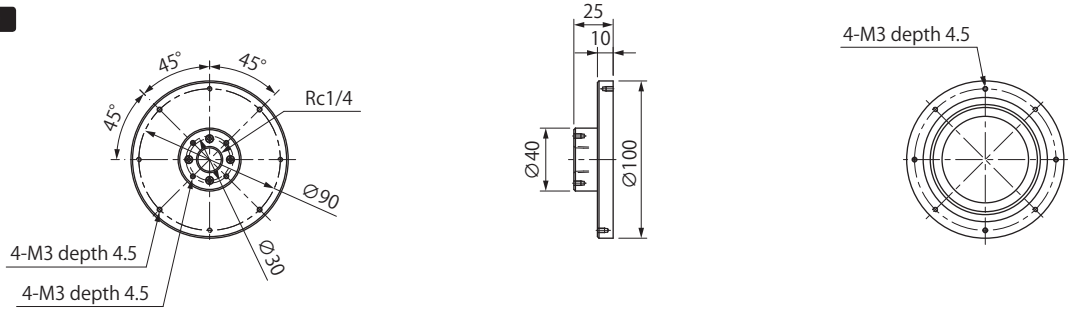

Dimensions (Damper)

(mm)

COP-20G

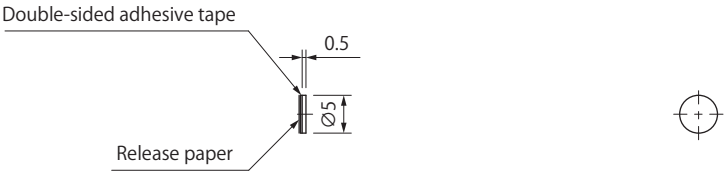

COP-40G

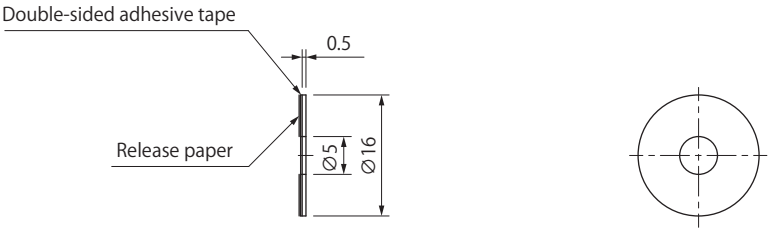

COP-60G

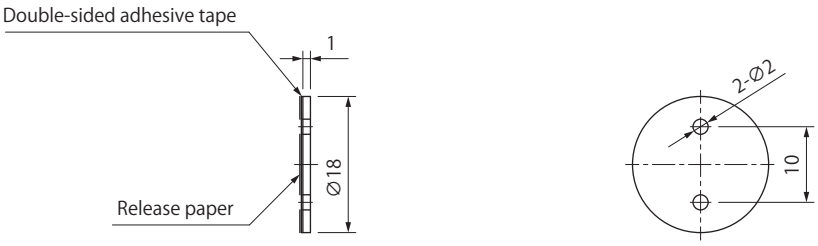

COP-80G

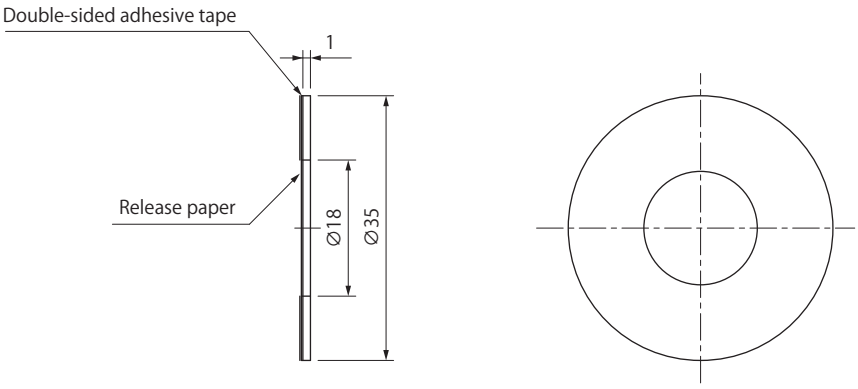

COP-100G

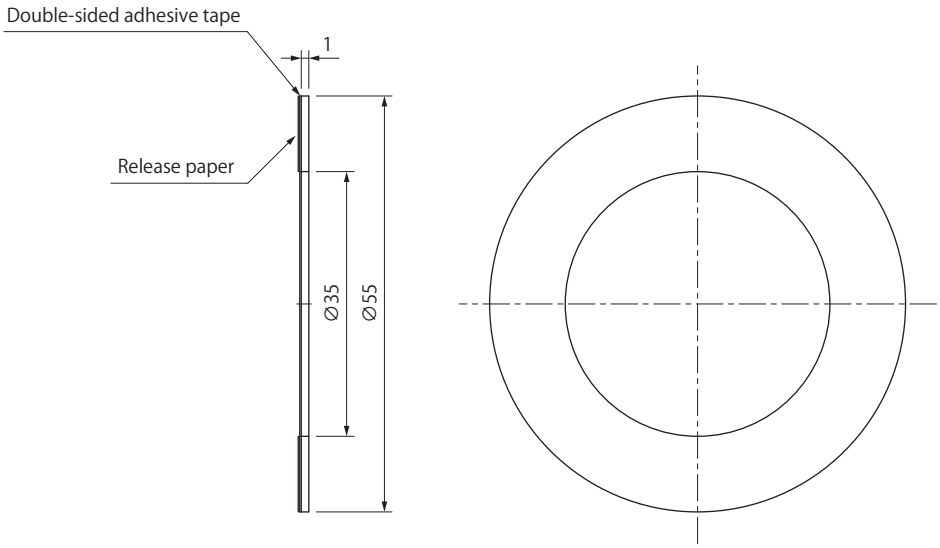

COPS Series

Slim Type Non-contact Cup

RoHS

Slim type・light type new appearance!

- Up to 30% height reduced compared to previous model
- Up to 44% weight reduced compared to previous model

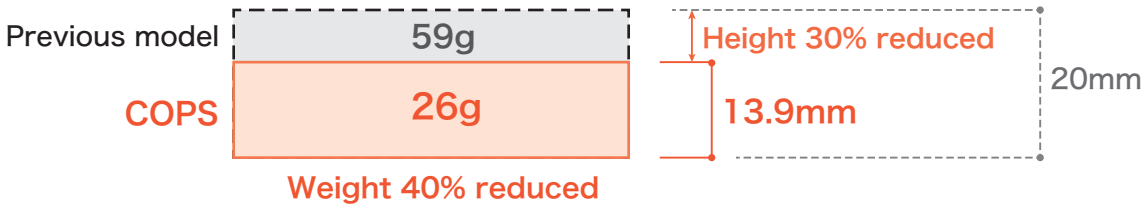

Side port specifications can mounted at Narrow space!

Side port specifications are added to the lineup

How to Order

COPS — 40 — T

① ②

① Cup O.D. (mm)

Symbol	Cup O.D.
40	ϕ40
60	ϕ60
80	ϕ80

② Air supply port

T	Top
Y	Side
Z	Without supply plate

Option Parts

COP — 40 G

①

① Applicable Cup

Symbol	Applicable Cup
40	COP40
60	COP60
80	COP80

※ When using COP with damper, there will be contact between the cup and the workpiece.

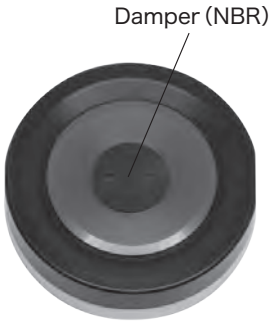

Specifications

Description \ Model number	unit	40-T	40-Y	40-Z	60-T	60-Y	60-Z	80-T	80-Y	80-Z
Fluid		Air, Non-corrosive gas, Non-fl ammable gas								
Port size		M5						Rc1/8		
Operating pressure range	MPa	0.15～0.5								
Operating temperature range	℃	0～45(No freezing)								
Lifting force	N	8			15			34		
Air consumption	L/min(ANR)	88			105			168		
Weight	g	32	26	14	86	66	38	176	147	90

※Lifting force and air consumption values in above table are effective when air supply pressure is set at 0.5 MPa and in the case of flat item suction.

Construction

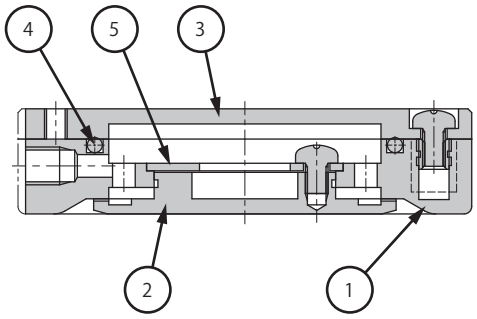

Component Parts

No.	Parts name	Material
1	Body	POM
2	Nozzle	Aluminum
3	Plate	Aluminum
4	O ring	NBR
5	Cover	SUS

Performance Charts

(mm)

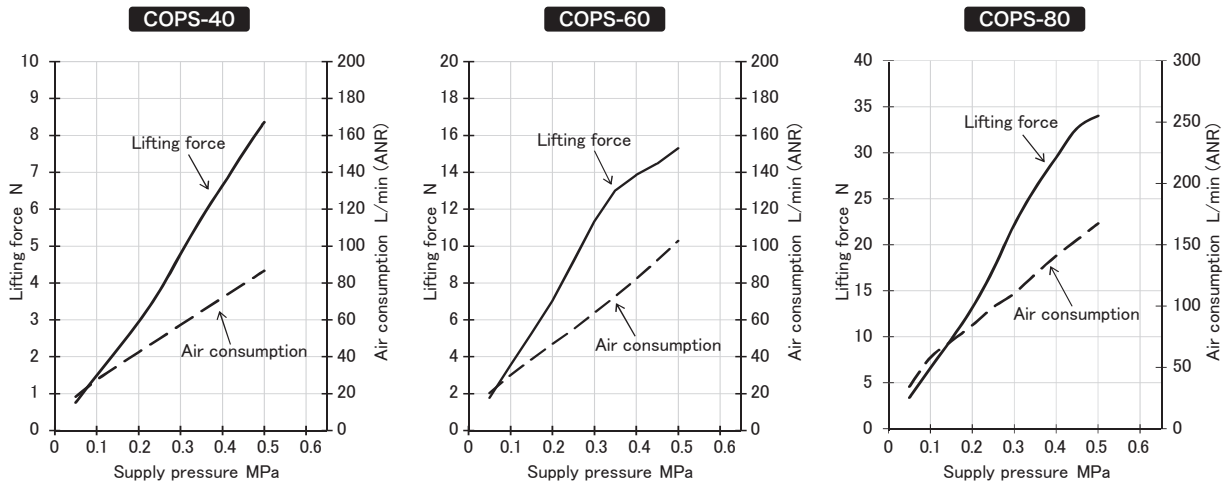

Dimensions (Body)

(mm)

COPS-40-T

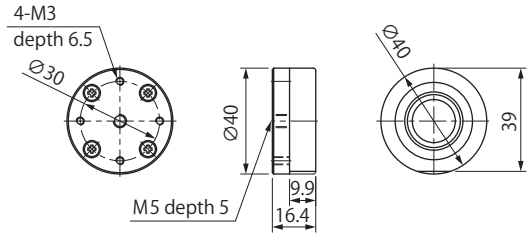

COPS-40-Y

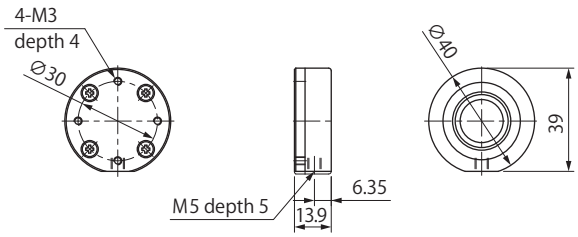

COPS-40-Z

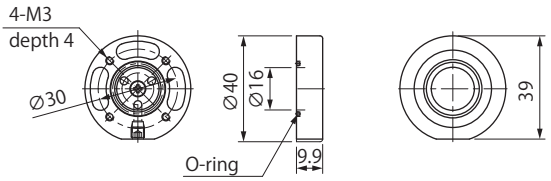

COPS-60-T

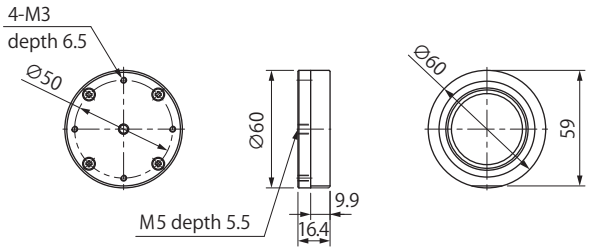

COPS-60-Y

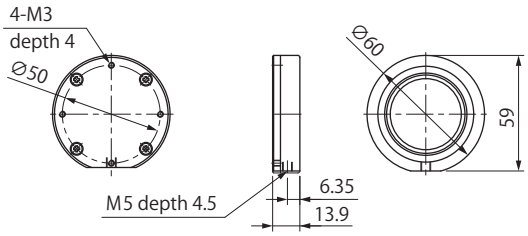

COPS-60-Z

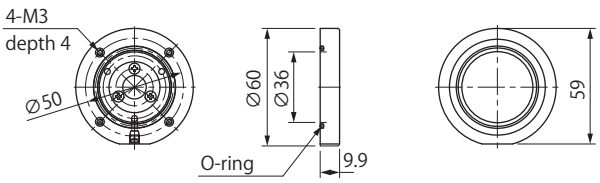

COPS-80-T

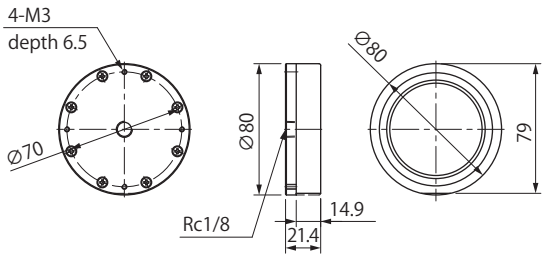

COPS-80-Y

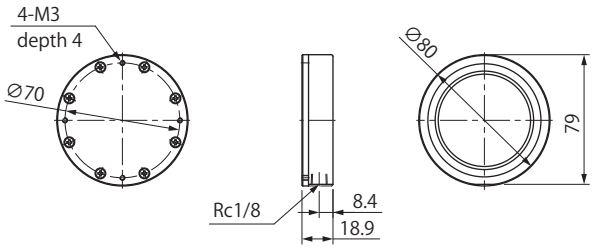

COPS-80-Z

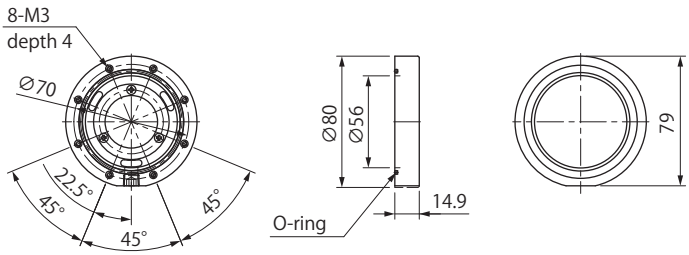

Dimensions (Damper)

(mm)

COP-20G

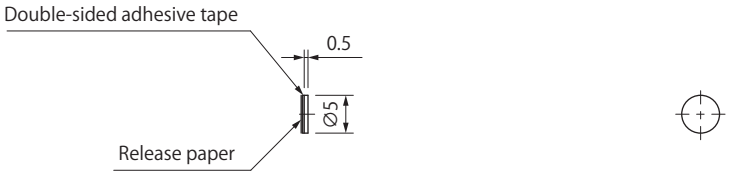

COP-40G

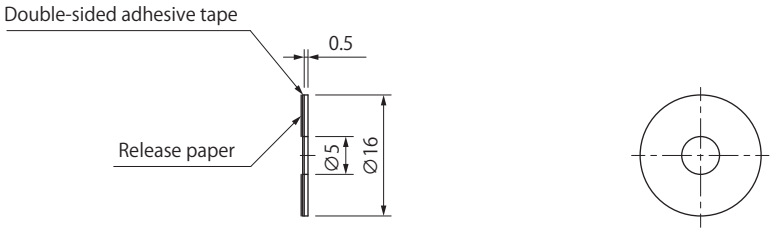

COP-60G

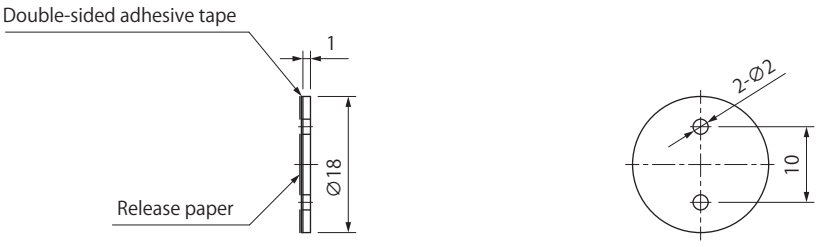

COP-80G

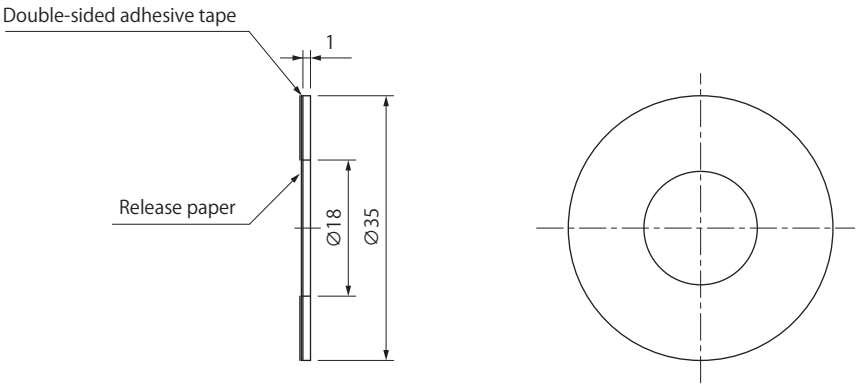

COP-100G

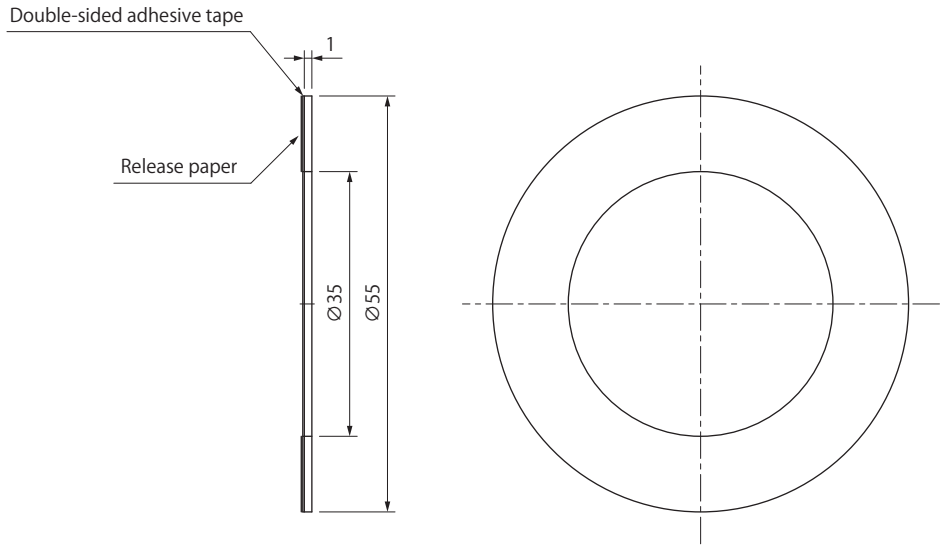

SWITCHING VALVE

Vacuum Switching Valve Precautions P.597

Vacuum switch valve Unit MPV3 series P.599

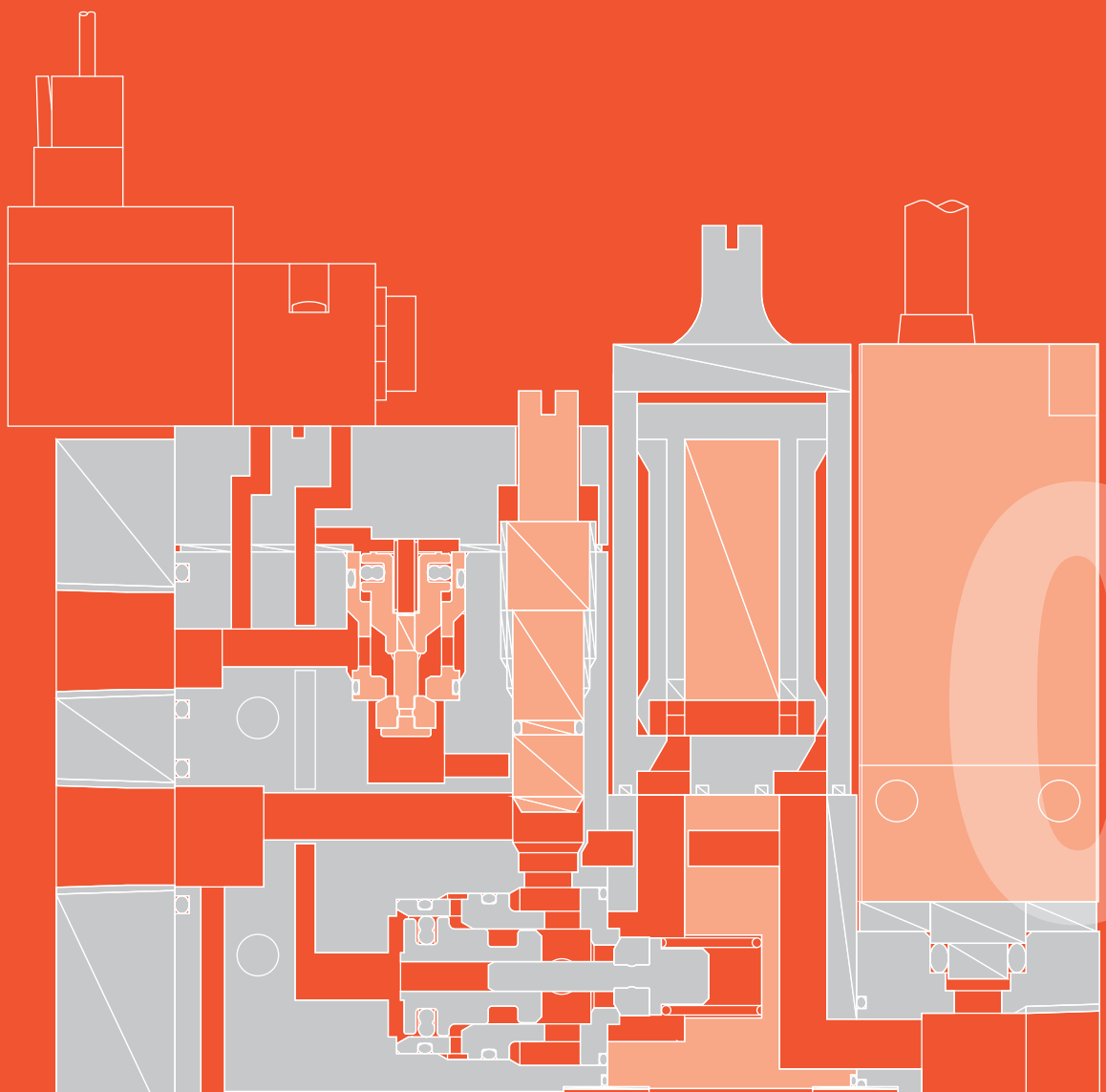

Make sure to read these precautions before use.
Make sure to also read and understand the "Safety Instructions"and precautions of each series.

MPV series

Piping

CAUTION

- MPV series is for the vacuum line
  Please do not supply compressed air to the VP, V ports.

Compressed-air supply side (P port)

- When using more than five manifolds, please supply compressed air from both sides.
- Use tubes with an inner diameter that is larger than 4 mm.

Vacuum supply side (VP port)

- Use as large-diameter piping as possible, making sure to use at least the minimum sizes shown below.

Number of stations	1	2	3	4	5	6	7	8
mm^2	7	14	21	28	35	42	49	56

- When using more than five manifolds, please supply vacuum from both sides.
- If required, please use a vacuum regulator or a tank.

Adjustment of the Suction Flow

CAUTION

- Use a flat-tipped screwdriver to turn the suction flow adjustment needle (see shape and dimension figure) to the right to reduce the flow and to the left to increase the flow.

MPV3 Series

Vacuum Switching Valve Unit

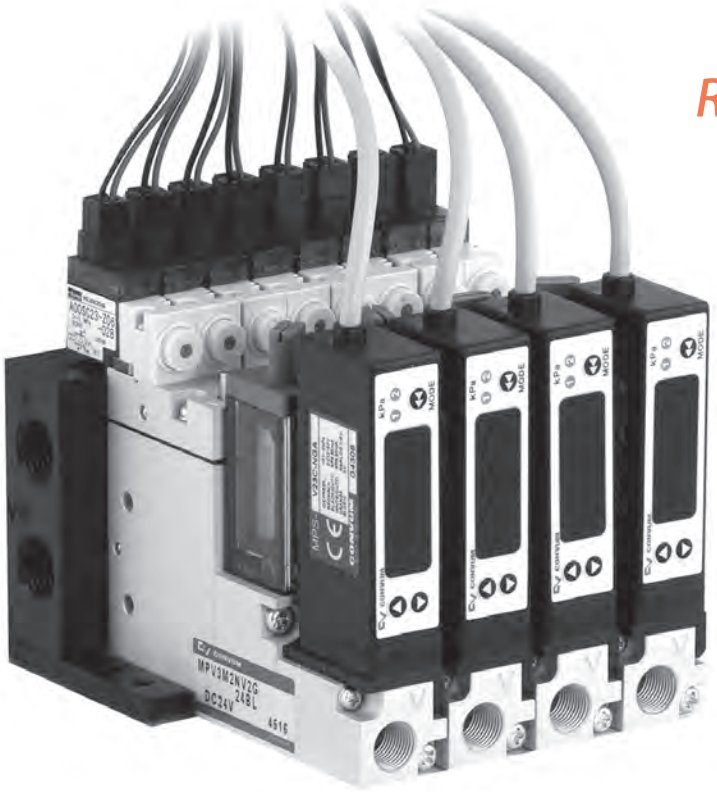

RoHS

High flexibility and easy handling.

Vacuum path controlled by internal valves switching with positive pressure

All in One Unit

Sensor, filter, vacuum flow adjustment function
Blow-off flow adjustment function

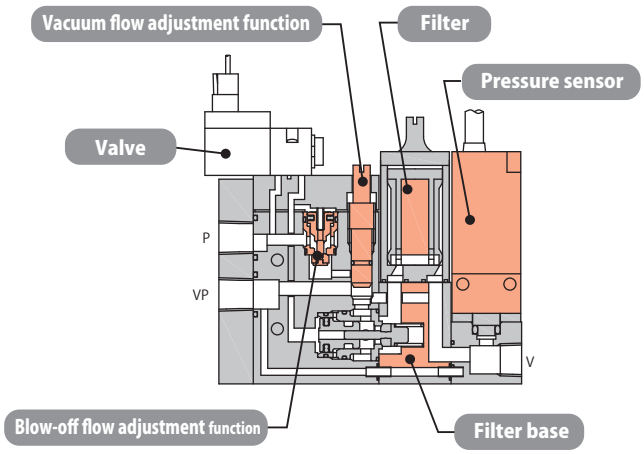

Can be mounted on manifold, up to 8 units

- Optimal for integrated management of vacuum source
- Differ specifications MPV3 can be putted together according to various purposes

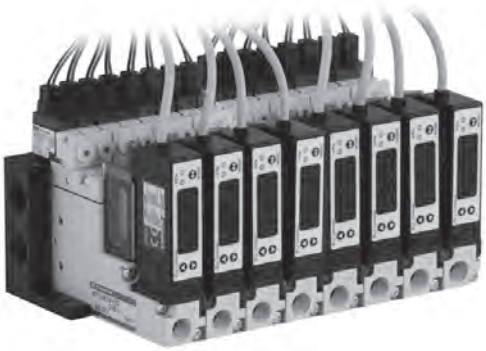

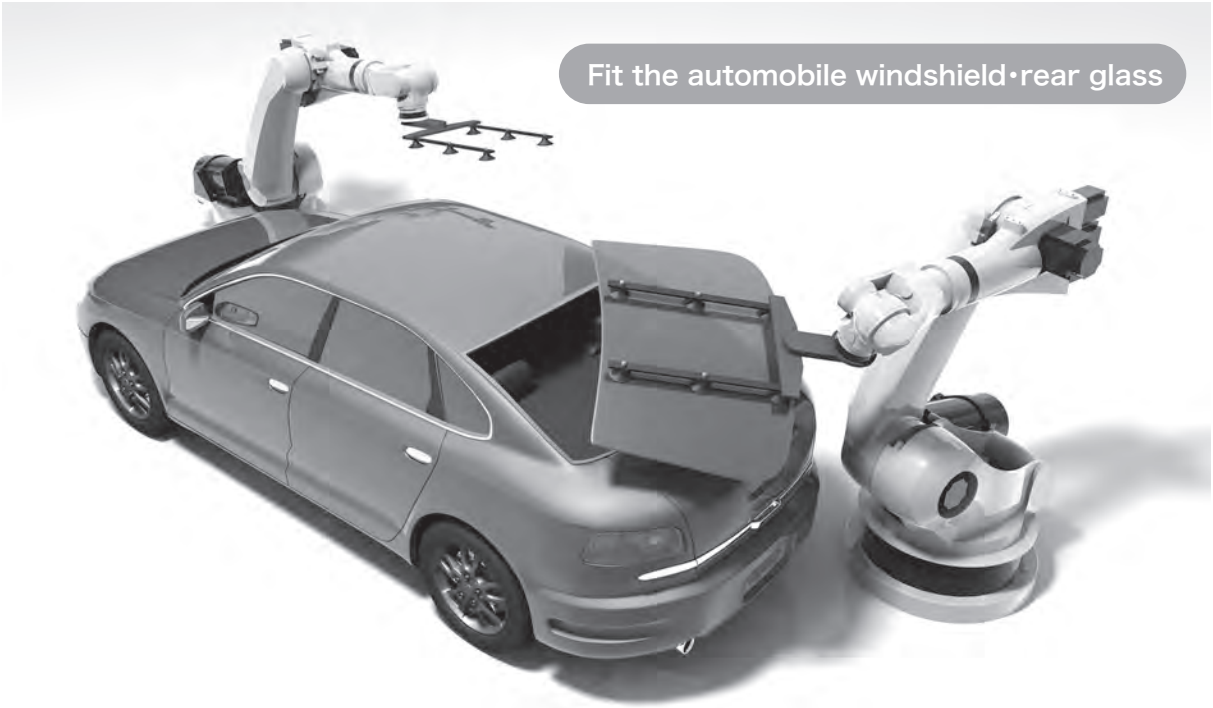
Fit the automobile windshield･rear glass

Cardboard assembly robot

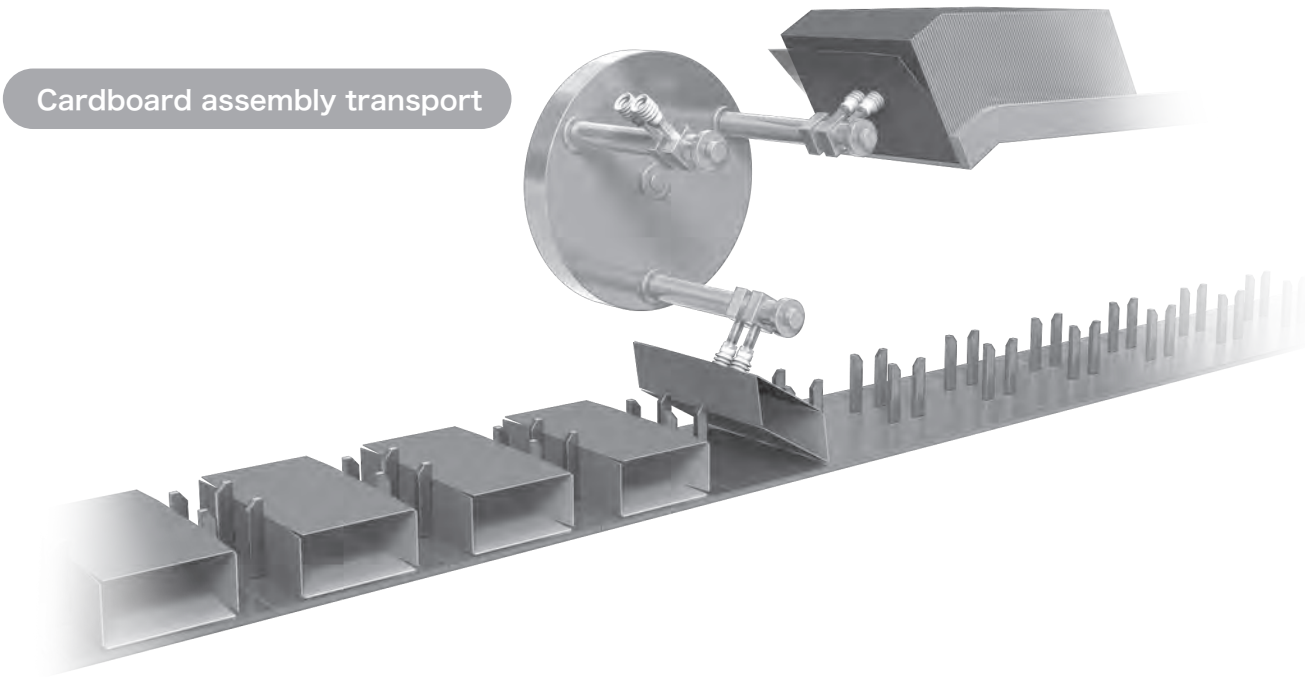
Cardboard assembly transport

MPV3 Vacuum Switching Valve Unit

How to Order

In case of manifold

MPV3	M	2	N	AB	24	B	L	3	1	2	L
	①	②	③	④	⑤	⑥	⑦	⑧	⑨	⑩	⑪

① Body Type

S	Single unit

M	Manifold unit

② Vaccum port

2	Rc1/8

③ Vacuum Flow Adjustment

N	Adjustable type

④ Pressure Sensor

Symbol	Sensor type	Pressure range [kPa]	Display	Switch output	Analog output	Input specifications
AB	MVS-030AB	-101~0	LED	NPN 1output	N/A	N/A
VG	MPS-V23G	-101~0	Digital	NPN 2 outputs	DC1~5V	N/A
RG	MPS-R23G	-101~500	Digital	NPN 2 outputs	DC1~5V	N/A
201	MVS-201 Note1	-101~500	Digital	NPN 1output	DC1~5V	Sink
Z	Without					

Note1)Energy-saving pressure sensor (solenoid valve control function mode).
※ Please consult with us for PNP output type.

⑤ Valve Voltage(V)

Symbol	Voltage
12	DC12 ★
24	DC24
100	AC100
200	AC200 Note1 ★

Note1) AC200V is AC100V connected with a converter.

⑥ Valve Function

A	Normally opened
B	Normally closed

⑦ Valve connection

L	Lead wire with connector

⑧ Manifold base

Symbol	No. of stations	Symbol	No. of stations
1	1station ★	5	5 stations
2	2 stations	6	6 stations ★
3	3 stations	7	7 stations ★
4	4 stations	8	8 stations ★

★are made to order

⑨ No. of Block Plates

Symbol	No. of block plates	Symbol	No. of block plates
0	N/A	4	4 pieces
1	1 piece	5	5 pieces ★
2	2 pieces	6	6 pieces ★
3	3 pieces	7	7 pieces ★

★are made to order

⑩ No. of Unit

Symbol	No. of unit	Symbol	No. of unit
1	1unit ★	5	5 units
2	2 units	6	6 units ★
3	3 units	7	7 units ★
4	4 units	8	8 units ★

⑪ Position of Unit

Nil	Figure of ⑧ and ⑩ are same
R	Placed to the right
L	Placed to the left

※Please turn the vacuum port towards your side, the unit you faced cloud be either left or right upon chosen.

Recommend! These model number below satisfy general needs and functions with product advantages. ※Please feel free to contact us.

Product code	Model number	Specifications	
		Pressure sensor	Vacuum Generation Valve Type
501800007	MPV3S2NZ24BL	N/A	Normally closed
501800004	MPV3S2NAB24BL	Electronic pressure sensor	Normally closed
501800262	MPV3S2NRG24BL	Digital	Normally closed

Imagine of manifold selection

Figure of⑧=figure of⑨+figure of⑩

MPV3M##24BL404

Manifold base：4stations,MPV3 4units

⑩MPV3 4units

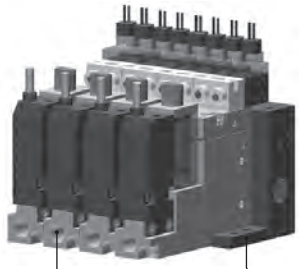

Vacuum port

⑧Manifold base (for 4 stations)

MPV3M##24BL413L

Manifold base：4stations, MPV3 3units

⑩MPV3 3units

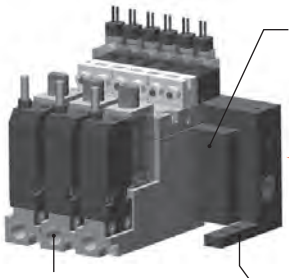

⑨Block Plate

This kind of selection is also available for future system expansion.

Vacuum port

⑧Manifold base (for 4 stations)

Turn the vacuum port towards your side, placed the unit to the left (L type for⑪)

Maintenance Parts

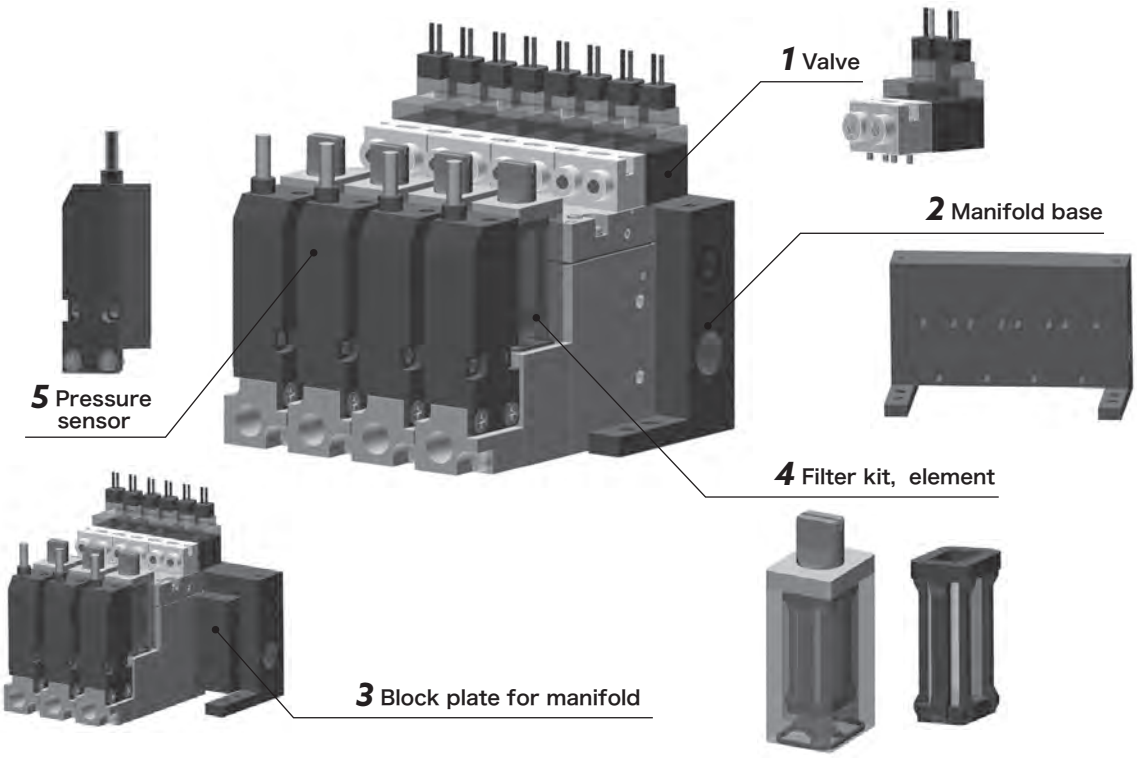

1 Valve ※Gasket and mounting screws are included

MC2 — 24 B 5 — V
① ② ③ ④

① Valve Voltage(V)

Symbol	Voltage
12	DC12 ★
24	DC24
100	AC100
200	AC200 Note1 ★

★are made to order

③ Lead Wire Length (mm)

5	500
15	1500

④ valve Position

V	for vacuum
D	for blow-off

※AC200V is AC100V connected with a converter.

② Valve Function

A	Normally opened
B	Normally closed

3 Block plate for manifold ※mounting screws are included

MPV3 — MM

※For preventing air leak when reduce the body number of the manifold.

5 Pressure sensor

Model number	Specifications
MVS-030AB-MPV3	Electronic, LED display
MPS-V23C-NGA-MPV3	Digital display
MPS-R23C-NGA-MPV3	
MVS-201-MPV3-A	Energy-saving, digital display

2 Manifold base ※Plug and mounting screws are included

MPV3 — M 1

Manifold base

Symbol	No. of stations	Symbol	No. of stations
1	1 station ★	5	5 stations
2	2 stations	6	6 stations ★
3	3 stations	7	7 stations ★
4	4 stations	8	8 stations ★

★are made to order

4 Filter

MC2 — E

F	Filter kit (with element)
E	Only element

MC2 - F

MC2 - E

6 Connector cable for MVS-201 sensor and valve

MC2 — C201
(Normally opened, normally closed)

Vacuum Switching Valve Specifications

Description ＼ Model number	Unit	MPV3	
		Vacuum valve	Blow-off valve
Fluid		Air (vacuum)	Non-lubricated compressed air
Ambient temperature	℃	0～50 (No Freezing)	
Operating pressure range (VP, DP)		-90～0kPa	0.3～0.5MPa
Valve function		Normally closed (B)・normally opened (A)	
Filter element filtration	μm	37	
Filter filtration area	mm^2	484	
Vacuum Switching Valve structures		Pilot poppet valve	
Effective area	mm^2	5.1	2.6
Control flow	L/min(ANR)	About 50 (at -80kPa)	About 60 (at 0.5MkPa)

※Supply more than compressed air 0.3MPa is necessary to operate.

Valve Specifications

Description ＼ Model number		Unit	AC100, AC200	DC12, DC24
Valve structures			3 port, direct operated poppet valve	
Allowable voltage fluctuation		%	±10	
Power consumption		W	-	0.6
Apparent power		VA	1.2/2.4	-
Thermal class			Class E	
Insulation type			Class B	
Manual override operation			Driver operating locking manual override	
Display/surge killer			LED/diode	
Lead wire			Lead wire with connector (500mm)	
Weight (with lead wire)	500mm	g	18	
	1500mm		31	

Weight (g)

Specifications			Weight
Single Unit	Valve function	Sensor	
Single Unit	Normally opened	N/A	245
		With MVS-030AB	258
		With MPS-V/R23	276
		With MVS-201	271
	Normally closed	N/A	242
		With MVS-030AB	255
		With MPS-V/R23	273
		With MVS-201	268
Single unit for manifold	Normally opened	N/A	216
		With MVS-030AB	229
		With MPS-V/R23	247
		With MVS-201	242
	Normally closed	N/A	213
		With MVS-030AB	226
		With MPS-V/R23	244
		With MVS-201	239

・Manifold Base

No. of station	1 station	2 stations	3 stations	4 stations	5 stations	6 stations	7 stations	8 stations
Weight	109	155	201	247	293	339	385	431

Calculation of weight for the manifold type

Single unit for manifold weight×No. of stations+manifold base

Example 1) 5 stations manifold normally closed valve and V23 sensor

244 × 5 + 293= 1,513g

Example 2) 4 stations manifold with normally closed valve,without sensor

216 × 4 + 247= 1,111g

Pressure Sensor Specifications

Description＼Model number		Unit	MPS-V23C-NGA-MPV3	MPS-R23C-NGA-MPV3	MVS-201-MPV3-A/W	MVS-030AB-MPV3
Fluid			Air (vacuum), Non-corrosive gas, Non-flammable gas			
Diaphragm			Silicon diaphragm			
Rated pressure range		kPa	-101～0	-101～500	-101～500	-101～0
Setting pressure range		kPa	-101.3～10	-101～500	-101～500	-101.2～-2.7
Withstand pressure		MPa	0.3	0.8	0.8	0.5
Ambient temperature range		℃	0～50 (No freezing)			
Ambient humidity range		%RH	35～85 (No condensation)			
Power supply voltage		V	DC12～24±10%, ripple (Vp-p)10% or less		DC24±10%, ripple (Vp-p)5% or less Note1	DC12～24±10%, ripple (Vp-p)10% or less
Current consumption		mA	55 or less		45 (not include the driven current for valve)	20
Switch output	Type		NPN open collector 2 outputs		NPN open collector 1 output	
	Maximum load current	mA	80		125	80
Analog output			DC1～5V (±0.1) linearity 0.5% F.S. output impedance1kΩ		-	-
Digital input(suction/ blow off command)		V	-		Non-contact 1 input (more than 1msec)	-
Repeatability		%	±0.2F.S 1digit or less		±0.3F.S 1digit or less	±0.3F.S
Temperature characteristic		%	Less than ±2F.S. (At standard temperature 25℃, range 0～50℃)			
Response time		ms	2.5 or less			2 or less
Hysteresis			Variable			
Display	Digital		3 1/2digital, 7-segment, red color LED		3digital, 7-segment, red color LED	
	Operation		OUT1：green color LED (ON lighting), OUT2：red color LED (ON lighting)		Output ON/OFF: red color LED Vacuum generation valve ON/OFF: green color LED	Red color LED (ON lighting)
Protection	Reversecurrent protection		With			
	Overvoltage protection		With			
	Output short circuit protection		With			
	IP class		IP40			
Vibration resistance			10～55Hz, total amplitude 1.5mm, 50m/s^2 2 hours each direction of XYZ		10～150Hz, total amplitude 1.5mm, 50m/s^2 2 hours each direction of XYZ	
Shock resistance		m/s^2	980, 3 times each direction of XYZ		100, 3 times each direction of XYZ	980, 3 times each direction of XYZ
Electrical connection			Grommet		M8 connector	Grommet
Cable			ϕ4 0.15mm^2 5 lead wires 2m		ϕ4 0.3mm^2 4 lead wires 2m	ϕ4 3 lead wiresX0.15mm 2m

Note 1) It must be consistent with the solenoid valve drive voltage.
Note 2) Suction/Blow-off command of MVS-201 sensor is normally opened. To set up to normally closed, please refer the manual No.6 to change logic from Lo to Hi.

MPV3 Vacuum Switching Valve Unit

Construction

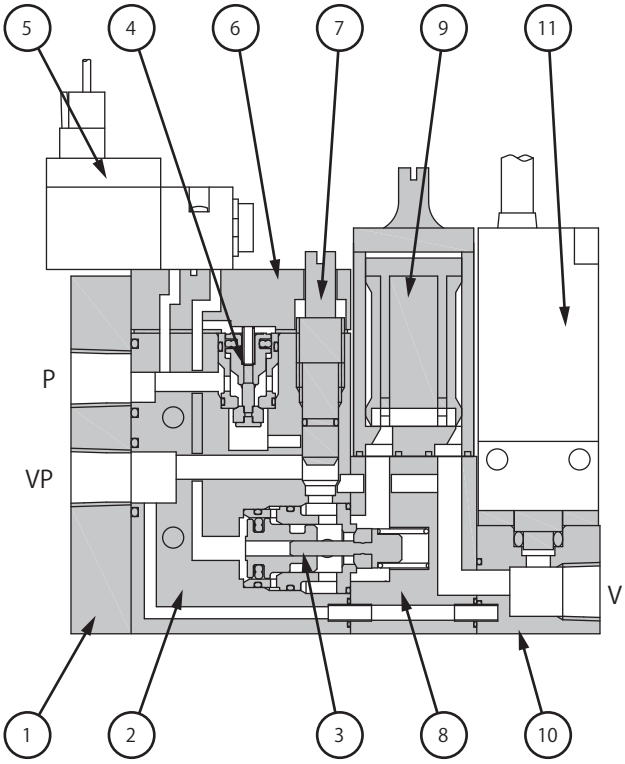

Component Parts

No.	Parts name	Material
1	Supply base	Aluminum
2	Body	Aluminum
3	Poppet valve for vacuum	Aluminum,NBR,SUS
4	Poppet valve for blow-off	Aluminum,NBR,SUS
5	Pilot poppet valve	-
6	Up plate	Aluminum
7	Vacuum flow control needle	Aluminum
8	Filter base	Aluminum
9	Filter Ass'y	-
10	Sensor base	Aluminum
11	Pressure sensor	-

Symbol

MPV3 normally opened (A) with sensor

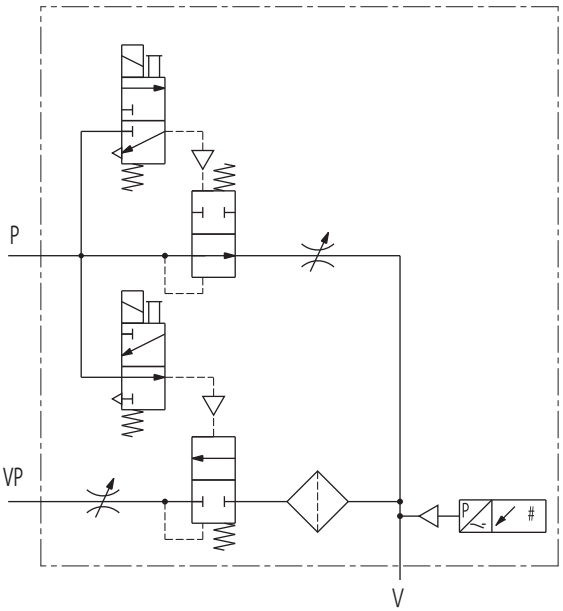

MPV3 normally closed(B) with sensor

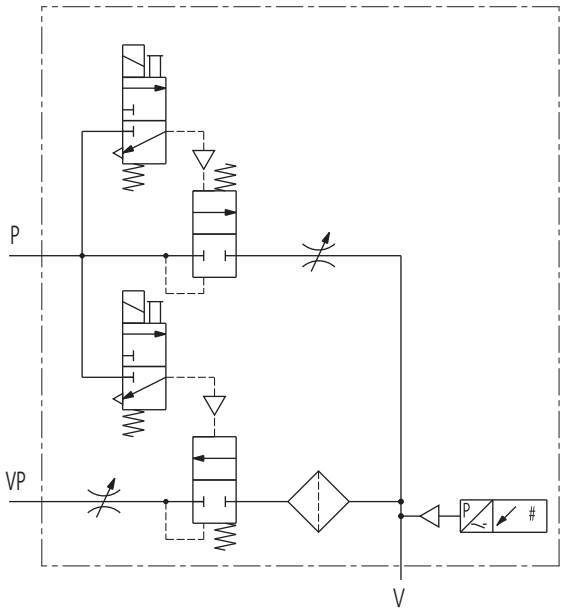

Dimensions

(mm)

Single Unit

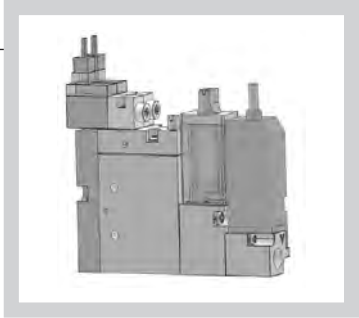

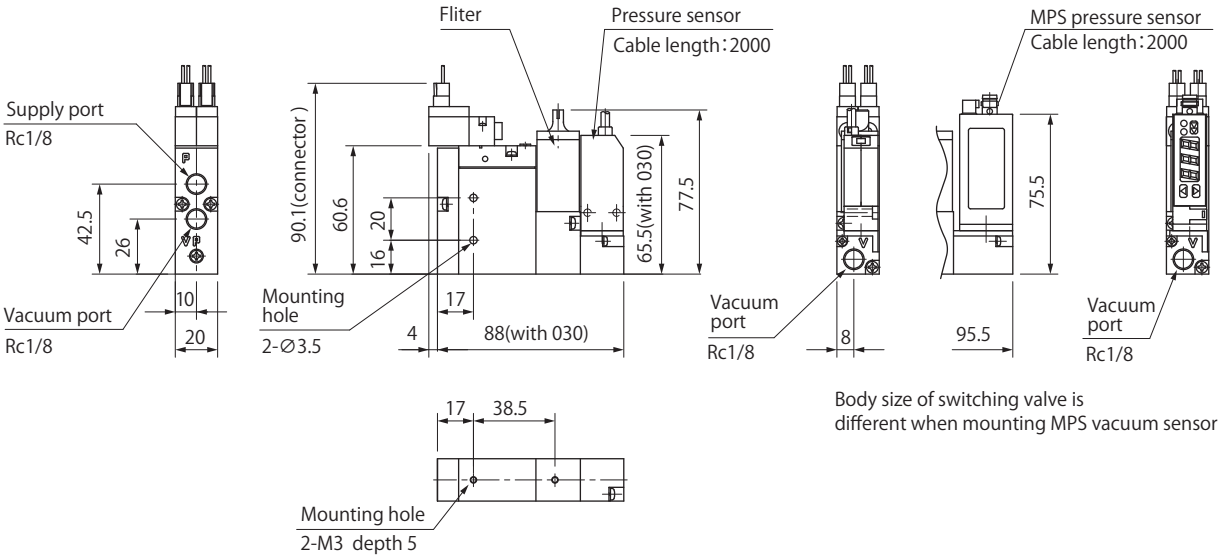

Body size of switching valve is different when mounting MPS vacuum sensor

Manifold Unit

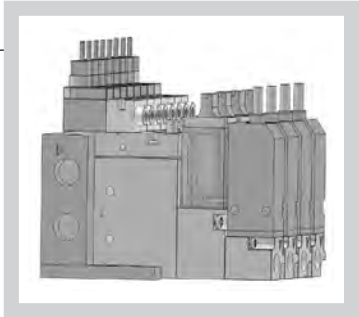

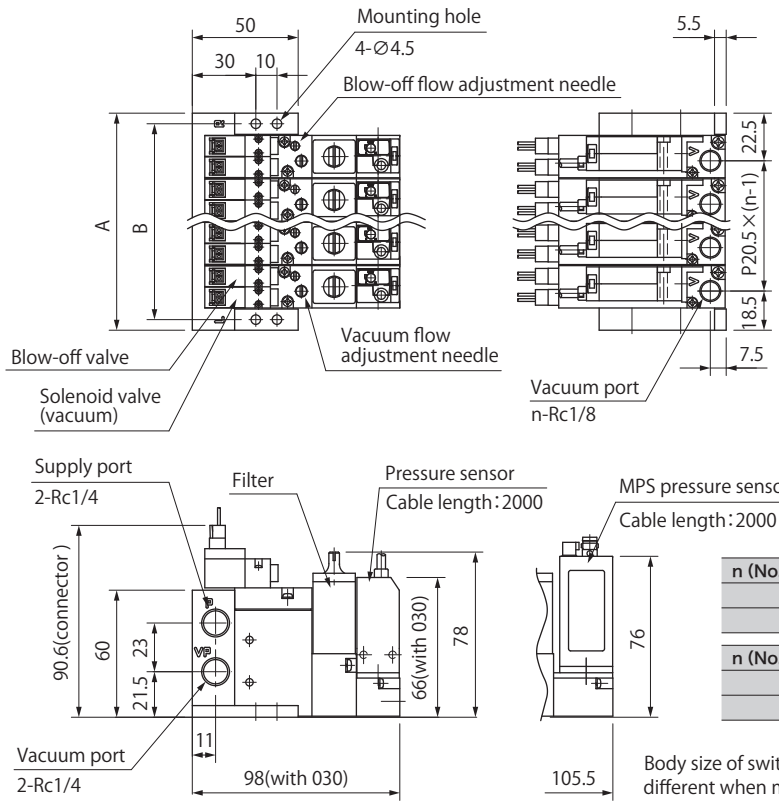

n (No. of units)	1	2	3	4
A	41	61.5	82	102.5
B	31	51.5	72	92.5

n (No. of units)	5	6	7	8
A	123	143.5	164	184.5
B	113	133.5	154	174.5

Body size of switching valve is different when mounting MPS vacuum sensor

OTHER PNEUMATIC EQUIPMENTS

Miniature air cylinder Precautions P.609

Miniature Cylinder With Push-in Connector MKY series P.613

Miniature Cylinder With Barb Connector TKY series P.615

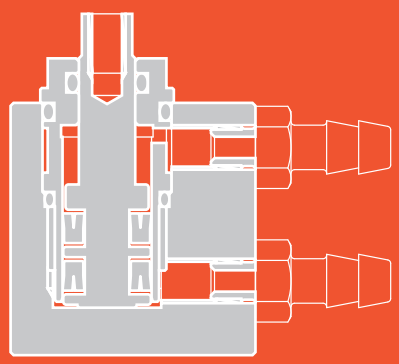

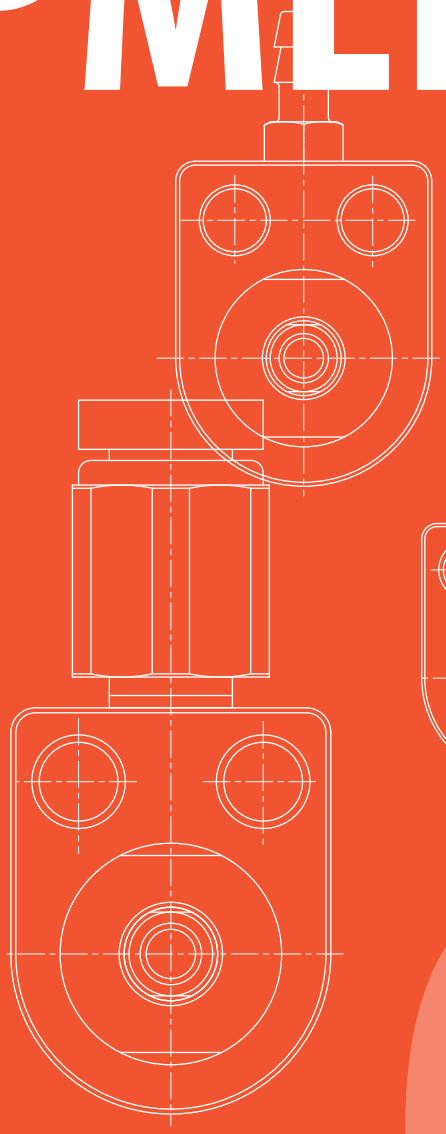

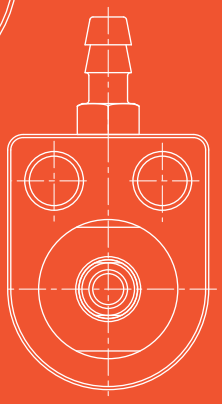

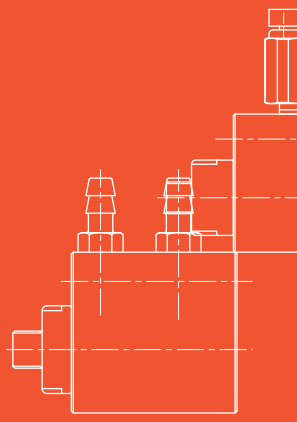

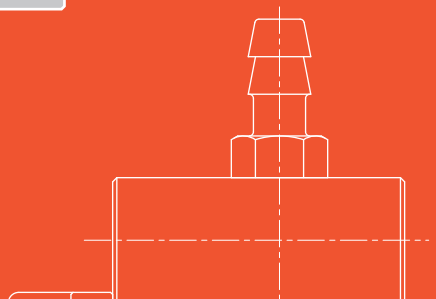

07

Miniature air cylinder precautions

Outlines

The miniature cylinder has a larger assortment of cylinder dimeters from ϕ4.5 through ϕ10, and the compact cylinder is designed for clamping jigs, gripping, insert, stoppers, presses and many other applications.The coupling systems also include barb connector and push-in connector for easy and simple installation and piping.

Cautions for Use of the Cylinder

1) Do not disassemble the cylinder while compressed air is being supplied. Always make certain that the cylinder is separated from the air pressure line or the residual pressure in the supply line shows zero. Air remaining in the cylinder may cause danger.
2) When disassembling, inspecting, or servicing single acting type cylinders, springs may be ejected. Always wear safety goggles while working.
3) Use ISOVG32(JIS turbine oil #90) or equivalent, or ISOVG46 oiling. Never use machine oil, since it may cause damage on packing.
4) Before installing the cylinder, sufficiently flush the connecting pipes so that dust and chips do not enter inside of the cylinder.
5) Use the cylinder in such a way that the load applied to the piston rod of the cylinder is directed in the direction of the axis at all times. Crosswise loads may bend the piston rod or damage the thread at the end.
6) In the case of single acting type cylinder, avoid use of the cylinder in such a way that a heavy burden is applied to the piston rod when the piston is retracting.
7) Do not use the cylinder in the environment where salt water, acid or alkaline material is present.
8) Use clean compressed air after dust and moisture is removed through installed air filters and air dryers.

Computation of Air Flow and Air Consumption

Use the formulas below for consumption of air flow and air consumption quantity of air cylinders.

●Air consumption

$$Q_1 : \frac{\pi D^2}{4} \times L \times \frac{P+0.1013}{0.1013} \times 10^{-6}$$

$$Q_2 : \frac{\pi (D^2-d^2)}{4} \times L \times \frac{P+0.1013}{0.1013} \times 10^{-6}$$

$$Q : Q_1 + Q_2$$

Q : Air consumption per reciprocation (L)
Q_1 : Air consumption per extension (L)
Q_2 : Air consumption per retraction (L)
D : Inside diameter of cylinder (mm)
d : Rod diameter (mm)
L : Cylinder stroke (mm)
P : Operating pressure (MPa)

Air consumption quantity per 1mm of stoke (TKY/MKY) [mL (ANR)]

Cylinder diameter (mm)	Rod diameter (mm)	Operating air pressure (MPa)				
		0.2	0.3	0.4	0.5	0.6
4.5	3	0.074	0.098	0.122	0.147	0.171
6	3.8	0.134	0.179	0.224	0.268	0.313
8	5.5	0.228	0.304	0.380	0.456	0.531
10	6	0.383	0.510	0.637	0.765	0.892

Figures in the table are those for calculating the air consumption of one reciprocating motion in the case of 1mm stroke cylinders.

Cylinder Thrust

The theoretical thrust of air cylinders can be obtained by multiplying the effective pressure area by air pressure. For selection of the inside diameter of the cylinder, take into consideration that actual cylinder thrust is affected by friction resistance of sliding components of the cylinder may loss pressure due to piping and other factors. The figures in the table below shows calculated ligers. Therefore, multiply the figures by approximately 70% of load factor and use the result for selection of the inside diameter of the cylinder.

※Load factor=Load/Calculated figures

●Extending cylinder force $Fo=(A_1 \times P-S) \times B$

●Retracting cylinder force $FH=(A_2 \times P-S) \times B$

Note: 1 Pa = 1 N/m^2

A_1 : Pressure area of extend side (mm²)
A_2 : Pressure area of retract side (mm²)
D : Inside diameter of cylinder (mm)
d : Rod diameter (mm)
P : Operating air pressure (MPa)
B : Load factor (1 for 100%)
S : Spring return force (N)

$$A_1=\frac{\pi}{4}D^2$$

$$A_2=\frac{\pi}{4}(D^2-d^2)$$

■Single acting type MKY-O, TKY-O (Theoretical thrust value)

(N)

Operating system ＼ Item	Cylinder I.D. (mm)	Stroke (mm)	Pressure area (mm^2)	Operating air pressure (MPa)				
				0.2	0.3	0.4	0.5	0.6
Single acting extension	4.5	3	15.9	*	2.71	4.30	5.89	7.48
		6		*	2.89	4.48	6.07	7.66
	6	4	28.3	*	4.64	7.47	10.30	13.13
		8		*	3.22	6.05	8.88	11.71
	8	4	50.3	3.59	8.62	13.65	18.68	23.71
		8		3.35	8.38	13.41	18.44	23.47
	10	5	78.5	7.30	15.15	23.00	30.85	38.70
		10		7.63	15.48	23.33	31.18	39.03

*Cylinder may not operate at * marks at 0.2Mpa or less.

■Spring return force MKY-O, TKY-O

(N)

Cylinder I.D.×Stroke	Zero stroke	Stroke end
ϕ 4.5 × 3	1.47	2.06
ϕ 4.5 × 6	1.27	1.88
ϕ 6 × 4	2.35	3.85
ϕ 6 × 8	3.31	5.27
ϕ 8 × 4	4.51	6.47
ϕ 8 × 8	5.11	6.71
ϕ 10 × 5	5.00	8.40
ϕ 10 × 10	5.42	8.07

MKY/TKY Series

Miniature Cylinder

RoHS

Push-in connector type and barb connector type can be selected.

Best suitable for space-saving design.

For clamping jig, gripping and many other applications.

Easily to mount to jig and panel.

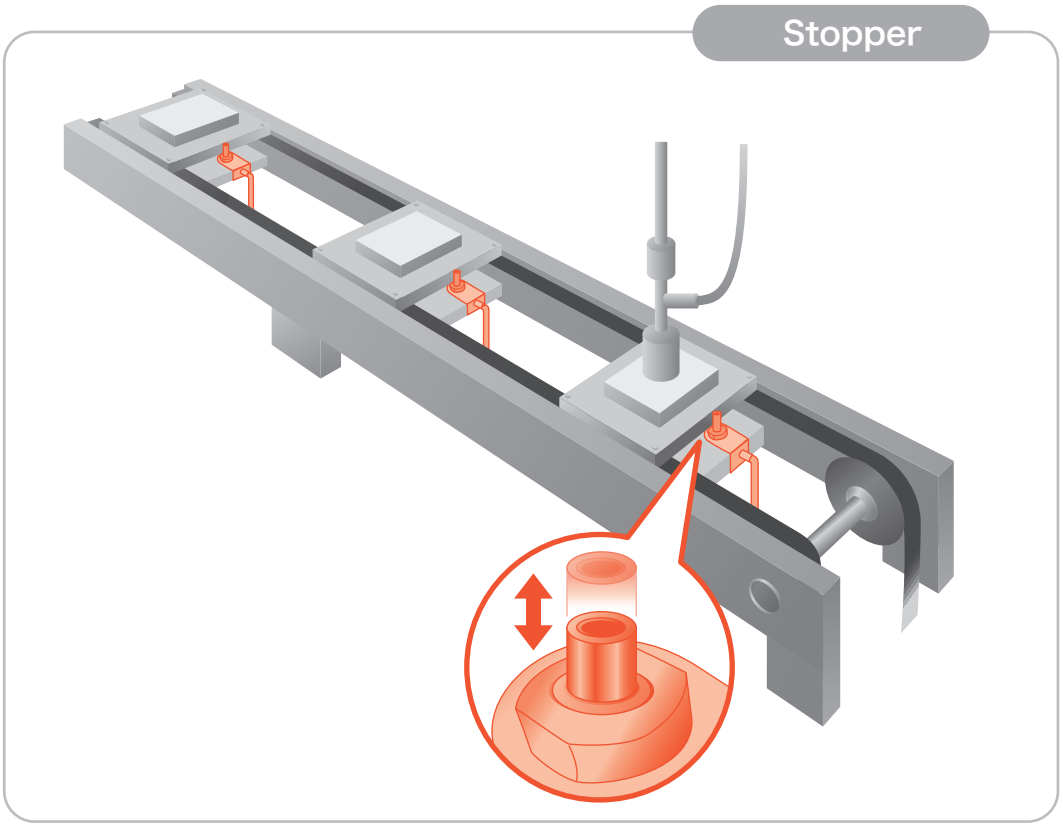

End face alignment

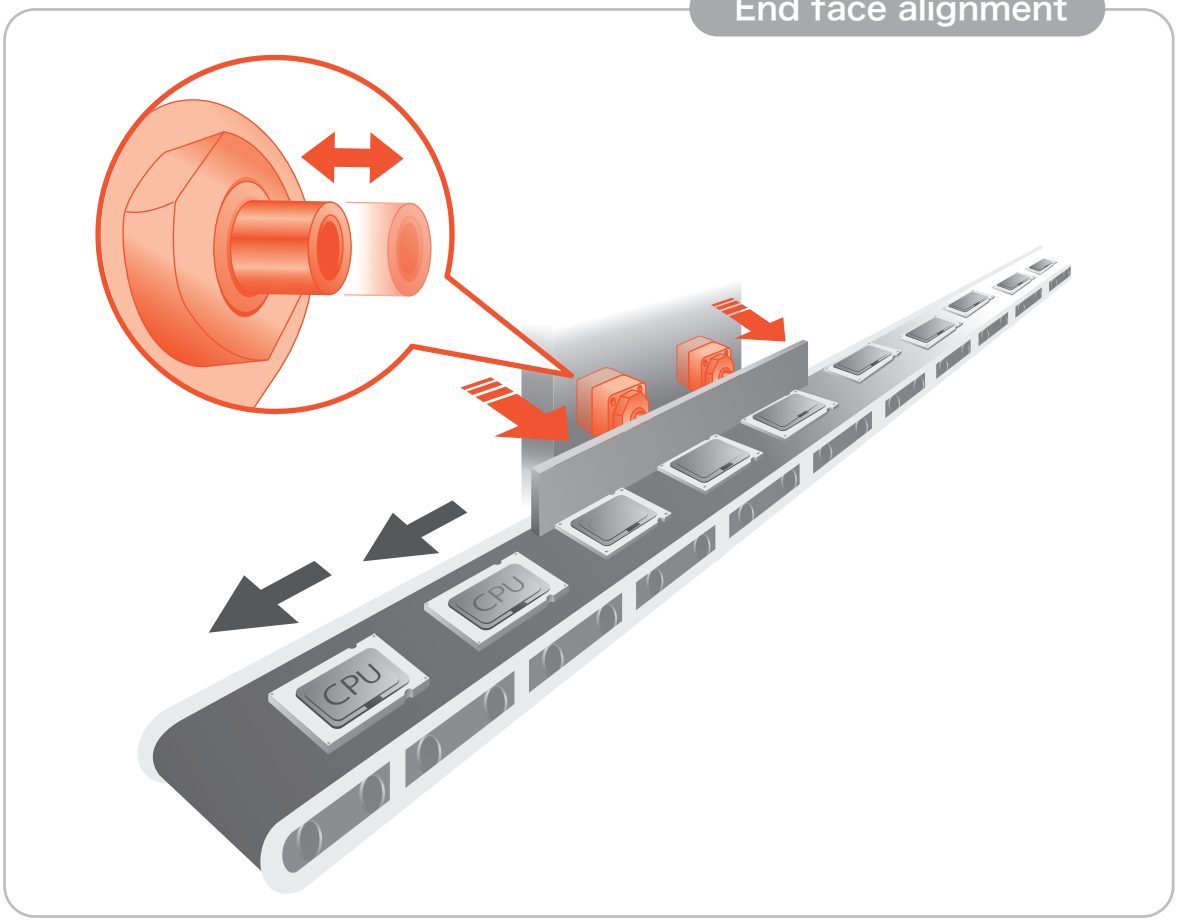

Positioning

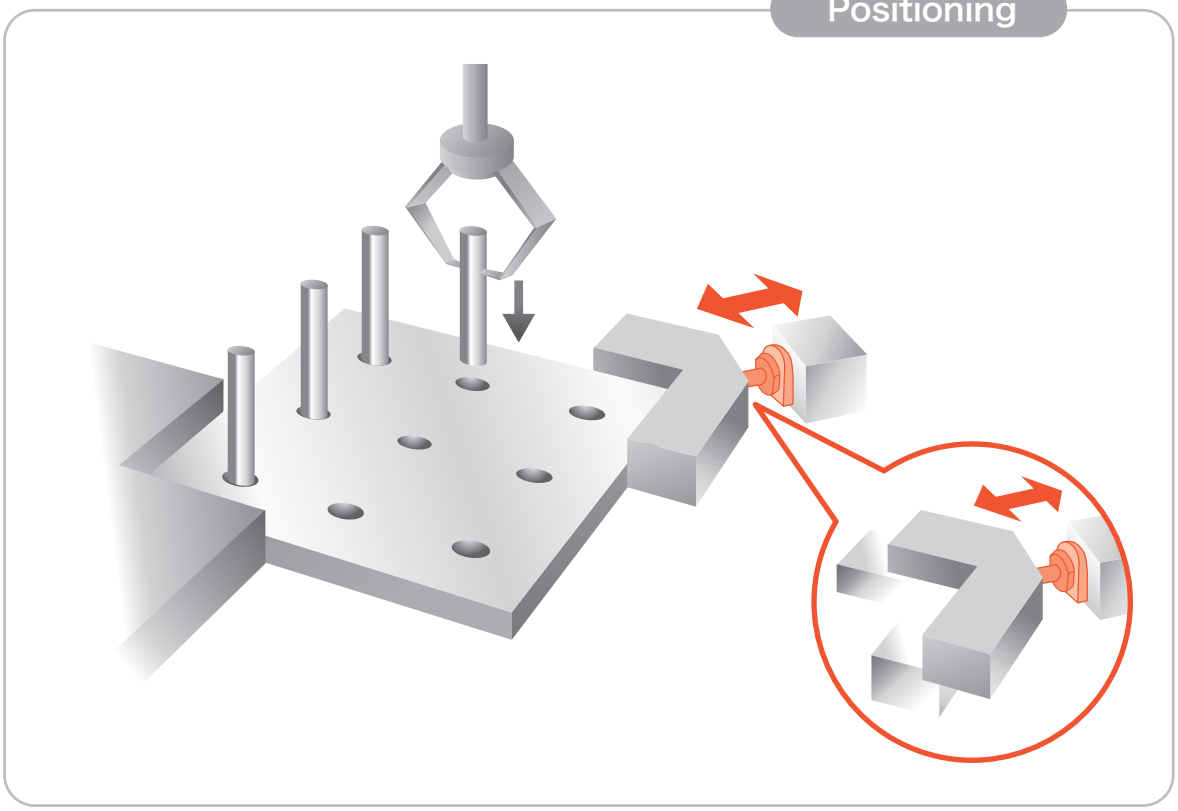

MKY Miniature Cylinder with Push-in Connector

- With push-in connector
- It can be directly attached to the body
- Double acting and single acting can be selected

Symbol

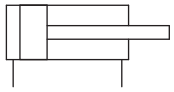

Double acting

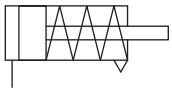

Single acting (extending type)
Spring return

How to Order

MKY – W – 6X4
① ②

① Acting Type

O	Single acting (extending type)
W	Double acting (ϕ6, ϕ8, ϕ10 only)

② Tube I.D. × Stroke(mm)

4.5X3	ϕ4.5×3	8X4	ϕ8×4
4.5X6	ϕ4.5×6	8X8	ϕ8×8
6X4	ϕ6×4	10X5	ϕ10×5
6X8	ϕ6×8	10X10	ϕ10×10

Standard stroke

Tube I.D.(mm)	Standard stroke (mm)
4.5	3, 6
6	4, 8
8	4, 8
10	5, 10

Specifications

Description ＼ Tube I.D.	mm	ϕ 4.5	ϕ 6	ϕ 8	ϕ 10
Acting type		Double acting/single acting (extending type)			
Fluid		Non-lubricated compressed air			
Withstand pressure	MPa	0.9			
Max. Operating pressure	MPa	0.6			
Min. Operating pressure	MPa	0.2			
Ambient and fluid temperature	℃	0~60(No Freezing) Note1			
Cushion		N/A			
Stroke allowance	mm	0~+1.0			
Piston speed range	mm/s	50~750			

Note1) When using under 5℃, dry air should be supplied to prevent drain from freezing.

Construction

Single Acting (extending type)

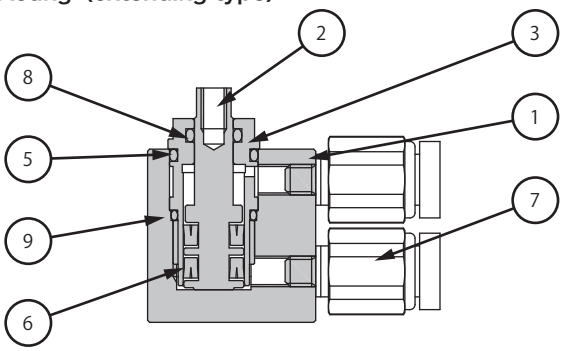

Double Acting

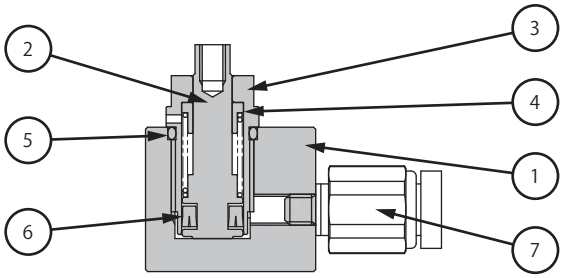

Component Parts

No.	Parts name	Material
1	Body	Aluminum
2	Piston	SUS
3	Rod cover	Brass
4	Spring	SUS
5	O ring	NBR
6 Note 1	O ring	H-NBR
	Mini Y packing	H-NBR
7	Push-in connector	-
8	O ring	H-NBR
9	O ring	NBR

Note1) Use mini Y Packing for cylinder I.D.ϕ6 or more.

Dimensions

(mm)

Single Acting (extending type)
MKY-O

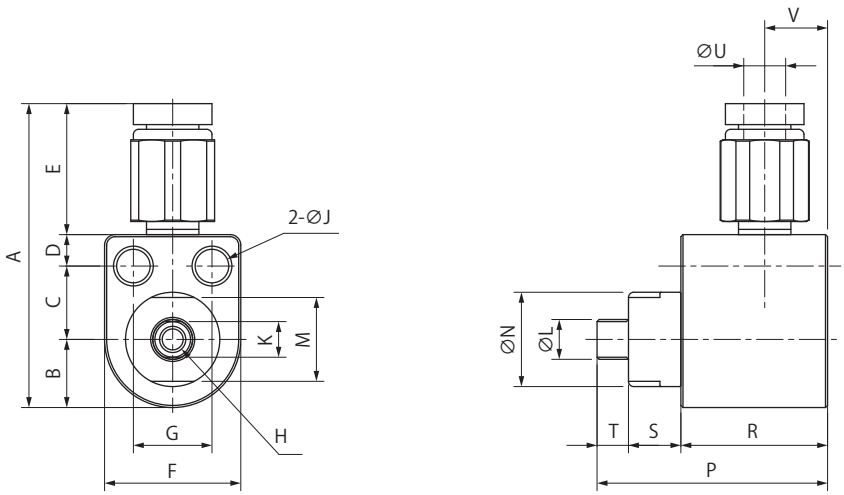

Model number	A	B	C	D	E	F	G	H	J	K	L	M	N	P	R	S	T	U	V	Port screw
MKY-O-4.5X3	28.5	5.5	6	2.5	14.5	11	6.5	M2×0.4 depth 3.5	2.7	2.6	3	7	8	18	10	5	3	4	5	M3
MKY-O-4.5X6														24	16					
MKY-O-6X4	31	6.5	7	3		13	7.5	M2.5×0.45 depth 4	3.2	3.4	3.8	8	9	22	14				6	
MKY-O-6X8														31	23					
MKY-O-8X4	36	8	9		16	16	10	M3×0.5 depth 5		4.5	5.5	12	14	23	14	6		6	7	M5
MKY-O-8X8														31	22					
MKY-O-10X5	37	9				18	12			5	6	14	16	28	18	7			8	
MKY-O-10X10														39	29					

Double Acting
MKY-W

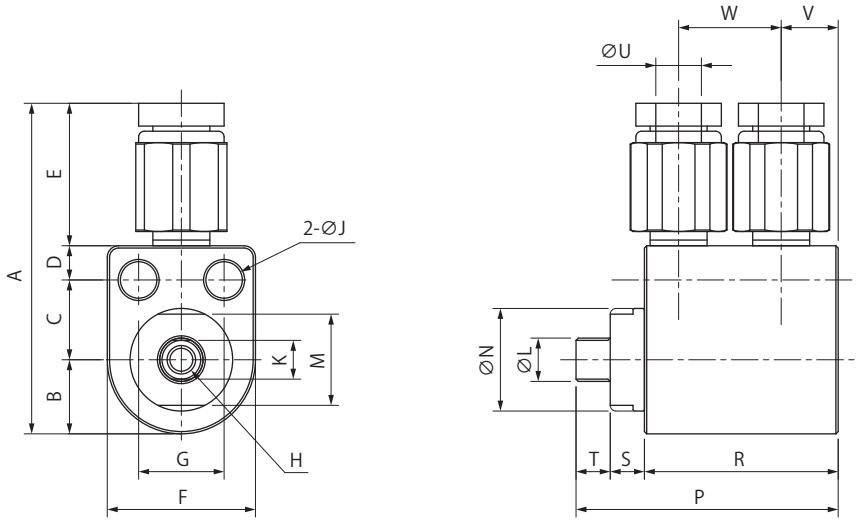

Model number	A	B	C	D	E	F	G	H	J	K	L	M	N	P	R	S	T	U	V	W	Port screw
MKY-W-6X4	31	6.5	7	3	14.5	13	7.5	M2.5×0.45 depth 4	3.2	3.4	3.8	8	9	23	17	3	3	4	5	9	M3
MKY-W-6X8														27	21				6		
MKY-W-8X4	36	8	9		16	16	10	M3×0.5 depth 5		4.5	5.5	12	14	28		4		6		12	M5
MKY-W-8X8														30	23				6.5		
MKY-W-10X5	37	9				18	12			5	6	14	16	29	22						
MKY-W-10X10														33	26				9		

TKY Miniature Cylinder with Barb Connector

- With barb connector
- It can be directly attached to the body
- Double acting and single acting can be selected

Symbol

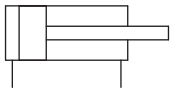

Double acting

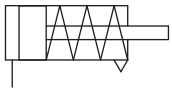

Single acting (extending type)
Spring return

How to Order

TKY – W – 6X4
① ②

① Acting Type

O	Single acting (extending type)
W	Double acting

② Tube I.D. × Stroke(mm)

4.5X3	ϕ4.5×3	8X4	ϕ8×4
4.5X6	ϕ4.5×6	8X8	ϕ8×8
6X4	ϕ6×4	10X5	ϕ10×5
6X8	ϕ6×8	10X10	ϕ10×10

Standard stroke

Tube I.D.(mm)	Standard stroke (mm)
4.5	3, 6
6	4, 8
8	4, 8
10	5, 10

Specifications

Description ＼ Tube I.D.	mm	ϕ 4.5	ϕ 6	ϕ 8	ϕ 10
Acting type		Double acting/single acting (extending type)			
Fluid		Non-lubricated compressed air			
Withstand pressure	MPa	0.9			
Max. Operating pressure	MPa	0.6			
Min. Operating pressure	MPa	0.2			
Ambient and fluid temperature	℃	0~60(No Freezing) Note 1			
Cushion		N/A			
Stroke allowance	mm	0~+1.0			
Piston speed range	mm/s	50~750			

Note1) When using under 5℃ , dry air should be supplied to prevent drain from freezing.

Construction

Single Acting (extending type)

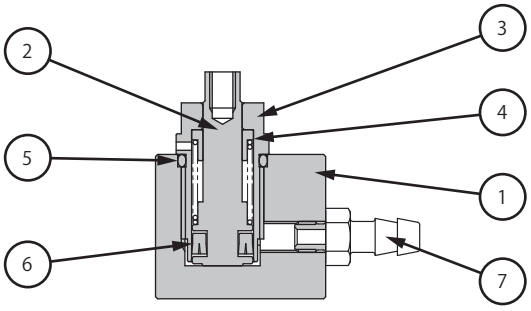

Double Acting

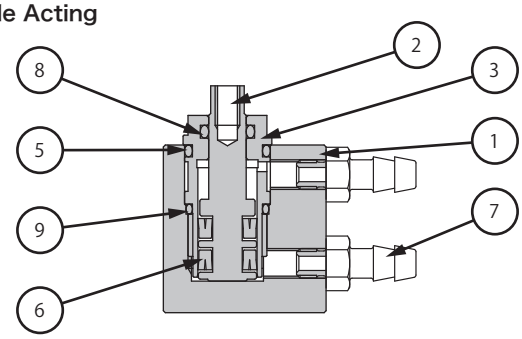

Component Parts

No.	Parts name	Material
1	Body	Aluminum
2	Piston	SUS
3	Rod cover	Brass
4	Spring	SUS
5	O ring	NBR
6 Note 1	O ring	H-NBR
	Mini Y packing	H-NBR
7	Barb connector	Brass
8	O ring	H-NBR
9	O ring	NBR

Note1) Use mini Y Packing for cylinder I.D.ϕ6 or more.

Dimensions

(mm)

Single Acting (extending type)
TKY-O

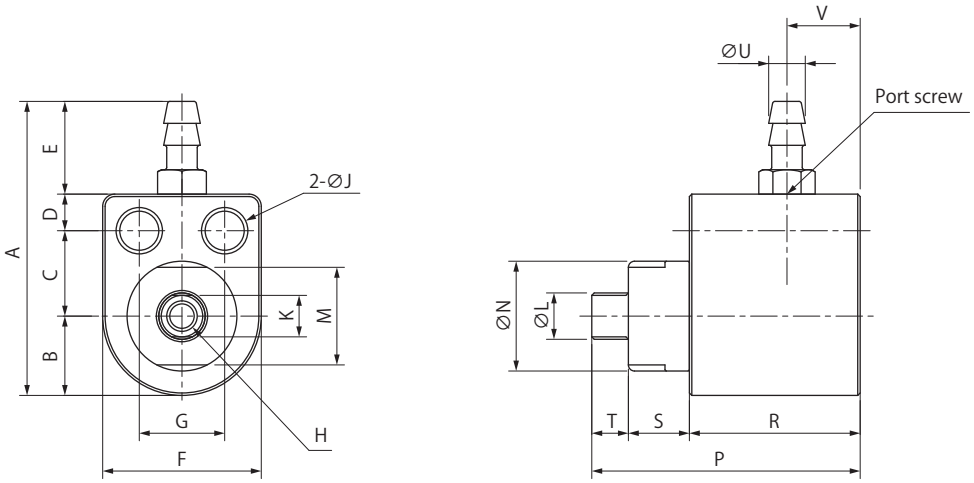

Model number	A	B	C	D	E	F	G	H	J	K	L	M	N	P	R	S	T	U	V	Port screw
TKY-O-4.5X3	21.6	5.5	6	2.5	7.6	11	6	M2×0.4 depth 3.5	2.7	2.6	3	7	8	18	10	5	3	3	5	M2.5
TKY-O-4.5X6														24	16					
TKY-O-6X4	24.1	6.5	7	3		13	7	M2.5×0.45 depth 4	3.2	3.4	3.8	8	9	22	14				6	
TKY-O-6X8														31	23					
TKY-O-8X4	31	8	9		11	16	10	M3×0.5 depth 5		4.5	5.5	12	14	23	14	6		5	7	M5
TKY-O-8X8														31	22					
TKY-O-10X5	32	9				18	12			5	6	14	16	28	18	7			8	
TKY-O-10X10														39	29					

Double Acting
TKY-W

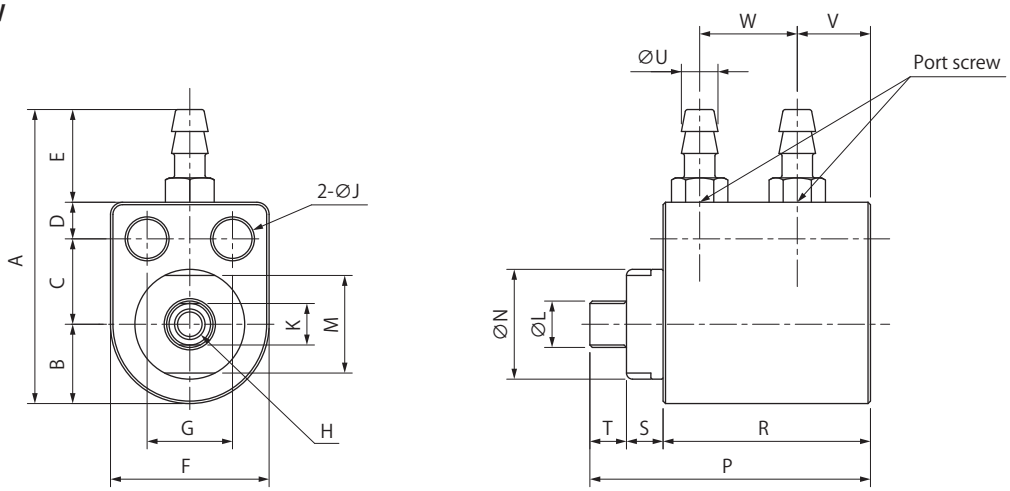

Model number	A	B	C	D	E	F	G	H	J	K	L	M	N	P	R	S	T	U	V	W	Port screw
TKY-W-4.5X3	21.6	5.5	6	2.5	7.6	11	6	M2×0.4 depth 3.5	2.7	2.6	3	7	8	20	14.6	2.4	3	3	5	6	M2.5
TKY-W-4.5X6																					
TKY-W-6X4	24.1	6.5	7	3		13	7	M2.5×0.45 depth 4		3.4	3.8	8	9	23	17	3			6	8	
TKY-W-6X8														27	21					12	
TKY-W-8X4	31	8	9		11	16	10	M3×0.5 depth 5	3.2	4.5	5.5	12	14	28		4		5	7	9	M5
TKY-W-8X8														30	23					11	
TKY-W-10X5	32	9				18	12			5	6	14	16	29	22				8	9	
TKY-W-10X10														33	26					13	

Model Change and Discontinued Models

Below products are discontinued items.
Please consult us for any details about replacement.

Model	Series	Situation	Description	Models for replacements	Year
CONVUM	CV	Discontinued	With C type switch	With CK type switch	98-01
CONVUM	CVA	Discontinued	CVA-DN (D is when mounted on CONVUM	CVA-DN (DN is when mounted on CONVUM)	98-01
CONVUM	CVA	Discontinued	Nozzle type 08,13	Nozzle type 10,15	98-01
CONVUM	CVD	Discontinued	All models	–	98-01
CONVUM	CVH	Discontinued	All models (without valve)	MCA series	98-01
CONVUM	CVH	Discontinued	All models (with valve)	–	98-01
CONVUM	CVL	Discontinued	All models	MCA series	98-01
CONVUM	CVJ	Discontinued	All models	MC22,MC72,SC1,SC3	98-01
CONVUM	All models	Discontinued	L (Max vacuum pressure -53.3) R (Supply pressure 0.35)	L (Max vacuum pressure -53.3) S (Supply pressure 0.5)	98-01
Switch	MVS	Model change	MVS-030AW	MVS-030AB	98-01
Switch	MVS	Discontinued	MVS-060	MPS-V23	98-01
Auto breather	DS	Discontinued	All models	–	98-01
Branch pipe	BP	Discontinued	BP-33,35,43,45	Reselect from current product	98-01
Filter	VF	Discontinued	VF-11・VF-11E・VF-11K	–	98-01
CONVUM	CVS	Discontinued	Models of without valve	–	98-01
Blow off valve	DS	Discontinued	DS-01A	DS-01AN	98-01
Vacuum switch valve	MPV	Discontinued	MPV・MPV2	MPV3	98-02
CONVUM	CVR	Discontinued	All models	SC3	98-06
Cylinder	TKU・TKB	Discontinued	All models	–	98-10
Setting screw	TN	Model change	TN-01	TN-PC-10-M5	99-05
Setting screw	TN	Model change	TN-02	TN-PC-30-M8	99-05
Setting screw	TN	Model change	TN-03	TN-PC-30-M6	99-05
Setting screw	TN	Model change	TN-04	TN-9C-90-M12	99-05
CONVUM	Valve terminal	Discontinued	Connector	Connector with light and surge voltage suppressor	99-10
Switch	MVS	Discontinued	MVS-070-1・2 (mmHg display)	–	99-10
Vacuum gauge	SG	Discontinued	SG-1・2・3	SG-4	99-10
Switch Assy		Model change	SS-5GL	CV-CK	99-10
Suction cup	PF-V	Discontinued	All models of valve built-in type	–	99-10
Suction cup	HD	Discontinued	All models of hand suction cup	–	99-10
Chaking center	TK	Discontinued	All models	–	99-10
Suction cup	Material	Model change	NBR	N	99-10
Suction cup	Material	Model change	Si	S	99-10
Suction cup	Material	Model change	FKM・Viton	F	99-10
Pressure sensor	MPS	Model change	ACC-3	MPS-ACCH3 (for silicon diaphragm)	00-07
Sensor	MPS	Model change	ACC-3	MPS-ACCH3 (for silicon diaphragm)	00-07
Branch pipe	BP	Discontinued	BP-3M (Block plug)	–	00-08
Suction cup	PEG	Discontinued	PEG-8NE/PEG-8SiE	PFG-8NE/PFG-8SE	01-06
Gripper	MF	Discontinued	All models	–	01-10
Air step	MRD・MAS	Discontinued	All models	–	01-10
Vacuum pump	VLT-6	Discontinued	All models	CRV	02-07
Vacuum pump	VLT60	Discontinued	All models	CRV	03-12
Pressure sensor	MVS-070	Discontinued	All models	MPS-V23	04-04
Pressure sensor	MPS-3	Discontinued	All models	MPS-35	07-10
Vacuum accessories	Air muffler	Discontinued	All models of AS	MPSL	07-10
Pressure sensor	MPS-31	Discontinued	All models	MPS-35	08-03
CONVUM	CVF	Discontinued	With tank	–	08-07
Pressure sensor	MVS-S	Discontinued	All models	–	09-01
CONVUM	CVA	Discontinued	All models	CVA2	09-03
CONVUM	MC7	Discontinued	All models	MC72	09-03
CONVUM	MC2	Discontinued	All models	MC22	09-09
CONVUM	MC3	Discontinued	All models	MC32	09-09
CONVUM	MC4	Discontinued	All models	MC42	09-09
CONVUM	MC5	Discontinued	All models	MC52	09-09
Vacuum switch valve	MPV4	Discontinued	All models	MPV42	09-09
Vacuum switch valve	VA01	Discontinued	All models	–	09-10
Pressure sensor	MPS-32	Discontinued	All models	MPS-35	09-10

Model	Series	Situation	Description	Models for replacements	Year
Pressure sensor	MPS-2	Discontinued	All models	MPS-23	09-10
Push-in connector	F	Discontinued	All models	WP/WP-C	10-01
Polyurethane tube	TE	Discontinued	All models	WU	10-01
CONVUM	CVK	Discontinued	All models	MC72,SC3（15 nozzle）	10-10
CONVUM	CVQ	Discontinued	All models	MC72,SC3（15 nozzle）	10-10
CONVUM	CVR2	Discontinued	All models	MC22,MC72,SC3	10-10
Cup with fitting	PFTH/YH	Discontinued	All models	NAPFTH/YH	10-12
Cup with fitting	PATH/YH	Discontinued	All models	NAPATH/YH	10-12
Cup with fitting	PQTH/YH	Discontinued	All models	NAPQTH/YH	10-12
Cup with fitting	PWTS/YS	Discontinued	All models	NAPWTH/YH	10-12
Cup with fitting	PRTS/YS	Discontinued	All models	NAPRTH/YH	10-12
Cup with fitting	PFTSM/YSM	Discontinued	All models	NAPFTS/YS	10-12
Cup with fitting	PATSM/YSM	Discontinued	All models	NAPATS/YS	10-12
Cup with fitting	PFTSB/YSB	Discontinued	All models	NAPUTSB/YSB	10-12
Cup with fitting	PFTKB/YKB	Discontinued	All models	PUTKB/YKB	10-12
Cup with fitting	PFGB	Discontinued	All models	PUTKB/YKB	10-12
CONVUM	CVM	Discontinued	All models	MC22,MC72,SC1,SC3	11-03
CONVUM	CVU	Discontinued	All models	CV4	11-03
CONVUM	CVS	Discontinued	All models	CVA2	11-03
CONVUM	CVG	Discontinued	All models	MC22,SC1,SC3	11-03
CONVUM	CVB	Discontinued	All models	Only CVB-09HSCK24BL can be supplied	11-03
CONVUM	CVE	Discontinued	All models	MC22,SC1,SC3	11-03
CONVUM	CVK2	Discontinued	All models	MC72,SC3（15 nozzle）	11-03
Vacuum switch valve	MPV3	Discontinued	With SGN・SGP・SCN sensor type	–	11-03
Pressure sensor	MPS-5	Discontinued	All models	–	11-03
Pressure sensor	MPS-6	Discontinued	All models	MPS-81	11-12
Suction cup	PF-B	Discontinued	All models	PU series	12-01
Pressure sensor	MPS-71	Model change	All models	–	16-07
Pressure sensor	MPS-74	Model change	All models	–	16-07
Pressure sensor	MPS-78	Model change	All models	–	16-07
Pressure sensor	MPS-9	Model change	Grommet type	Connector type	12-07
Pressure sensor	MPS-10	Model change	Grommet type	Connector type	12-07
Pressure sensor	MPS-9	Model change	All models	Change the button material to the rubber	16-04
Pressure sensor	MPS-10	Model change	All models	Change the button material to the rubber	16-04
F.R.L	MPC	Discontinued	All models	–	16-10
F.R.L	MPF	Discontinued	All models	–	16-10
F.R.L	MPW	Discontinued	All models	–	16-10
F.R.L	MPR	Discontinued	All models	–	16-10
F.R.L	MPL	Discontinued	All models	–	16-10
F.R.L	MPHS	Discontinued	All models	–	16-10
F.R.L	MPS1000M	Discontinued	All models	–	16-10
F.R.L	MPD	Discontinued	All models	–	16-10
Vacuum gauge	MPG	Discontinued	All models	–	16-10
Cylinder	EA	Discontinued	All models	–	16-10
Cylinder	EB	Discontinued	All models	–	16-10
Cylinder	EC	Discontinued	All models	–	16-10
Cylinder	ED	Discontinued	All models	–	16-10
Cylinder	EE	Discontinued	All models	–	16-10
Cylinder	EF	Discontinued	All models	–	16-10
Cylinder	EG	Discontinued	All models	–	16-10
Cylinder	EX-P	Discontinued	All models	–	16-10
CONVUM	MCV	Model change	All models of 05 nozzle	–	17-18
Pressure sensor	MPS-8	Discontinued	V,R range	MPS-81	17-11
Pressure sensor	MPS-8	Discontinued	P range	–	17-11
Pressure sensor	MPS-4	Discontinued	All models	MPS-42	18-02
Pressure sensor	MVS-035	Discontinued	All models	MVS-030（Without analog output）	18-06
Pressure sensor	MPS-33	Discontinued	All models	MPS-35	18-08
Suction cup	LFG	Discontinued	All models	Select from RA series	18-04
Suction cup	LJG	Discontinued	All models	Select from RA series	18-04

Product Index

You can search for page from the model number.

C

CCV	Miniature CONVUM	P.099
CH-01	Vacuum check valve	P.541
COP	Non-contact cup	P.585
COPS	Slim type non-contact cup	P.591
CORE	CORE for PJG cup	P.363
CV	Standard CONVUM	P.107
CVA2	Modular type CONVUM	P.117
CVA-V	Mechanical switch for CVA2 CONVUM	P.119
CVZ	Big vacuum flow CONVUM	P.151

E

EC1	Energy-saving mechanical CONVUM	P.129

F

FPV	Work pieces drop prevention check valve	P.533

H

HDV	High vacuum level CONVUM	P.143
HFV	High vacuum suction CONVUM	P.149
HFV-25M	High vacuum suction CONVUM with push-in connector	P.149

M

MC22	20mm width CONVUM	P.073
MC72	High vacuum flow CONVUM	P.085
MCA	Push-in connector CONVUM	P.135
MCV	Standard resin CONVUM	P.101
MKY	Miniature cylinder with push-in connector	P.613
MPS-10	Digital display pressure sensor with solenoid valve control	P.567
MPS-23	Digital display pressure sensor	P.555
MPS-35	Dual display 3 colors digital pressure sensor	P.549
MPS-9	Slim type digital display pressure sensor	P.561
MPV3	Vacuum switch valve unit	P.599
MS	Silencer for CONVUM	P.539
MVS-030	Electronic pressure sensor	P.579
MVS-201	Digital display pressure sensor with solenoid valve control	P.573

N

NAPAT/YH	PA series·cup with non-rotation spring fitting	P.195
NAPAT/YS	PA series·cup with spring fitting	P.189
NAPBT/YH	PB series·cup with non-rotation spring fitting	P.221
NAPBT/YS	PB series·cup with spring fitting	P.215
NAPCT/YH	PC series·cup with non-rotation spring fitting	P.245
NAPCT/YS	PC series·cup with spring fitting	P.239
NAPDT/YH	PD series·cup with non-rotation spring fitting	P.275
NAPDT/YS	PD series·cup with spring fitting	P.271
NAPFOT/YH	PFO series·cup with non-rotation spring fitting	P.319
NAPFOT/YS	PFO series·cup with spring fitting	P.315
NAPFT/YH	PF series·cup with non-rotation spring fitting	P.303
NAPFT/YS	PF series·cup with spring fitting	P.297
NAPHT/YH	PH series·cup with non-rotation spring fitting	P.333
NAPHT/YS	PH series·cup with spring fitting	P.329
NAPJT/YH	PJ series·cup with non-rotation spring fitting	P.357
NAPJT/YS	PJ series·cup with spring fitting	P.351
NAPNT/YH	PN series·cup with non-rotation spring fitting	P.419
NAPNT/YS	PN series·cup with spring fitting	P.411
NAPQT/YH	PQ series·cup with non-rotation spring fitting	P.445
NAPRT/YH	PR series·cup with non-rotation spring fitting	P.455
NAPUT/YSB	PU series·cup with spring fitting	P.473
NAPUT/YSBR	PU series·Cup with spring fitting with horizontal level retention function	P.479
NAPWT/YH	PW series·cup with non-rotation spring fitting	P.493

P

PAG	Cup with thin lip	P.179
PAT/YK	PA series・cup with fixed fitting	P.183
PBG	2 bellows cup	P.203
PBT/YK	PB series・cup with fixed fitting	P.207
PCD・PCDJ	Ring cup	P.253
PCD/J	PCD series・cup with fixed fitting	P.255
PCG	3 bellows cup	P.227
PCT/YK	PC series・cup with fixed fitting	P.233
PDG	Foam cup	P.261
PDH	PD series・holder for cup	P.263
PDT/YK	PD series・cup with fixed fitting	P.267
PDTM	PD series・cup with compact fixed fitting	P.265
PFG	Flat cup	P.279
PFOG	Flat cup with oil grooves	P.311
PFOT/YK	PFO series・cup with fixed fitting	P.313
PFT/YK	PF series・cup with fixed fitting	P.289
PHG	Deep cup	P.325
PHT/YK	PH series・cup with fixed fitting	P.327
PJG	2 bellows cup	P.337
PJT/YK	PJ series・cup with fixed fitting	P.345
PK2	High durability cup・flat type	P.367
PK2B	High durability cup・2 bellows type	P.373
PK2L	High durability cup・oval type	P.381
PL	PL series・cup with fixed fitting	P.393
PLG	Multiple bellows cup	P.391
PN	Cup for pouch film・cup with fixed fitting	P.431
PNG	Cup with thin lip	P.397
PNG-□B	2 bellows type cup for pouch film	P.429
PNT/YK	PN series・cup with fixed fitting	P.403
PPG	Cube cup	P.437
PPH	PP series・fitting for cup	P.439
PQG	Non-notation cup	P.443
PRG	Cup for round bar	P.449
PRT/YK	PR series・cup with fixed fitting	P.451
PS	PF series・cup with compact fixed fitting	P.285
PS-□-C	PC series・cup with compact fixed fitting	P.231
PS-□-J	PJ series・cup with compact fixed fitting	P.341
PSS-□-PAG	PA series・cup with compact spring fitting	P.187
PSS-□-PBG	PB series・cup with compact spring fitting	P.213
PSS-□-PCG	PC series・cup with compact spring fitting	P.237
PSS-□-PFG	PF series・cup with compact spring fitting	P.295
PSS-□-PJG	PJ series・cup with compact spring fitting	P.349
PUG	Swivel cup	P.461
PUGB	PU series・swivel cup	P.465
PUT/YKB	PU series・cup with fixed fitting	P.469
PWG	Oval cup	P.485
PWT/YK	PW series・cup with fixed fitting	P.489

R

RA	Mark free cup	P.497

S

SC1	Compact energy-saving CONVUM	P.035
SC2	High speed CONVUM	P.047
SC3	Medium size smart CONVUM	P.057
SM	Cup that can be detected by metal detector	P.499

T

TKY	Miniature cylinder with barb connector	P.615
TN	Setting screw	P.503

V

VF	Vacuum filter	P.523
VFL	Vacuum in-line filter	P.527
VFL-M5	Miniature vacuum in-line filter	P.531

Technical Terms

These terms based on Japanese Industrial Standard (JIS B 0142) , and Japan Fluid Power Association (JFPS).
Also, the symbol based on Japan Fluid Power Association (JFPS 2011) .

Technical Terms Related to Vacuum (JFPS 2010)

Terms	Definition
Vacuum system	System using the power of vacuum pressure to carry out a prescribed work task in combination with a series of devices.
Suction	Action of gripping or holding a workpiece by using the differing pressures of the atmospheric pressure and the vacuum pressure.
Vacuum circuit	Section that becomes vacuum pressure between the vacuum source and a device subjected to atmospheric pressure.
Vacuum break	Action of creating atmospheric pressure in the vacuum circuit of the vacuum system. Used in order to release the objects gripped by suction cups or suction plates. This is a method of increasing the pressure of the compressed air in order to release atmospheric pressure or to shorten the tact time as well as to blow-off gripped objects.
Venturi	Ejector that smoothly reduces or increases the flow. It uses the high speed low-static pressure at the nozzle for suction of other fluids and for fluid-flow measurement.
Vacuum pressure	Pressure that is lower than the atmospheric pressure.
Vacuum circuit volume	Volume that becomes the vacuum pressure between the vacuum source and a device subjected to atmospheric pressure.
Fluid	Fluid that is used by the vacuum system or the device.
Nominal pressure	Pressure set for a specific condition in order to ensure a certain capacity, or the basic pressure for a certain design or usage.
Operating pressure	Pressure that is actually used for a vacuum system or device.
Maximum operating pressure	Maximum pressure is the pressure that makes possible the use of a vacuum system or a device.
Ambient temperature	Ambient temperature is the temperature surrounding area where the vacuum system or a device is in use.
Vacuum pump	Device that sucks air from the vacuum circuit and lets it out to the atmosphere in order to create vacuum in the circuit.
Reciprocating vacuum pump	Pump that uses diaphragms or pistons in a reciprocating movement to create volume change that generates vacuum.
Rotary vacuum pump	Pump that generates vacuum by creating a volume change between the rotor and its casing.
Vacuum ejector	Pump that blows a high-speed jet through the center of the nozzle of the diffuser so that other fluids are sucked into the diffuser in order to generate vacuum.
High vacuum level ejector	Vacuum ejector with which it is possible to generate a high maximum vacuum level.
High flow vacuum ejector	Vacuum ejector with which it is possible to attain a high suction flow.
Multi-stage vacuum ejector	Combination of multiple vacuum ejector nozzles used to generate the required maximum vacuum pressure or suction flow.
High vacuum multi-stage ejector	Combination of multiple vacuum ejector nozzles at the suction port and the exhaust port in a series used to generate a high maximum vacuum pressure.
High flow multi-stage ejector	Vacuum ejector with a combination of multiple diffusers in a series in order to attain a greater suction flow.

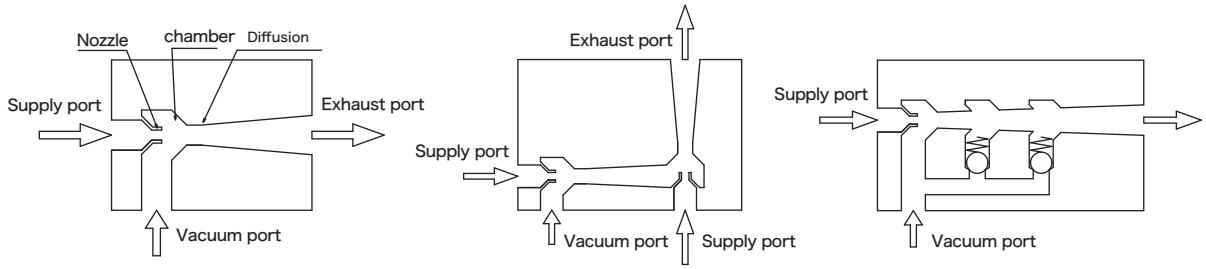

Vacuum ejector　　High vacuum multi-stage ejector　　High flow multi-stage ejector

Technical Terms Related to Vacuum (JFPS 2010)

Terms	Definition
Diffusion chamber	Narrow section of the entry port of the diffuser in the vacuum ejector. The mixture (diffusion) required for suction is generated in this section.
Supply port	Entry port for compressed air to the vacuum ejector.
Vacuum port	Connection port to the vacuum circuit of the vacuum ejector.
Diffuser	The flow path slows down the air speed of the diffuser chamber's downstream in the vacuum ejector, and after recovery of the pressure it releases the air into the atmosphere and smoothly increases the pressure.
Exhaust port	Exhaust port where compressed air supplied to the vacuum ejector and suctioned air is let out.
Nozzle	Flow path section that converts the compressed air pressure supplied to the vacuum ejector into a high-speed flow.
Nozzle diameter	Diameter of the circular nozzle's smallest cross-section of the vacuum ejector.
Supply pressure	Air pressure supplied to the supply port of the vacuum ejector.
Air consumption	Volume of compressed air consumed by the vacuum ejector.
Suction flow	Volume of air suctioned by the vacuum ejector.
Maximum vacuum pressure	Maximum vacuum pressure generated at a certain supply pressure when the suction port of the vacuum ejector is closed.
Time to reach the set vacuum level	When supplying air to the vacuum ejector, this is the time it takes to reach the vacuum pressure that has been set for a certain vacuum circuit volume.
Air consumption characteristics	Characteristics that show the relationship between the vacuum ejector's supply pressure and air consumption.
Maximum vacuum (air) flow	Characteristics that show the relationship between the vacuum ejector's supply pressure and the maximum suction volume.
Maximum vacuum pressure characteristic	Characteristics that show the relationship between the vacuum ejector's supply pressure and the maximum vacuum pressure.
Suction flow-vacuum pressure characteristic	Characteristics that show the relationship between the vacuum ejector's suction volume and vacuum pressure at a certain supply pressure.
Suction cup	Device used to grip by suction; mainly a cup of elastic rubber or a dish shaped suction section provided with a fitting. Suction cups can be thin, deep, oval, round, and they can also have bellows, etc.
Suction plate	Device used for gripping through suction. Mainly used for handling stiff workpieces with flat or curved surfaces such as metal plates with grooves and porous workpieces. Used to handle objects that are easily deformed.
Lifting	Lifting of objects by using suction cups or suction plates.
Vertical lift	Lifting objects in a vertical direction by using suction cups, generating a shear force towards the gripped surface.
Horizontal lift	Lifting objects in a horizontal direction.

Vertical lift

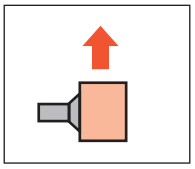

Horizontal lift

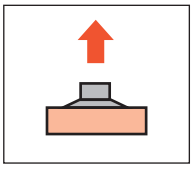

Buffer	Device used to absorb fluctuations caused mainly by the pressure of suction cups with springs, etc., and to lower the impacts.
Swivel suction cup	Suction cup provided with swivel link between the suction point and the main body.

Technical Terms

Technical Terms Related to Vacuum (JFPS 2017)

Terms	Definition
Porous	Porous objects are those that have numerous pores.
Cup diameter	Diameter of a round suction cup when no vacuum pressure is generated at contact with an object.
Effective cup diameter	Diameter of a round suction cup when vacuum pressure is generated and actual contact has been established with an object.
Suction surface	Theoretical surface of the suction cup calculated in regard to the cup diameter when vacuum pressure is applied to a surface.
Effective suction surface	Area occupied by a suction cup when vacuum pressure is generated and actual contact has been established with an object.
Lifting force	Load with which an object can be lifted with a suction cup or suction plate.
Theoretical lifting force	Theoretical load with which an object can be lifted depending on the suction area of the suction cup and the vacuum pressure.
Open area rate	Open area ratio of a porous surface. Normally expressed in percentage.
Porosity	Percentage of pores in the total area of a porous surface. Normally expressed in percentage.
Vacuum ejector unit	Basic structure of a vacuum ejector and its peripheral devices. Consists of a combination of a vacuum ejector, vacuum generation valve, vacuum break valve, vacuum pressure valve, vacuum filter, etc.
Blow-off valve	Blow-off valve supplies compressed air to the vacuum circuit in order to break the vacuum.
Vacuum generation valve	Valve that supplies the vacuum ejector with compressed air.
Vacuum gauge	Instrument that measures and indicates the vacuum pressure.
Vacuum filter	Filter that is installed between the vacuum pump, suction cups, etc., and equipment subjected to the atmosphere in order to protect the vacuum pump from foreign matters and pollutants.
Vacuum regulator	Installed between the vacuum source and the vacuum circuit in order to regulate and keep a constant pressure in the vacuum circuit.
Vacuum switch	Device that uses vacuum pressure to open and close the electric contact (circuit). Used to confirm the condition of vacuum suction.
Blow-off operational pressure	Supplies compressed air to the vacuum circuit and works as supply pressure to break the vacuum.
Blow-off flow	Airflow required to generate vacuum break.

Technical Terms Related to Vacuum (JFPS 2017)

Terms	Definition
Pressure switch	Device that opens and closes the electric contact (circuit) when the set fluid pressure value (threshold) is attained.
Pressure sensor	Device that outputs an electric signal that is proportional to the fluid pressure.
Mechanical pressure switch	Pressure switch that has a mechanical pressure detection facility.
Electronic pressure switch (Sensor)	Pressure switch that has a semiconductor pressure detection facility. Also called pressure sensor.
Separate type pressure sensor	Electronic pressure sensor with a separate pressure detection facility and pressure display.
2-colour display pressure switch (sensor)	Pressure switch that displays in two colors the set pressure range and the digital pressure outside of the set pressure.
Digital display pressure switch (sensor)	7-segment LED pressure switch (sensor) that detects the pressure using a numeric display.
Operating fluid	Medium that can be used (measured).
Nominal pressure	Pressure under which performance under a specified condition is possible. Standard pressure for design and operation.
Operating pressure range	Pressure range in which it is possible to set the threshold value of the pressure switch.
Proof pressure	Pressure that proofs that no damage or lowered performance will occur when returning to maximum operating pressure.
Burst pressure	Pressure at which the function is permanently impaired.
Ambient temperature	Temperature range within which operation is possible.
Storage temperature	Temperature range within which the device may be stored.
Ambient humidity	Humidity range within which operation is possible.
Output type	Type of output signal of a pressure switch (sensor). There are the three types of switch output, analogue output and digital output.
Switch output	Electric contact output that switches ON or OFF when the detected pressure reaches the set pressure. There are the two types of contact output and transistor output.
Analog output	Electric signal output that is proportional to the detected pressure. There are the two types of voltage output and current output.
Digital output	Numerical signal output that is proportional to the detected pressure.
Hysteresis mode	Method to set operating pressure and hysteresis of electronic pressure switches (sensors). A device is switched ON (OFF) at operation pressure and OFF (ON) at a pressure that is lower than the pressure within the hysteresis.
Window comparator mode	Method to set the upper limit and lower limit of the detection pressure of electronic pressure switches (sensors). When the pressure is within a certain range, the device is switched ON (OFF), and turned OFF (ON) when the pressure is outside of that range.

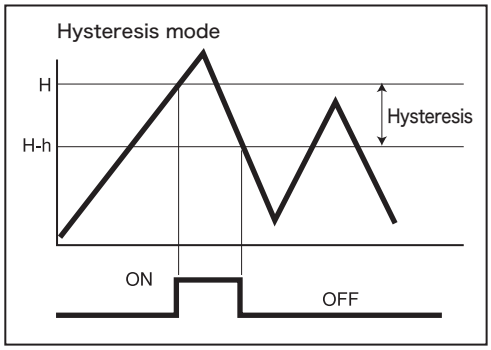

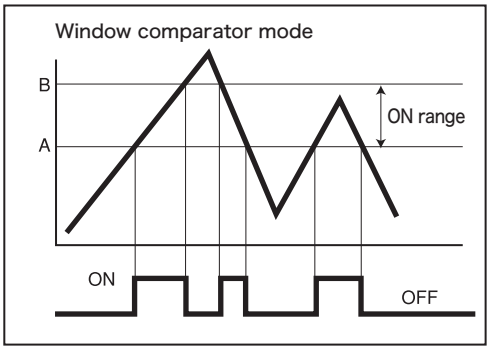

Technical Terms

Technical Terms Related to Vacuum (JFPS 2017)

Terms	Definition
Response time	Time that it takes to output after the pressure has reached the threshold value.
Hysteresis	Difference between the working pressure and the pressure after raising or lowering it with the pressure switch (sensor) (ON or OFF), and returning the pressure switch (sensor) (ON or OFF).
	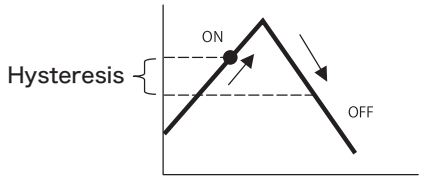
Voltage supply	Voltage that is applied to the power source wiring. The voltage range or rated voltage is displayed, and when required, this also includes the ripple condition.
Load current	Maximum current value that flows through the output line when load (resistance load) is applied to the contact point.
Load voltage	Maximum voltage at which the contact point can open and close. Normally the voltage applied to the load side is displayed.
Current consumption	Current required to drive the pressure switch (sensor). However, the load current is not included.
Leakage current	Current that flows to the output line when the output circuit of the pressure switch (sensor) is opened.
Internal voltage drop	Voltage drop of the output when the output circuit of the pressure switch (sensor) closes.
Noise resistance	Maximum electric noise when the pressure switch (sensor) works normally.
Electric voltage resistance	Voltage between exposed electrified and non-electrified parts that can withstand the tests determined by JIS C 8305 in regard to tests methods for wiring devices.
Insulation resistance	Resistance between exposed electrified and non-electrified parts measured in accordance with JIS C 8305 in regard to tests methods for wiring devices.
Circuit protection	Circuit that protects the internal elements in case of applied over voltage due to reversed connection or over-current.
Display resolution	Minimum change in a readable display.
Repeatability	Fluctuations in operation output when repeatedly increasing or decreasing the pressure under certain conditions.
Display accuracy	Fluctuations in values displayed by the product in comparison to the true pressure.
Temperature characteristic	Amount of change in temperature in comparison to the standard temperature characteristics. Generally expressed in percentage (%) in comparison to the full-scale detection pressure. However, the standard temperature and temperature range are specified.
Vibration resistance	Maximum vibration acceleration when the pressure switch (sensor) works normally.
Shock resistance	Maximum shock acceleration when the pressure switch (sensor) works normally.
IP protection	Protection class for dust protection, water-proof structures in accordance with IP codes specified in JIS C 4003(IEC 60529).

CONVUM

Myotoku Ltd.

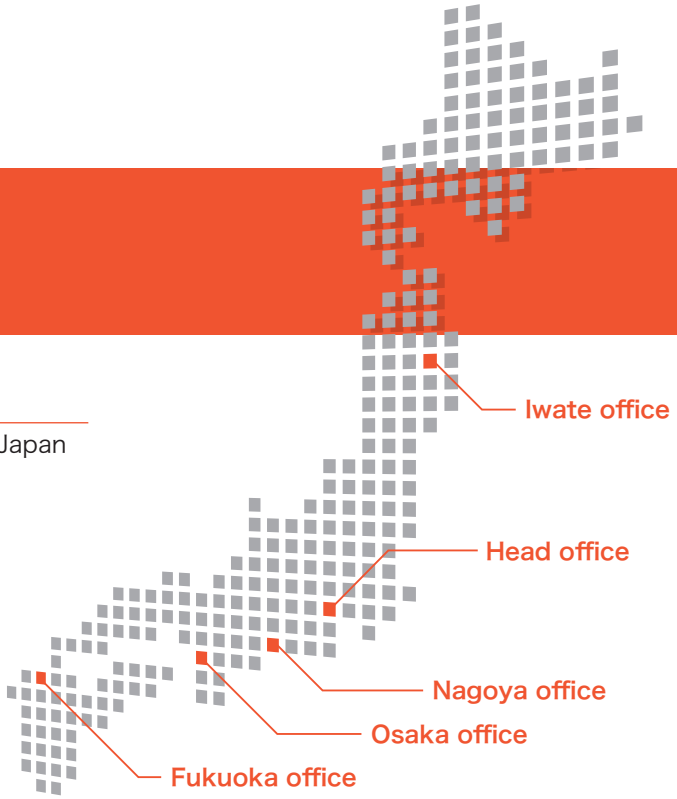

Head Office

2-6-18 Shimomaruko, Ohta-ku, Tokyo 146-0092, Japan
TEL : 81-3-3759-1491
FAX : 81-3-5741-7020
https://www.convum.co.jp/en

Manufacturing Plant

Iwate Office
Esashi core industrial park, 10-5 Matsunagane,
Iwayadou, Esashi, Oshu, Iwate 023-1101, Japan
TEL : 81-197-35-0480
FAX : 81-197-35-1022

Contact Us

E-mail : myotoku_inquiry@convum.co.jp

2-6-18 Shimomaruko, Ohta-ku, Tokyo 146-0092, Japan
TEL : 81-3-3759-1491
FAX : 81-3-5741-7020

8F Nanba Muromachi Building, 1-12-5 Nanbanaka, Osaka Naniwa-ku, Osaka 556-0011, Japan
TEL : 81-6-6647-6710
FAX : 81-6-6647-6720

Sales Office

Hokkaido and Tohoku area
Esashi core industrial park, 10-5 Matsunagane, Iwayadou, Esashi, Oshu, Iwate 023-1101, Japan

Shin-Etsu Kanto area
2-6-18 Shimomaruko, Ota-ku, Tokyo 146-0092, Japan

Chubu and Hokuriku area
#502 Meiekiminami Building 2, 4-8-17 Meiekiminami, Nakamura-ku, Nagoya, Aichi 450-0003, Japan

Kinki area
8F Nanba Muromachi Building, 1-12-5 Nanbanaka, Osaka Naniwa-ku, Osaka 556-0011, Japan

Shikoku and Kyushu area
#203 Toyo Mansion Ekinan Star Office, 2-8-16 Hakataekiminami, Hakata-ku, Fukuoka 812-0016, Japan

※ The office name, address may change without prior notice, please also check our web site [https://www.convum.co.jp/en] .

Group company

MYOTOKU CONVUM CHINA CO., LTD
Shanghai office
4/FC, 16# Building, 129 Fute, North Road, Waigaogiao, F.T.Z. Shanghai, 200131
TEL：86-21-52712075
FAX：86-21-52712073
https://www.convum.co.jp/zh/

CONVUM KOREA CO.,LTD.
Seoul office
1204, KCCWELLTZ VALLEY, 205, Gasan Digital, 1Ro, Geumchen-gu, Seoul, 08501
TEL：82-2-6111-8007
FAX：82-2-6111-8006
https://www.convum.co.jp/ko/

CONVUM(THAILAND) CO.,LTD.
818/46 Udomsuk Road, Bangna-Nuea, Bangna , Bangkok 10260
TEL：66-2-769-5851
FAX：66-2-769-5853
https://www.convum.co.jp/th/

CONVUM USA,INC.
13105 Ramona Blvd. Suite I, Irwindale CA 91706
TEL：1-626-338-4312
FAX：1-626-338-4497
https://www.convum.co.jp/en/

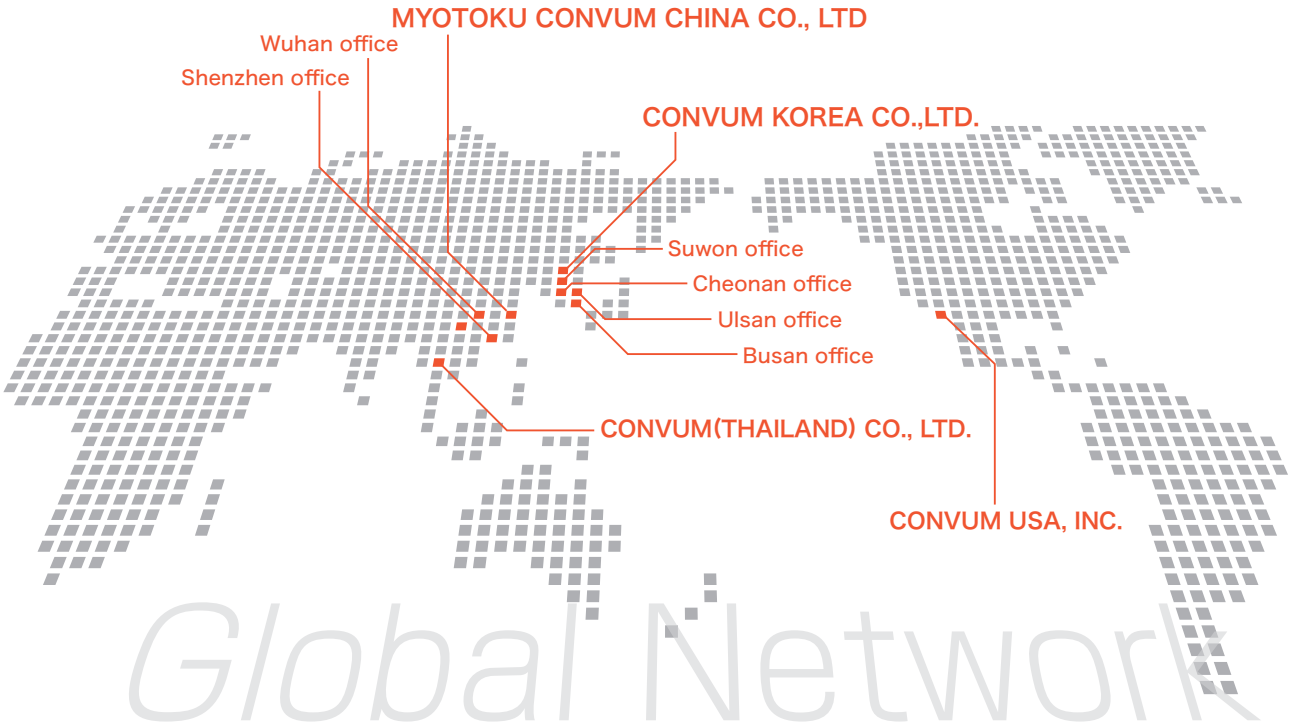

※ Specifications may change without prior notice.

Myotoku Ltd.

www.convum.co.jp